Back to Contents

SECOND NOTICE OF DEFICIENCIES (NOD)
HWMA/RCRA PART B PERMIT APPLICATION, VOLUME 14
FOR STORAGE AND TREATMENT UNITS AT THE
IDAHO NUCLEAR TECHNOLOGY AND ENGINEERING CENTER (INTEC)
LIQUID WASTE MANAGEMENT SYSTEM (ILMWS)
IDAHO NATIONAL ENGINEERING AND ENVIRONMENTAL LABORATORY
EPA ID No. ID4890008952

The following list of deficiencies was compiled by the Idaho Department of Environmental Quality (DEQ). The list identifies deficiencies found in Volume 14, Revision 1, Books 1 through 4 of the INEEL Part B Permit Application. While a specific form for a Permit Application does not exist, the list of deficiencies is organized in accordance with the RCRA Part B Checklist.

GENERAL COMMENTS

1. It appears that not all of the waste streams managed by the ILWMS have been identified in the response to NOD #1 or the first paragraph of Section C-1. If the list of "typical waste streams" is not complete, the revised Part B Permit Application must include the rest of the waste streams. Otherwise, the Department of Energy (DOE) must demonstrate that the list is representative of the wastes managed by the ILWMS.

RESPONSE:

The list of waste streams managed by the INTEC Liquid Waste Management System (ILWMS), provided in the response to the first Notice of Deficiency (NOD), represents all wastes currently treated in that system. However, other waste streams not currently identified may be processed by that system in the future, provided that they meet the ILWMS waste acceptance criteria and process tolerance limits identified in Sections C-2a(1) and D-8b(5) of this Part B Permit Application.

The first paragraph of Section C-1 of the Permit B Permit Application was revised to read as follows:

> "The INTEC units described in this permit application are used to manage a variety of wastes generated from INEEL activities. Waste streams managed by the ILWMS include:
>
> - Liquids generated incidental to conducting debris treatment, decontamination, and descaling activities on INEEL equipment, piping, and valves
> - Rain water and snow melt that infiltrate into sumps and other containment areas
> - Water from radioactive fuel storage basins and pools
> - Mop water and other cleaning liquids generated incidental to cleanup activities conducted in radiological areas
> - Analytical residues, excess samples, and expired analytical standards generated by sampling and analytical laboratory activities

- Solutions from preventative maintenance and corrective maintenance leak tests on process piping and valves
- Aqueous service wastes, such as steam condensate
- ILWMS treatment residuals that may require further processing
- Other waste streams not currently identified that conform to the ILWMS waste acceptance criteria and process tolerance limits identified in Sections C-2(a)(1) and D-8(b)(5), respectively."

2. DOE has not sufficiently addressed the requirements in IDAPA 58.01.05.008 and .012 [40 CFR §§ 264 Subpart AA and 270.24]. In addition to the process vents associated with the deep tanks, evaporators, and fractionators, the revised Part B Permit Application must include all sparged tanks (continuous or intermittent) equipped with process vents. The regulations in IDAPA 58.01.05.008 [40 CFR 264 Subpart AA] do not differentiate whether a process vent emits continuously or intermittently. The Part B Permit Application, Revision 1, has also failed to demonstrate whether the cumulative organic emissions from all affected process vents can be maintained below 3 lb/hr or 3.1 tons/yr. This limit cannot be exclusively utilized for a single vent. DOE must revise the total organic emission determination.

RESPONSE:

The only process vent associated with the units identified in the Part B Permit Application is the INTEC main stack. The tanks included in the ILWMS are not equipped with process vents. Instead, emissions from these units are vented to either the Vessel Offgas System and/or the Process Offgas System, which eventually lead to the INTEC main stack.

The only sources of volatile and semi-volatile organics managed by the ILWMS are small quantities of laboratory wastes that are discarded to the CPP-601 Deep Tanks. Engineering Design File (EDF)-2432 was prepared and included as Attachment 1 to the first NOD response, which was submitted to the DEQ in December 2002. This EDF reviewed the inventory of organics sent from CPP-602, CPP-630, and CPP-684 to the Deep Tanks and determined that although the organic concentration in the Deep Tanks may exceed 10 ppmw, making 40 CFR 264 Subpart AA applicable to this system, associated emissions of volatile organic compounds (VOC) are much less than 3 lb/hr and 3.1 tons/yr.

Other INTEC processes may generate small quantities of non-volatile organics that are also managed by the ILWMS. These non-volatile organics are primarily generated through decontamination and debris treatment activities in CPP-659. Decontamination activities elsewhere at the INTEC may result in the discharge of additional small quantities of non-volatile organics to the ILWMS.

A review of the INEEL Chemical Management System for the past five years indicates that the following quantities of non-volatile organics are routinely managed in the ILWMS on an annual basis. Material Safety Data Sheets for these products are included as Attachment 1 to this NOD response.

- Alkaline Rust Remover (> 60% sodium hydroxide, 10-20% triethanolamine, 1-10% sodium gluconate, 1-10% diethanolamine); 600 lbs/yr

- Oxalic Acid (99.6% oxalic acid, 0.4% inert salts); 58 lbs/yr
- Radiacwash (> 85% mineral water, 6 % octylphenol, 5.7 % tetrasodium ethylenediamine, 2.9% citric acid); < 4 gal/yr
- Small quantities of oil/grease from decontamination/debris treatment of equipment.

The only sources of volatile and semi-volatile organics to the ILWMS are the Analytical Laboratories, via the CPP-601 Deep Tanks. EDF-2432, previously submitted, conservatively assumes that organics volatilize immediately and completely upon introduction to the Deep Tanks and determined the organic emissions to be 0.035 ton/yr, approximately two orders of magnitude lower than the 3.1 tons/yr limit. By assuming complete volatilization of organics in the Deep Tanks, this value includes any potential emissions that could occur from the Process Equipment Waste Evaporator (PEWE) or Liquid Effluent Treatment and Disposal (LET&D) facilities.

Because the New Waste Calcining Facility (NWCF) Evaporator Tank System (ETS) is considered a segment of the ILWMS treatment train and will be added as a modification to the final permit, its contribution to the overall emission of organics must also be considered. Included as Attachment 2 to this NOD response is "NWCF Evaporator Tank System 2001 Offgas Emissions Inventory," INEEL/EXT-02-00198, February 2002. This report provides offgas and liquid stream characterization of the ETS while processing typical wastes from the Tank Farm Facility during May and June, 2001. The analytical results from the offgas sampling event indicate that the hourly total emissions rate for all volatile and semi-volatile organic emissions was less than 0.02 lbs/hr or less than 0.09 ton/yr. Thus, the combined contributions from all units that manage volatile and semi-volatile organics in the ILWMS = 0.035 ton/yr + 0.09 ton/yr = 0.125 ton/yr. This value is considerably less than the 3.1 tons/yr limit prescribed in 40 CFR Part 264 Subpart AA.

3. The Risk Assessment of Potential Hazardous Air Pollutant Emissions from the ILWMS (Attachment 2, Book 1 of 4, Part B Permit Application) does not satisfy the requirements of IDAPA 58.01.05.008 [40 CFR § 264.601]. This regulation requires that permits for miscellaneous units contain such terms and provisions as necessary to protect human health and the environment. Unlike other hazardous waste management units that have technology based performance criteria (e.g., incinerators or landfills), the permit conditions and performance standards for miscellaneous units are based on the risk assessment and engineering judgment. A combination of [40 CFR §§ 264.601 (c) and 264.601(c)(5)] reads as follows:

> "Prevention of any releases that may have adverse effects on human health or the environment due to waste migration in the air considering the existing quality of the air, including other sources of contamination and their cumulative impact on the air."

Fugitive emissions from fixed sources and stationary emission sources, regardless of their status under HWMA, must be considered under this regulation.

The impact of sources and their cumulative impact are to be assessed on a site by site (or area by area) basis. At some facilities, it may be that adding the separate screening level risk assessments is the most efficient means to consider the cumulative risk. At other facilities, it may be necessary to conduct a complex assessment of cumulative risk, evaluating realistic and/or actual (e.g., background) emission scenarios.

Considering the complicated nature and variables associated with the INEEL, DEQ recommends that the DOE develop a risk assessment work plan to support evaluation of cumulative impacts from emission sources. At a minimum, the work plan should identify the following:

1. Sources of contamination to be included in the risk assessment;

2. The air dispersion model to be used;

3. Exposure models, both human receptor scenarios and ecological receptors, to be evaluated;

4. Emission estimates for each contaminant from each emission source;

5. Meteorological data to be included in the dispersion model;

6. Toxicity data for each chemical identified in the emissions estimate;

7. Proposed human health protectiveness criteria for both carcinogenic and non-carcinogenic risks; and,

8. Proposed ecological protectiveness criteria.

In order to avoid unnecessary protraction of the permitting process, DEQ is strongly suggesting that the work plan be approved prior to actual assessment of risk.

RESPONSE:

Per 40 CFR § 264.601, miscellaneous units must be located, designed, constructed, operated, maintained, and closed in a manner that will ensure protection of human health and the environment. Protection of human health and the environment includes prevention of releases due to migration of waste constituents in the groundwater, surface water, or air.

Protection of groundwater and surface water are ensured since Buildings CPP-604, CPP-641, CPP-649, CPP-659 Annex, CPP-1618, and CPP-601 are fully enclosed buildings equipped with secondary containment and leak detection devices to prevent the release of hazardous and mixed waste constituents. Sections F-4b and F-4c of the Part B Permit Application provide information regarding protection against runoff and contamination of water supplies. This response specifically addresses an evaluation of the impacts to the air from operation of the ILWMS.

Based on discussions with the DEQ on May 21, 2003, "Risk Assessment of Potential Hazardous Air Pollutant Emissions from the INTEC Liquid Waste Management System," submitted as Attachment 2 to the first NOD response for Volume 14 in December 2002, is considered to be adequate for addressing incremental human health impacts for the public from ILWMS releases. This assessment calculates individual contaminant risk and hazard quotients (HQ) using risk or HQ per unit release factors determined from the New Waste Calcining Facility (NWCF) Screening Level Risk Assessment (SLRA). This method is technically appropriate if: 1) the ILWMS has the same source release geometry (e.g., stack height, flow rate) as that modeled for the NWCF SLRA; 2) the meteorological data used in the NWCF SLRA modeling are appropriate for the ILWMS; and 3) the exposure scenarios evaluated in the NWCF SLRA are appropriate for the ILWMS. All three of these conditions were evaluated and determined to be consistent for the ILWMS. Therefore, the method of calculating ILWMS impacts from NWCF impacts on a

contaminant-specific basis is a technically appropriate method for risk assessment of the ILWMS emissions.

Ecological risk assessments use modeled soil concentrations as a starting point for calculating impacts to ecological receptors. Modeled soil concentrations for specific contaminants are directly proportional to the contaminant release rates for a given time of exposure. Based on this, and conditions 1-3 described above, ecological impacts for the ILWMS may be calculated in the same manner as human health effects, i.e., multiplying the ecological receptor HQ per g/s released from the NWCF Screening Level Ecological Risk Assessment (SLERA) by the ILWMS contaminant emission rates and then summing the HQs to obtain a total hazard index (HI).

Per 40 CFR § 264.601(c)(5), only sources that release pollutants to the air will be evaluated for "their cumulative impact on the air." The evaluation will exclude incremental impacts from non-air pathway sources (e.g., exposure via soil ingestion or absorption directly from buried solid waste). For the INEEL CERCLA Disposal Facility (ICDF), this would include the airborne emissions calculated in the Short-term Risk Assessment. It would not consider the impacts calculated for ecological receptors in the Screening Level Ecological Risk Assessment (SLERA) for the ICDF, because these impacts were calculated based on direct exposure to calculated design inventory landfill waste concentrations, without transport to the air. Further, the impacts calculated in the ICDF SLERA are not appropriate for use in this evaluation because the ICDF SLERA used very conservative (maximum design inventory) landfill waste concentrations and specifically states that the analysis was developed to support facility design only and should not be used to approximate actual site conditions.

A revised risk evaluation for ILWMS emissions is proposed, which will include the following:

1. A summary of the human health and ecological risk calculations from ILWMS emissions using the above-described methods.

2. Discussion on the relative importance of evaluating cumulative impacts on human health for determination of ILWMS permitting. The human impacts from ILWMS emissions (risk = 7E-08 and HI = 0.0024) are less than 1/100 (< 1%) of the currently used human health criteria for RCRA risk assessments (1E-05 risk or 0.25 HI). The potential ecological impacts are also likely a very small fraction of the accepted ecological criteria based on the results of the NWCF SLERA and the fact that the ILWMS emission rates are much smaller than the NWCF emission rates. Assessment of incremental impacts from existing sources becomes much less important when the impacts from the source evaluated are very small compared to acceptable impact criteria. When the impacts from the incremental source are 1% or less of the criteria, evaluation of existing source impacts has two likely outcomes: 1) the impacts from the existing sources will not increase the cumulative impacts beyond the criteria; or 2) the impacts from the incremental source will not appreciably change the existing air quality. For example, if the existing ambient air quality results in a risk of less than or equal to 9.8E-06 (slightly less than the risk criteria of 1E-05), adding in the ILWMS risk (7E-08) gives a cumulative risk of 9.9E-06; still less than the risk criteria. If the existing air quality results in a risk of 1E-05 or greater (greater than or equal to the risk criteria), adding in the ILWMS risk gives a cumulative risk of 1.007E-05 (or less). This is quantitatively the same value as the existing air quality risk within 2 significant figures, which is the maximum number normally justified given the uncertainty in the risk assessment process.

3. Summary of ICDF cumulative impacts on human health. One of the major sources of concern relating to cumulative impacts with the ILWMS is the ICDF, which is currently

being constructed just southwest of the INTEC fence line. The maximum human health impacts to the public calculated for this facility (ICDF Short-term Risk Assessment) using very conservative (maximum design inventory) assumptions were determined to be low enough (≤ 3E-08 risk and ≤ 0.01 HI) that their cumulative impacts with the ILWMS emissions are well less than the risk criteria (7E-08 + 3E-08 = 1E-07). The cumulative HI from the ICDF and ILWMS would be ≤ 0.0124, far less than the 0.25 HI criteria. These cumulative impacts will be summarized. No additional human health risk assessment is planned for ICDF.

4. Area screening for cumulative ecological impacts. Cumulative impacts from ILWMS and existing sources may become an issue for on-site ecological impacts because of the much closer proximity of the receptors to the sources (right outside facility fence lines). To address this concern, screening modeling of existing sources will be performed to determine the INEEL facilities whose plumes significantly overlap with the ILWMS (INTEC main stack) plume. For this initial modeling, the following five areas will be evaluated: 1) INTEC main stack; 2) ICDF ground-level releases (from the landfills and evaporation ponds); 3) TRA; 4) CFA; and 5) RWMC. These facilities were selected based on their location within the INTEC main stack plume footprint determined in the NWCF SLRA. For this initial screening modeling only, TRA, CFA, and RWMC will be evaluated using a single 10-m high centrally located point source (this is reasonable given the lack of a single large source at these facilities and their relatively large distance from the INTEC maximum impact location, located approximately 1 km southwest of INTEC). The latest EPA version of the ISC3 model will be used for the modeling with 5-years of National Oceanic and Atmospheric Administration (NOAA) meteorological data from the Grid 3 tower, located 2-km north of INTEC. Unit release annual average air concentration will be modeled and plotted (as isopleths). If a facility contributes less than 10% of the total relative air concentration (from all sources) at the ILWMS maximum on-site impact location (located outside area fence lines), then that facility will be excluded from further analysis (its plume dispersion pattern does not significantly overlap that from the ILWMS). If a facility contributes more than 10% of the total relative air concentration at the ILWMS maximum impact location (located outside area fence lines), then refined modeling will be done for quantified sources at that facility using actual source characteristics (e.g., location, release height, flow rates).

5. Evaluation of cumulative ecological impacts from contributing sources. If a facility contributes 10% or more of total impact at the ILWMS maximum impact location using the above screening modeling, the following additional analyses will be performed to evaluate cumulative ecological impacts at the maximum impact location for the INTEC main stack (same as that modeled for NWCF):

   - Emissions from the ILWMS and contributing sources will be evaluated for pollutants with existing emissions rate data (either calculated or measured) and reliable toxicological data. Radionuclides will not be evaluated.

   - Cumulative deposition rates from contributing facilities will be calculated using the ISC3 model.

   - Cumulative soil concentrations will be calculated using approved EPA human health risk assessment guidance.

   - Ecological impacts will be assessed using HQs calculated by dividing the modeled soil concentrations by ecologically-based screening levels (EBSLs), as described in the

"Guidance Manual for Conducting Screening Level Ecological Risk Assessments at the INEL," INEL-95/0190, 1995. The HQs will then be summed across all pollutants to obtain an HI. This method was used in both the NWCF and ICDF SLERAs.

- The proposed ecological protectiveness criterion for initial screening of impacts is an HI of 1.0. An HI of 1.0 is considered appropriate because of the conservative nature of the EBSL approach and because this assessment takes into account cumulative impacts.

- A qualitative uncertainty analysis will be included which discusses the uncertainty associated with ecological modeling assumptions and parameters values used in the assessment.

6. For certain pollutants (e.g., mercury), existing measurements may be used in lieu of modeled concentrations for existing source impacts if the model predictions show unacceptable impacts.

Upon receipt of DEQ concurrence with the approach presented above, the INEEL will complete the risk evaluation proposed. Transmittal of the final certified report to the DEQ is anticipated within 270 calendar days after receipt of concurrence.

SPECIFIC COMMENTS

C. WASTE CHARACTERISTICS

4. DEQ does not concur with the response to NOD #24. The PEWE and LET&D are mixed waste treatment units. While DEQ does not regulate the radioactive component of the waste, DOE is requesting alternate handling and sampling of the waste due to radiation concerns. DEQ cannot evaluate the validity of these requests without information on the radiological component (e.g. isotopes, hazards associated with radioactive materials, etc.) of the waste. Thus, information on the radiological component of the waste must be included in the revised Section C of the Permit Application.

RESPONSE:

The following description was added after the second paragraph of Section C-1 of the Part B Permit Application:

"Radionuclides that contribute the majority of the activity for wastes managed in the ILWMS include Y-90, Sr-90, Cs-137, Ba-137m, Pu-238, Sm-151, Pu-241, Pm-147, Eu-155, Eu-154, Pu-239, Am-241, Co-60, Ni-63, Cs-134, Sb-125, H-3, Pu-240, Tc-99, Cd-113m, Te-125m, Pa-233, Np-237, Eu-152, Zr-93, Cm-244, Fe-55, Nb-93m, Nb-94, Ru-106, Rh-106, Cs-135, U-234, Ce-144, and Pr-144. Units that comprise the ILWMS are capable of handling high-level, transuranic, and low-level radioactive wastes. Activities of typical wastes range from <20 nCi/g to 50,000 nCi/g. The exposure rates associated with these process solutions routinely exceed 100 mrem/hr and can pose a potentially serious hazard to workers at the INEEL if appropriate protective measures such as time, distance, and shielding are not applied. As a result the INEEL is requesting the use of alternate handling and sampling techniques as proposed in this permit application."

Specific waste characterization information, including radioactive waste analyses, is maintained in the operating record.

C-1. Chemical and Physical Analyses: IDAPA 58.01.05.008 and .012 [40 CFR §§ 264.13(a) and 270.14(b)(2)]

5. Page C-5, line 3 through 4, appears to indicate that there are test methods equivalent to the methods set forth in the Subpart C of 40 CFR 261 approved by the Director of the Idaho DEQ. Clarify if these methods have actually been approved by the Director and revise the Part B Permit Application to include a brief description of each of the equivalent methods.

RESPONSE:

The analyses noted in this Part B Permit Application do not require variances/deviations from the test methods identified in Tables C-1 and C-2. The application language referenced on page C-5 of the Part B Permit Application is included to assure the DEQ that when such variances are necessary, appropriate equivalent method approval by the Director of the DEQ will be sought.

6. Page C-5, line 7 through 9, states that "With few exceptions, units that comprise the ILWMS manage land disposal restricted waste liquids that exhibit the characteristics of corrosivity and toxicity, and contain one or more listed constituents." In the revised Part B Permit Application, clarify the exceptions referred to in the sentence.

RESPONSE:

Information from lines 18 through 20 on page C-5 of the Permit B Permit Application was incorporated into the referenced paragraph to provide clarification. The description on page C-5 now reads:

"Except for the CPP-641 Westside Waste Holdup Tanks (VES-WL-103, VES-WL-104, and VES-WL-105), units that comprise the ILWMS manage land disposal restricted waste liquids that exhibit the characteristics of corrosivity and toxicity, and contain one or more listed constituents. Transfer lines from the Westside Waste Holdup Tanks include sections of tile-encased lines. Because of compatibility concerns regarding waste acids and the grout used for the tile-encasement, these tanks are prohibited from managing wastes exhibiting the characteristic of corrosivity (EPA HWN D002)."

7. The Part B Permit Application must provide detailed physical and chemical characteristics, based on analytical data and/or acceptable process knowledge, of waste being stored and/or treated in each of the ILWMS tank systems and miscellaneous units. For example, the Engineering Design File (EDF) for VOC Emissions from ALD Inputs to the INTEC Deep Tanks (see Attachment 1 of the Part B Permit Application, Revision 1), page 2 of 6, 3rd and 4th paragraphs, provide sufficient information pertaining to chemical characteristics of the waste being stored and treated in the CPP-601 Deep Tanks. The revised Part B Permit Application must provide equivalent quality of information/description for each unit associated with the ILWMS.

RESPONSE:

Attachments 3a through 3k to this NOD response contain analytical results for representative samples from tanks included in the ILWMS. Due to the level of redundancy designed into the system, several tanks and miscellaneous treatment units may manage the same waste. The following matrix is provided to show which analytical results are representative of wastes in the various segments of the ILWMS.

Tank(s)/Treatment Unit(s)	Description	Typical Analytical Results
VES-NCC-119	Fluoride Hot Sump Tank	See Attachment 3a
VES-NCC-122	Non-Fluoride Hot Sump Tank	See Attachment 3b
VES-NCD-123/VES-NCD-129	Decon Holdup and Collection Tanks	See Attachment 3c
VES-WL-132	CPP-604 Evaporator Feed Sediment Tank – fed through VES-WL-133	See Attachment 3d
VES-WL-133	CPP-604 Evaporator Feed Collection Tank	See Attachment 3d
VES-WL-102	CPP-604 Surge Tank for VES-WL-133 – fed through VES-WL-133	See Attachments 3d and 3e
VES-WL-109	CPP-604 Evaporator Head Tank – fed from VES-WL-133	See Attachment 3d
EVAP-WL-129 / EVAP-WL-161	Process Equipment Waste Evaporators – fed from VES-WL-133	See Attachment 3d
VES-WL-134	CPP-604 Process Condensate Surge Tank – may be used for series operation of the PEW evaporators or for storage capacity of concentrated acidic LET&D bottoms	See Attachment 3j or Attachment 3k
VES-WL-131	CPP-604 Process Condensate Surge Tank – feeds to the Process Condensate Collection Tanks	See Attachment 3j
VES-WL-108	CPP-604 Process Offgas Knock Out Pot – collected liquid would drain to either VES-WL-133 or VES-WL-131	See Attachment 3d or Attachment 3j

Tank(s)/Treatment Unit(s)	Description	Typical Analytical Results
VES-WL-101 VES-WL-111	CPP-604 Bottoms Collection Tanks – sample drawn from sample station WL-613 in 1983/Bottoms historically transferred to Tank Farm Tanks VES-WM-186	See Attachment 3f
VES-WL-103, VES-WL-104, and VES-WL-105	CPP-641 Westside Waste Holdup Tanks - these tanks have been emptied to the maximum extent allowed by the transfer pumps, without causing damage to the pump bearings, and no transfers of waste to this system are taking place	See Attachment 3g
VES-WM-100, VES-WM-101, and VES-WM-102	CPP-604 Tank Farm Tanks	See Attachment 3h
VES-WG-100, VES-WG-101, VES-WH-100, and VES-WH-101	CPP-601 Deep Tanks	See Attachment 3i
VES-WL-135, VES-WL-136, VES-WL-137, VES-WL-138, VES-WL-139, VES-WL-142, VES-WL-144, and VES-WL-150	Process Waste Liquid Tanks – may collect PEW evaporator condensate	See Attachment 3j
VES-WL-106, VES-WL-107, and VES-WL-163	CPP-604 Process Condensate Collection Tanks	See Attachment 3j
VES-WLK-197	CPP-1618 Acid Fractionator Waste Feed Head Tank – fed from CPP-604 Process Condensate Collection Tanks	See Attachment 3j
FRAC-WLL-170 and FRAC-WLK-171	CPP-1618 Acid Fractionators – fed from CPP-604 Process Condensate Collection Tanks	See Attachment 3j
VES-WLL-195	CPP-1618 Acid Fractionator Bottoms Tank	See Attachment 3k

Tank(s)/Treatment Unit(s)	Description	Typical Analytical Results
VES-NCR-171	CPP-659 Annex LET&D Nitric Acid Recycle Tank – fed from VES-WLL-195	See Attachment 3k
VES-NCR-173	CPP-659 Annex LET&D Nitric Acid Recycle Head Tank – fed from VES-NCR-171	See Attachment 3k

8. The response to NOD #29 states that "Sampling and analysis has demonstrated that when these small quantities of ignitable waste are aggregated with other waste in the CPP-601 Deep Tanks to facilitate treatment, the characteristic of ignitability is lost." In the absence of a summary of past studies, which have been conducted on wastes in the Deep Tanks, DEQ is unable to reach the same conclusion. The revised Section C must clearly justify the absence of the characteristic of ignitability in the deep tank.

RESPONSE:

As indicated in Table C-3 of the Part B Permit Application, process samples are taken from the CPP-601 Deep Tanks (VES-WG-100, VES-WG-101, VES-WH-100, and VES-WH-101) prior to each transfer to the PEWE system. These process samples are analyzed for flashpoint to ensure they do not exhibit the characteristic of ignitability. Attachment 4 to this NOD response contains templates for the parameters analyzed for process samples from the WG and WH tanks. This attachment also includes examples of results from recent process sampling activities from these tanks demonstrating that these mixtures are not ignitable.

9. Clarify whether or not the contents in the WWH tanks are corrosive.

RESPONSE:

Before the tanks were emptied to their current levels demineralized water was added until the pH of the waste was greater than or equal to 2.0 and less than or equal to 12.5 to ensure transferred waste was compatible with the grout used for tile-encased transfer lines. Attachment 5 to this NOD response shows analytical results of the material contained in the WWH tanks. These results show that the wastes in all 3 tanks exhibit a pH $\geq$ 2.0 and $\leq$ 12.5.

10. Results of the Balance of Plant sampling conducted in FY 1999 and 2000 (Book 1 of 4 of the Part B Permit Application) identify "unknown" volatile and semi-volatile organics (VOCs and SVOCs). The revised Section C must comprehensively discuss these unknown VOCs and SVOCs, include justifications as to why they were not/could not be identified, and discuss the fate of these unknown components throughout the ILMWS.

RESPONSE:

EPA guidance (*Contract Laboratory Program National Functional Guidelines for Organic Data Review,* EPA/R-94/012, 1994; *Guidance on Collection of Emissions Data to Support Site-Specific Risk Assessments at Hazardous Waste Combustion Facilities, EPA530-D-98-002*, August 1998; and *USEPA Contract Laboratory Program Statement of Work for Organic Analysis, Multimedia, Multi-Concentration,* OLM04.2, May 1999) specifies the identification and quantification of tentatively identified compounds (TICs) that are observed in the VOC and SVOC chromatograms. Results of the Balance of Plant sampling conducted in fiscal years (FY) 1999 and 2000 were reviewed by Analytical Laboratory personnel to identify TICs based on this guidance. Identification and quantification of these TICs was done according to the EPA Contract Laboratory Program guidelines. These guidelines indicate that chromatogram peaks with the greatest apparent concentrations should be tentatively identified and quantified. Additionally, all peaks with favorably matched retention times and apparent primary ion concentration down to 10% relative intensity (based on area) with respect to the primary ion of the nearest internal standard, should be identified and reported in their estimated concentration. Relative major ion intensities should agree within +/- 20%. Compound identifications were made using National Institute of Standards and Technology /EPA/National Institute of Health (May 1992) equivalent mass spectral library data. These are tentative identifications because there were no reference standards analyzed at the same chromatogram retention time as the tentatively identified compounds.

The reportable concentrations for these TICs were estimated by comparing the compound total area count (or peak height) to the total area count (or peak height) of the nearest internal standard free from interferences on the total or reconstructed ion chromatogram, and assuming a relative response factor (RRF) of 1.0. Results were reported on a separately identified list and flagged as estimated. The RRF is compound-specific, and cannot be determined in the TIC evaluation. The revised report specifies the corresponding internal standards used in the calculation of TIC concentrations.

For this effort, the "match quality" (Q), an agreement between the unknown peak and potentially matching library compounds, was required to be at least 85% for the unknown peak to be identified as a specific compound. This degree of matching may result in false-positive identification of TICs in the sample. Therefore, it may be necessary to re-examine results that, in the judgment of the project technical lead and quality assurance office, seem incredible. This list, however, will help identify any constituents that should be added to the VOC and SVOC target analyte list for future sampling. Any compounds that failed to meet a minimum match quality of 85% continue to be listed as "unidentified."

Based on the review of Balance of Plant analytical results for sampling conducted in FY 1999 and 2000, all reported compounds, with two exceptions, continue to be "unknown"(657 reported), "unknown hydrocarbons"(30 reported) or substituted benzenes (17 reported) in the referenced data packages since the relative major ion intensities exceeded the +/-20% criteria. The exceptions are as follows:

- Benzoic acid in VES-NCD-123 at an estimated level of 21 ug/L

- Chloroform in VES-WL-106 at an estimated level of 12 ug/L.

Both of these TICs are short-chain hydrocarbons that may be present in extremely low concentrations. EDF-2432 was prepared and included as Attachment 1 to the first NOD response, which was submitted to the DEQ in December 2002. This EDF reviewed the inventory of organics sent from CPP-602, CPP-630, and CPP-684 to the Deep Tanks. The EDF conservatively assumed that all "unidentified" volatile organic compounds were isopropanol, which was then readily converted to acetone; considered a worst-case volatile organic. The EDF concluded that although the organic concentration in the Deep Tanks may exceed 10 ppmw, making 40 CFR 264 Subpart AA applicable to this system, associated emissions of volatile organic compounds (VOC) are much less than 3 lb/hr and 3.1 tons/yr. The TICs and estimated concentrations identified from this review of FY 1999 and 2000 Balance of Plant sampling data do not alter this conclusion.

Provided as Attachment 6 to this NOD response are the analytical results identifying the TICs described above.

C-lc. Waste in Miscellaneous Treatment Units: IDAPA 58.01.05.008 [40 CFR § 264.601(a)(1)]

11. Response to NOD #35 does not fully address DEQ's concern. The revised Section C must provide detailed physical and chemical characteristics, based on analytical data and/or acceptable process knowledge, of the evaporator and fractionator bottoms and overheads.

RESPONSE:

See the response to item No. 7 of this NOD.

C-2. Waste Analysis Plan: IDAPA 58.01.05.008 and .012 [40 CFR §§ 264.13(b) and (c), and 270.14(b)(3)]

12. One of the objectives of the WAP (6th bullet) is to provide additional requirements for the characterization and acceptance of ignitable and reactive wastes. It is DEQ's understanding that the ILWMS will not manage wastes that exhibit the characteristic of reactivity (EPA HWN D003). Clarify this discrepancy in the revised Section C.

RESPONSE:

The DEQ is correct. The INEEL will not manage wastes exhibiting the characteristic of reactivity in the ILWMS. The 6th bullet under Section C-2 of the Part B Permit Application has been revised to read:

- "Provide additional requirements for the characterization and acceptance of ignitable wastes."

13. One of the examples of process knowledge described in Section C uses analytical reports from non-SW-846 chemical analyses, outdated chemical analyses, or information from similar processes. Justify the validity of these analyses being used as process knowledge in lieu of acceptable knowledge based on valid analytical techniques (EPA Guidance Manual for Waste Analysis at Facilities that Generate, Treat, Store and Dispose of Hazardous Wastes).

RESPONSE:

Non-SW-846 chemical analyses are process sampling results that do not necessarily follow SW-846 sample collection or QA/QC protocol prescriptively. The results, however, supply information related to the characteristics of the waste that may be used as process knowledge during RCRA characterization. If process sample results are inconsistent with the waste characterization information provided by the generator or indicate that the waste generating process may have changed, then the waste is recharacterized.

Outdated chemical analyses are not used to support process knowledge for RCRA characterization of wastes managed by the ILWMS. The reference to outdated chemical analyses has been removed from the Part B Permit Application.

The sixth bullet of Section C-2a of the Part B Permit Application was revised to read:

- "Analytical reports from non-SW-846 chemical analyses or information from similar processes."

C-2a(1). Waste Acceptance Criteria

14. State the concentration limits for both total suspended solids and total dissolved solids acceptable to the ILWMS.

RESPONSE:

There are no concentration limits for TSS or TDS. All physical and chemical operational constraints and tolerance limits are identified in Section D-8b(5) of the Part B Permit Application.

C-2c(1). Standard Sampling Methods

15. Samples from the ILWMS are typically collected through double hypodermic needle (double-needle) samplers, sample nozzles, or spigots. The double-needle samplers may lose VOCs and SVOCs to either headspace of the sample vial or to the carrier gases used to move/collect the sample. DOE must demonstrate that the use of the double-needle sampling system does not impact the accuracy of the VOC and SVOC analytical data.

RESPONSE:

Appendix C-2 has been added to the Part B Permit Application. This appendix contains a report from Science Applications International Corporation entitled; "Final Report for Organics Partitioning Resulting from Operation of an INTEC Double-Needle Sampler, Revision 1," dated September 24, 2002. This report shows that volatile organics taken from a double-needle sampler closely correlate to samples taken from a spigot at a PEWE mock-up facility. In fact, in several instances, the level of volatile organics measured from samples taken through the double-needle sampler was slightly greater, or more conservative, than that for samples taken from the spigot.

The following description was added to the end of the first paragraph of Section C-2c(1) of the Part B Permit Application:

"Appendix C-2 contains a report from Science Applications International Corporation entitled, "Final Report for Organics Partitioning Resulting from Operation of an INTEC

Double-Needle Sampler, Revision 1," dated September 24, 2002. This study compares organic concentrations obtained from double-needle and spigot sampling techniques to determine whether potential stripping of organics occurs. The results of these tests indicate that INTEC sample collection and handling procedures do not significantly affect the concentration of volatile or semi-volatile organic constituents in the waste stream."

C-2c(3). Process Sampling

16. Exhibit C-1 of the Volume 14 Permit Application, Revision 0, shows two additional process sampling locations, the feed collection tanks and the bottom collection tanks, which are not identified in Table C-3 of the Permit Application, Revision 1. Clarify this discrepancy in the revised Section C.

RESPONSE:

Table C-3 in the Part B Permit Application identifies ILWMS typical process sampling locations and the parameters tested. Exhibit D-1, PEWE System Flow Diagram and Inputs, of the permit application has been revised to indicate that the Bottoms Collection Tanks and the PEWE Feed Tanks are not routinely sampled.

Bottoms collected in VES-WL-101 and VES-WL-111 are transferred to either the Tank Farm Facility or the Evaporator Tank System where sampling can occur. Since these tank systems were designed and constructed to manage the types of waste to be processed, there is no need to collect process samples prior to waste transfers.

VES-WL-102 and VES-WL-133 contain samplers; however, the sample lines are plugged and not serviceable. Process samples are taken upstream of the PEWE Feed Tanks to ensure that process tolerance limits are met. VES-WL-132 is not equipped with a sampler.

17. Justify why the analytical parameters seem to vary with the sampling location. Each waste stream must meet the same acceptance profile before it can be received to the evaporators.

RESPONSE:

Table C-3 identifies typical ILWMS process sampling locations and parameters. Process sampling differs from RCRA characterization sampling in that process samples are collected solely to ensure optimum operation of the miscellaneous treatment units. RCRA characterization and waste verification/acceptance are completed prior to receiving waste streams into the ILWMS. Process samples are taken after acceptance of the waste into the system to ensure performance criteria associated with the miscellaneous treatment units are satisfied for each consecutive step in the treatment train. Process samples are not taken for RCRA characterization of wastes. However, if process sampling results are inconsistent with the waste characterization information provided by the generator or indicate that the waste generating process may have changed, then the waste is recharacterized.

The following statement was added to the last paragraph of Section C-2c(3) of the Part B Permit Application.

"If process sampling results are inconsistent with the waste characterization information provided by the generator or indicate that the waste generating process may have changed, then the waste is recharacterized."

C-2f. Additional Requirements for Ignitable, Reactive, or Incompatible Wastes: IDAPA 58.01.05.008 [40 CFR §§ 264.13(b)(6) and 264.171

18. It appears that a hexone/nitric acid reaction can occur if an adequate concentration of hexone is present and necessary temperature requirements are met. The flashpoint of hexone in water at the elevation of the INEEL is 133°F (56°C) at a concentration of 2000 mg/L. Since the operating temperature of the PEW evaporators and LET&D fractionators are high enough to sustain a hexone/nitric acid reaction, under the operating condition, the concentration of total organic carbon (TOC) allowed in the feed of the ILWMS is limited to 1100 mg/L (assuming all TOC is hexone). These descriptions are included in the NOD response (response #51) but not in the Part B Permit Application, Revision 1. Because the tolerance limit set for the TOC appears to be a requirement for reactive waste, include the response to NOD #51 to the revised Section C.

RESPONSE:

The following description was added to the end of Section C-2f of the Part B Permit Application:

"The safety analysis documentation for the ILWMS indicates that, under the proper conditions, two potentially explosive reactions could occur. These reactions are tributyl phosphate (TBP) with nitric acid and hexone with nitric acid. Due to the temperature requirements necessary for these reactions, the only units described in this Part B permit application that could potentially sustain these reactions are the PEW evaporators and the LET&D fractionators.

"Conditions necessary for a TBP/nitric acid reaction include appropriate TBP concentration and elevated temperature (studies have shown that this reaction does not become extremely exothermic until the solution reaches 186° C).

"The quantity of TBP in the ILWMS is extremely small. Since the end of fuel reprocessing activities at the INTEC in the early 1990's, no TBP has been added to the system. In addition, all liquids in the INTEC TFF have already been evaporated at least once, further reducing the volume of TBP.

"Both the PEWE and LET&D facilities operate at much lower temperatures than are necessary to sustain a TBP/nitric acid reaction. Standard operating temperatures for these facilities are 108° C for the PEW evaporators and 118° C for the LET&D fractionators. Deviations from these operating temperatures result in waste feed cutoffs and/or shutdown of the system well before a temperature of 186° C can be reached.

"In order for a hexone/nitric acid reaction to occur, similar conditions must exist. A reaction can only be sustained if an adequate concentration of hexone is present and necessary temperature requirements are met. The flashpoint of hexone in water at the elevation of the INEEL is 133° F (56° C) at a concentration of 2000 mg/L.

"Like TBP, hexone is present in INTEC liquid wastes in only minimal concentrations. However, since the operating temperatures of the PEW evaporators and LET&D fractionators are high enough to sustain a hexone/nitric acid reaction, under the

appropriate conditions, the concentration of TOC allowed in the feed to the ILWMS is limited to 1100 mg/L. To ensure conservatism, all TOC is assumed to be hexone. This tolerance limit is identified in Section D-8b(5) of this permit application for both the PEWE and LET&D facilities.

"Furthermore, the LET&D facility is operated as an open system. The LET&D fractionators are maintained at a pressure of –20 in. water column. Both the TBP/nitric acid and the hexone/nitric acid scenarios require a closed system to sustain a reaction. The conditions in the LET&D facility preclude either reaction from occurring. If a vacuum cannot be maintained, the treatment process is automatically shut down.

"Therefore, the risk of explosive TBP/nitric acid reactions is eliminated due to low reactant concentrations, inadequate temperature, and open vessel conditions in the LET&D fractionators. Similarly, hexone/nitric acid reactions cannot occur due to low reactant concentrations, which are further regulated by administrative controls, and open vessel conditions on the LET&D fractionators."

19. The last sentence of the response to NOD #53 should be included in the revised waste analysis plan.

RESPONSE:

The following description was added to the first paragraph of Section C-2f of the Part B Permit Application:

"As identified in Table C-3 of Section C-2c(3), process samples are taken from the CPP-601 Deep Tanks prior to each transfer to the PEWE system and tested for flashpoint to ensure the feed stream is not ignitable."

C-4. Subpart AA, Subpart BB, and Subpart CC Applicability: IDAPA 58.01.05.008 [40 CFR §§ 264.1030, 264.1050, and 264.1080]

20. DEQ's comments appear to have not been adequately addressed and included in the Permit Application, Revision 1. See the General Comment section, second bullet.

RESPONSE:

See the response to item No. 2 of this NOD.

D. PROCESS INFORMATION

21. The response to NOD #67 indicates that PEWE off-gas samples, based on a study conducted on a bench-scale model of the PEWE, taken downstream of the PEWE condensers did not contain free liquids, thus the off-gas is non-condensable. The mist eliminator and superheater downstream of the PEWE condenser appear to be redundant equipment based on the bench-scale study. The revised Part B Permit Application must describe the need and operational parameters for this equipment.

RESPONSE:

The mist eliminator and superheater, components of the Vessel Offgas (VOG) System, are included to protect and extend the life expectancy of high-efficiency particulate air (HEPA) filters included in the offgas system. Under normal operations these components might be considered redundant; however, in the unlikely event of system upset they ensure adequate protection of human health and the environment by preventing degradation of the HEPA filters.

The first paragraph of Section D-2d of the Part B Permit Application under the heading, "PEWE Pressure Controls" was revised to read:

> "Waste treatment and storage vessels at INTEC are connected to a gaseous waste treatment system called the VOG system. All ILWMS storage and treatment systems discharge gases such as instrument air purges (used in level, density, and pressure instrumentation), air spargers (agitators), and gases displaced from a vessel when it fills with liquid.
>
> "Gases from the PEWE and other INTEC processes, such as the Tank Farm and CPP-659 vessels, vent to the CPP-604 VOG system. The CPP-604 VOG system consists of a mist eliminator, superheater, and HEPA filter banks. The mist eliminator and superheater are included to protect and extend the life expectancy of the HEPA filters.
>
> "Several facility process and vessel offgas systems, including the CPP-604 VOG system, combine in the Process APS located in CPP-649. The Process APS is a back-up system that treats the combined process and vessel offgas streams from CPP-601, CPP-604, Tank Farm, and the NWCF. The Process APS treatment consists of a mist eliminator, superheater, and HEPA filters. Next, the process and vessel offgases are routed to the INTEC Main Stack (CPP-708) where they mix with building ventilation air and are exhausted to the atmosphere. The vessel and process offgas systems are maintained under a vacuum to control contamination. The system equipment and piping are fabricated from acid resistant stainless steel for corrosion resistance. Additionally, the Process Condensate Collection Tanks can be vented to the process condensate collection cells, which vent to the CPP-604 building ventilation system. The VOG and APS systems are described further in Section D-8b of this application."

22. To qualify for the emergency structure exemption as set forth in IDAPA 58.01.05.008 [40 CFR § 264.1(g)(8)(i)], the revised Section C must clarify the source(s) of the wastes collected in the PWL sumps.

RESPONSE:

Sump SU-WL-140 is located in the South Cell of the Rare Gas Plant (RGP). The RGP is no longer active. Therefore, there are no sources of waste that would be collected in this sump.

Sump SU-WL-143 is located in the RGP Pump Pit. Since the RGP is no longer active, there are no sources of waste that would be collected in this sump.

Sump SU-WL-148 is located at the INTEC main stack. In the event of equipment failure, condensate from the main stack could collect in this sump.

Sumps SU-WL-145 and SU-WL-146 are part of the secondary containment and leak detection system in the PEWE Condensate Collection Cell. As such, these sumps do not require the emergency structure exemption set forth in IDAPA 58.01.05.008 [40 CFR § 264.1(g)(8)(i)].

Sump SU-WL-147 is part of the secondary containment and leak detection system in the PEWE EVAP-WL-161 Cell. As such, this sump does not require the emergency structure exemption set forth in IDAPA 58.01.05.008 [40 CFR § 264.1(g)(8)(i)].

The following description was added to Section C-1b of the Part B Permit Application under the heading, "Process Waste Liquid (PWL) System (VES-WL-135, VES-WL-136, VES-WL-137, VES-WL-138, VES-WL-139, VES-WL-142, VES-WL-144, and VES-WL-150)":

> "Sumps SU-WL-140, -143, -145, -146, -147 and -148 do not contain tanks. These sumps are not used routinely. The exclusive purpose of these sumps is to contain liquids during immediate responses to discharges of hazardous wastes.
>
> "Sump SU-WL-140 is located in the South Cell of the Rare Gas Plant (RGP). The RGP is no longer active. Therefore, there are no sources of waste that would be collected in this sump.
>
> "Sump SU-WL-143 is located in the RGP Pump Pit. Since the RGP is no longer active, there are no sources of waste that would be collected in this sump.
>
> "Sump SU-WL-148 is located at the INTEC main stack. In the event of equipment failure, condensate from the main stack could collect in this sump.
>
> "Sumps SU-WL-145 and SU-WL-146 are part of the secondary containment and leak detection system in the PEWE Condensate Collection Cell.
>
> "Sump SU-WL-147 is part of the secondary containment and leak detection system in the PEWE EVAP-WL-161 Cell."

The second and third paragraphs of Section D-1 of the Part B Permit Application under the heading, "VES-WL-135, VES-WL-136, VES-WL-137, VES-WL-138, VES-WL-139, VES-WL-142, VES-WL-144, and VES-WL-150, Process Waste Liquid (PWL) Tanks and Sumps" were revised to read:

> "The PWL tanks and sumps are located in CPP-604, CPP-649, and associated valve boxes. The purpose of the system is to collect offgas condensate and liquid from floor drains and transfer the waste to the PEWE Evaporator Feed Collection Tank, VES-WL-133. The system is comprised of tanks VES-WL-135, -136, -137, -138, -139, -142, -144, -150, and various cell sumps. VES-WL-150 collects liquids from the floor drains and the other tanks collect offgas condensate. A sump or vault secondarily contains each of the tanks.
>
> "Sumps SU-WL-140, -143, -145, -146, -147 and -148 do not contain PWL tanks. Sumps SU-WL-140 and SU-WL-143 are located in the Rare Gas Plant in CPP-604. Since the Rare Gas Plant is no longer active there are no sources of waste that would be collected in either sump. Sump SU-WL-148 is located at the INTEC main stack. In the event of equipment failure, condensate from the main stack could collect in this sump. These sumps are emergency equipment and do not routinely collect waste; therefore, the sumps

are exempt from requiring secondary containment. Sumps SU-WL-145, SU-WL-146, and SU-WL-147 are part of the secondary containment and leak detection system for the PEWE Condensate Collection Cell and PEWE EVAP-WL-161 Cell. As such, these sumps do not require the emergency structure exemption set forth in IDAPA 58.01.05.008 [40 CFR § 264.1(g)(8)(i)]."

23. Include the response to NOD #72 in the revised Section C to justify the transfer of PEWE bottoms to the ETS.

RESPONSE:

The following description was added at the end of the second paragraph in Section D-1 of the Part B Permit Application under the heading, "PEWE System Operation":

"All of these tanks were designed and constructed to contain the types of solutions stored. The P.E. certifications for these units attest that the tank systems are adequately designed and are compatible with the waste(s) to be stored or treated in accordance with IDAPA 58.01.05.008 [40 CFR § 264.192(a)].

"As described above, there may be instances where complete concentration of the waste feed does not occur. When this happens, the remaining feed may be blended with other wastes and reintroduced to the ILWMS. Depending on the characteristics of the new feed solution (e.g., high chlorides, fluorides, or radionuclide concentration), it may be appropriate to route the mixture back to the ETS for processing, rather than the PEWE, to ensure optimum treatment and protection of equipment.

"With the addition of the C-40 valve box, the PEWE bottoms (from both VES-WL-101 and VES-WL-111) can be transferred to the ETS, TFF, and the CPP-604 TFT. From the CPP-604 TFT, waste can be transferred to the TFF, the ETS, or the PEWE. The transfer lines are encased in stainless steel and equipped with leak detection. Drawings showing transfer routes are included in the Section D Plant Drawing package for the Part B Permit Application, Appendix D-1."

24. Include the response to NOD #74 in the revised Section C to justify the transfer of PEWE process condensate to the LET&D facility or back to the evaporator feed tank.

RESPONSE:

The following description was added after the second paragraph of Section D-1 of the Part B Permit Application under the heading, "PEWE System Operation":

"Occasionally, PEWE process condensate does not meet the feed limits or operational constraints (e.g., fluorides, TOC, radionuclide concentration) established for the LET&D facility, as identified in Section D-8b(5) of the Part B Permit Application. In these instances, the condensate is routed back to the evaporator feed tank and blended with other solutions for further processing."

D-2. Tank Systems

D-2d. Description of Feed Systems, Safety Cutoffs, Bypass Systems, and Pressure Control: IDAPA 58.01.05.012 [40 CFR § 270.16(c)]

PEWE System

25. Include the response to NOD #86 in the revised Section D.

RESPONSE:

The following description was added after the first paragraph of Section D-2d of the Part B Permit Application under the heading, "PEWE Safety Cutoffs":

"The DCS monitors and controls processes in the ILWMS. These processes include the LET&D, Service Waste, PEWE, Process Offgas (POG), Atmospheric Protection System (APS), PWL, VOG, and Main Stack Monitor processes or systems. The DCS is a microprocessor-based control system that uses a combination of free-standing operator consoles networked to electronic I/O interfaces to field devices.

"To ensure a high degree of integrity, redundancy is used where possible. These include redundant controllers, power supplies, communications modules, consoles, and data highway cabling. This redundancy, along with utilization of equipment only from a vendor with documented previous experience of providing successful complex process control systems, and adherence to the vendor's recommended preventive maintenance practices provide the necessary assurance of reliability for meeting the requirements of EPA regulations, Technical Specifications/Standards, and plant mission."

26. Response to NOD #93 does not address DEQ's stated concern. Revise Section D to include a detailed justification for the direct transfer of waste through the evaporators to the PEWE Bottom tanks without operating the evaporators.

RESPONSE:

Section D-2d of the Part B Permit Application under the heading, "PEWE Bypass Systems" was revised to read:

"Waste can be transferred through the evaporators to VES-WL-101 or VES-WL-111 without operating the evaporators. Such transfers may occur when:

- The evaporators are not operable due to scheduled maintenance activities or are in need of repairs
- The system requires testing following repairs or maintenance (this minimizes waste by not introducing new materials to the system)
- The PEWE Feed Tanks can be emptied to allow additional storage capacity during periods of system maintenance and/or testing."

27. Include the response to NOD #94 to the revised Section D. At a minimum, reference Section D-8b, which describes the CPP-604 building ventilation system.

RESPONSE:

The first paragraph of Section D-2d of the Part B Permit Application under the heading, "PEWE Pressure Controls" was revised to read:

"Waste treatment and storage vessels at INTEC are connected to a gaseous waste treatment system called the VOG system. All ILWMS storage and treatment systems discharge gases such as instrument air purges (used in level, density, and pressure instrumentation), air spargers (agitators), and gases displaced from a vessel when it fills with liquid.

"Gases from the PEWE and other INTEC processes, such as the Tank Farm and CPP-659 vessels, vent to the CPP-604 VOG system. The CPP-604 VOG system consists of a mist eliminator, superheater, and HEPA filter banks. The mist eliminator and superheater are included to protect and extend the life expectancy of the HEPA filters.

"Several facility process and vessel offgas systems, including the CPP-604 VOG system, combine in the Process APS located in CPP-649. The Process APS is a back-up system that treats the combined process and vessel offgas streams from CPP-601, CPP-604, Tank Farm, and the NWCF. The Process APS treatment consists of a mist eliminator, superheater, and HEPA filters. Next, the process and vessel offgases are routed to the INTEC Main Stack (CPP-708) where they mix with building ventilation air and are exhausted to the atmosphere. The vessel and process offgas systems are maintained under a vacuum to control contamination. The system equipment and piping are fabricated from acid resistant stainless steel for corrosion resistance. Additionally, the Process Condensate Collection Tanks can be vented to the process condensate collection cells, which vent to the CPP-604 building ventilation system. The VOG and APS systems are described further in Section D-8b of this application."

D-2f(1)(b). Requirements for Secondary Containment and Leak Detection: IDAPA 58.01.05.008 and .012 [40 CFR §§ 264.193 and 270.16(g)]

28. Include the response to NOD #112 to the revised Section D providing details to demonstrate how spilled or leaked waste and accumulated precipitation will be removed from all sumps within the timeframe in accordance with IDAPA 58.01.05.008 [40 CFR § 264.193(b)(3)].

RESPONSE:

The following description was added after the fourth paragraph of Section D-2f(1)(b) of the Part B Permit Application:

"Upon detection of spilled or leaked materials, the following actions are taken:

- Within 24 hours, remove as much of the waste as is necessary to prevent further releases of hazardous waste to the environment and to allow inspection and repair of the treatment system, in accordance with IDAPA 58.01.05.008 [40 CFR § 264.601]

- Prevent migration of and remove visible contamination from soil or surface water, in accordance with IDAPA 58.01.05.008 [40 CFR § 264.601]

- If the collected material is an HWMA/RCRA-regulated material, manage it in accordance with all applicable requirements of IDAPA 58.01.05.005 through 58.01.05.008 [40 CFR Parts 261 through 264]."

29. Include the response to NOD #116 to the revised Section D.

RESPONSE:

The first paragraph of Section D-2f(1)(b) of the Part B Permit Application under the heading, "CPP-601 Deep Tanks Vaults" was revised to read:

> "The WG/WH tanks are located on the lowest level of CPP-601. Two tanks are located in each of the two reinforced concrete vaults. The cells each measure 38 ft 6 in. by 15 ft by 21 ft 6 in., with a stainless-steel-lined floor that extends 3-ft up the walls. Both vaults are provided with sumps and leak detection. Upon high level alarm, the sumps are jetted back to either VES-WG-100/-101 or VES-WH-100/-101 tanks."

30. The revised Part B Permit Application must provide measures for compliance with the applicable secondary containment and leak detection requirements for sections of piping embedded in concrete. To address these requirements, DOE may provide a definitive schedule for completion of any necessary upgrades associated with these embedded lines.

RESPONSE:

The following concrete penetrations at the INTEC have been identified as requiring upgrades to provide compatible secondary containment per DEQ's guidance:

Penetration Number	**Location**	**Function**
3" PWM-1018Y	VES-WM-101/102 Vault	Jet transfer line from WM-101 to WM-100
3" PWM-10024Y	VES-WM-101/102 Vault	Jet transfer line from WM-100 to WM-102
3" PWM-20015Y	VES-WM-101/102 Vault	Overfill line between WM-100/WM-101
1½" PWL-2091C[a]	Wall between 161 Evaporator Cell and the Condensate Collection Cell	Transfer line from VES-WL-109 to the VES-WL-161
1½" PWL-2091C[a]	Wall between 161 Evaporator Cell and the Condensate Collection Cell	Transfer line from VES-WL-109 to the VES-WL-161
4" PWL-1133C	Wall between 161 Evaporator Cell and VES-WL-101 Vault	Evaporators discharge line to VES-WL-101 Tank

Penetration Number	Location	Function
2"PWL-2068C	Condensate Collection Cell to Operating Corridor CPP-604	Discharge line from the collection tanks to the LET&D Process
1" PSAR- 107694[b]	Wall between the Service Corridor and E Cell.	Drain line from VES-E-108 to PEW
1 ½ " PE-AR-151820 [b]	Wall between the Service Corridor and C Cell. Drawing # 094762/ 133610	Drain line from VES-C-103 to PEW
¾" TC-2091Y [b]	Floor from the PM Deck of CPP-601 to the VES-C-103 Drawing # 133610	Drain line from the HOT Sink on the PM Deck to the collection tank VES-C103

a These penetrations do not require core drilling to install a secondary containment sleeve. Adequate area exists around the transfer line to properly sleeve the penetration.

b These penetrations will be rerouted to compliant lines as part of a Voluntary Consent Order Action Plan. The work plan is complete awaiting approval of an updated Safety Analysis Report.

The second and third paragraphs and Table D-5 of Section D-2f(1)(b) under the heading, "VES-WM-101/VES-WM-102 Vault" were deleted and replaced with the following:

"Concrete-embedded transfer lines have been identified at the ILWMS. In order to ensure compliance with the requirements of 40 CFR § 264.193(f), these lines will be upgraded or rerouted in accordance with the following schedule:

- Conceptual design complete by 9/30/04
- Title design complete by 9/30/05
- Work package development complete by 3/31/06
- Identified lines upgraded/rerouted and Professional Engineer certifications submitted to the DEQ on or before 9/30/06."

F. PROCEDURES TO PREVENT HAZARDS

F-2a. General Inspection Requirements: IDAPA 58.01.05.008 and .012 [40 CFR §§ 264.15(a) and (b), 264.33, 264.195, and 270.14(b)(5)]

31. Include the response to NOD #132 to the revised Part B Permit Application, or replace Footnote (1) in Appendix F1-24 with a brief summary of the response to NOD #132.

RESPONSE:

The following description was added to Section D-2f(1)(b) of the Part B Permit Application under the heading, "EVAP-WL-161 Cell":

"There are known defects (cracks) in the CPP-604 EVAP-WL-161 Evaporator cell concrete walls. INTEC structural engineering personnel have evaluated the condition of the WL-161 Evaporator cell and have determined the cell to be structurally sound. RCRA regulations [40 CFR § 264.15(c)] require repair of structures to ensure the problem does not lead to an environmental or human health hazard. The existing condition of the WL-161 cell does not pose a hazard to the environment or to human health. The portion of the cell that provides secondary containment and leak detection is the lower three-foot stainless steel cell liner, which has no defects. The defects in the cell are only in portions of the concrete walls located above the cell liner. Any leaks from the process vessels or ancillary piping will be completely contained within the stainless steel liner and will not subject the concrete wall to any sustained exposure to hazardous waste. The cell is maintained under negative pressure. Any offgas from a leak or spill would be collected in the CPP-604 VOG system. Inspections of the cell during periods of maintenance or repair are made to ensure that deterioration of the concrete does not increase."

F-3a(1). Equipment Requirements: IDAPA 58.01.05.008 and .012 [40 CFR §§ 264.32 and 270.14(b)]

32. Include the response to NOD #133 to the revised Section F.

RESPONSE:

Appendices F-2 and F-5 in the Part B Permit Application identify the inspection schedules for the PEW evaporators and the LET&D fractionators, respectively.

Form INTEC-4005, "RCRA PEW Tank Overfill And Daily Leak Inspection," is included in Section F, Appendix 1 of the application. This form shows the types of inspections completed for the evaporators.

Form INTEC-4055, "RCRA LET&D Daily Facility Inspections," is included in Section F, Appendix 1 of the application. This form shows the types of inspections completed for the fractionators.

Section F-2a(1) of the Part B Permit Application was revised to read:

"The inspection schedules for the units that comprise the ILWMS, including the scope of the inspections performed and the types of problems noted, are summarized in Appendices F-2 through F-6."

F-4. Preventive Procedures, Structures, and Equipment

33. Include the response to NOD #136 to the revised Section F.

RESPONSE:

The first paragraph of Section F-4a of the Part B Permit Application under the heading, "Unloading Operations" was revised to read:

"Transfers of hazardous waste to and from CPP-604 are conducted through piping systems. Wastes generated at other INEEL or off-Site facilities may be introduced to the ILWMS via the CPP-1619 Truck Unloading Bay through tanker trucks or containers.

Unloading operations at this facility are controlled by standard operating procedures. During unloading operations, a portable HEPA air mover is required to filter particulate and radioactive emissions. An intake for the air mover is located near the unloading hose connections in the CPP-1619 unloading bay. A stainless-steel drip pan is used to collect possible leaks during unloading. Personnel will inspect for evidence of improper connections before beginning the transfer or acceptance of waste at CPP-1619. Waste staging areas will be inspected for leaks or spills when waste is being received."

F-4d. Equipment and Power Failure: IDAPA 58.01.05.012 [40 CFR § 270.14(b)(8)(iv)]

34. Include the response to NOD #139 to the revised Section F.

RESPONSE:

Section F-4d of the Part B Permit Application was revised to read:

"Some components of the ILWMS are supplied with redundant equipment. If equipment should fail on these systems, it would have minimal effect on the operating unit, since the redundant equipment would be started and the operation stabilized. The failed equipment would then be investigated to determine the cause of the failure, and repairs would be initiated. If a system that did not have redundant equipment were to fail, the operating unit would be secured.

"Upon total loss of electrical power, ILWMS equipment that manages hazardous and mixed wastes is designed to shut down in a manner that protects employees, equipment, human health, and the environment.

"Cranes and hoists are considered non-critical equipment and are not supplied with emergency standby power. This type of equipment is designed to fail in place. Movement will be suspended until power is restored.

"The DCS is designed with battery backup to maintain operability and to ensure safe shutdown.

CPP-604 PEWE System and TFT

"The Evaporator Feed Collection Tank (VES-WL-133), the Process Condensate Surge Tank (VES-WL-131) and the Process Condensate Collection Tanks (VES-WL-106, VES-WL-107, and VES-WL-163) are all equipped with two redundant transfer pumps.

"The PEW evaporators (EVAP-WL-129 and EVAP-WL-161) and associated heat exchangers are identical and may be operated independently or in parallel.

"PEW evaporator bottoms can be stored/treated in either VES-WL-101 or VES-WL-111.

CPP-601 Deep Tanks

"There are a total of four Deep Tanks (VES-WG-100, VES-WG-101, VES-WH-100, and VES-WH-101) that are essentially redundant systems. Each tank is equipped with sparge flow instruments, level instrumentation, one transfer jet, and one transfer pump.

"Sufficient redundancy exists such that a receiving tank is available for collection. Loss of a sparge flow or level instrument may require an operator to switch collection to another tank, but would not require total cessation of operations.

"If a system that does not have redundant equipment was to fail, the operating process would be shut down and not operated again until the failure was repaired.

CPP-1618 LET&D Facility

"The LET&D fractionators (FRAC-WLL-170 and FRAC-WLK-171) and associated heat exchangers are identical.

"The Acid Fractionator Bottoms Tank (VES-WLL-195) is equipped with two redundant transfer pumps."

35. Include the response to NOD #141 to the revised Section F.

RESPONSE:

See the response to item No. 34 of this NOD.

F-4f. Releases to the Atmosphere: IDAPA 58.01.05.012 [40 CFR § 270.14(b)(8)(iv)]

36. Since the CPP-641 Westside Waste Holdup tanks have been emptied to the maximum extent allowed, the current WWH tank vault configuration, although they are not connected to the VOG system, is acceptable. When/if the WWH tank system is upgraded, vault offgas system improvements must be taken into consideration.

RESPONSE:

The INEEL concurs. When/if the WWH tank system is upgraded, those upgrades would include replacement of the tile-encased transfer lines with piping that has secondary containment compatible with corrosives, lining of the vaults with stainless steel, an upgrade of the instrumentation, a sampler upgrade, and vessel/vault offgas system improvements.

I. CLOSURE AND POST-CLOSURE REQUIREMENTS

37. Include the response to NOD #151 and #152 to the revised Section I.

RESPONSE:

The following description was added after first paragraph of Section I 1.1.2(a) of the Part B Permit Application:

"The closure plan will be modified, in accordance with IDAPA 58.01.05.008 [40 CFR § 264.112(c)], to include the appropriate verification sampling techniques to be used to meet the closure performance standards prior to implementation of the closure plan."

The same description was added to Section I 1.1.3(a)(4) of the Part B Permit Application.

Other Changes

1. The second paragraph of Section C-1g of the Part B Permit Application was revised to state that PEWE bottoms may be stored in compliant storage units, other than the Tank Farm Facility (TFF), until an ultimate treatment and disposal alternative has been selected, permitted, and constructed. In an effort to empty and close TFF tanks, wastes may be transferred from the TFF to other RCRA-compliant storage units prior to permitting and construction of the ultimate treatment alternative for evaporator bottoms.

2. The bulleted item, immiscible organic liquids, was removed from the list of prohibited items in Section C-2a(1) of the Part B Permit Application. Small quantities of immiscible organics may be managed by the ILWMS as long as the system process tolerance limits are met.

3. Two parameters, specific gravity and total inorganic carbon, were removed from Table C-3 of the Part B Permit Application as parameters that are evaluated for process samples taken from the CPP-601 Deep Tanks. These parameters were inadvertently included in the table, which was added in response to the first NOD for this application. Although these parameters are evaluated for characterization samples, they are not analyzed for process samples.

4. Examples of inspection forms provided in Appendix F-1 of the Part B Permit Application were updated to reflect the most current revision of each form.

Attn: April

210

Material Safety Data Sheet

Material Name: ALKALINE RUST REMOVER T-4181 **ID: 238022**

*** Section 1 - Chemical Product and Company Identification ***

Product Trade Name ALKALINE RUST REMOVER T-4181

Manufacturer Information

Henkel Surface Technologies (248) 583-9300
Henkel Corporation
32100 Stephenson Highway (800) 424-9300
Madison Heights, MI 48071

*** Section 2 - Composition / Information on Ingredients ***

CAS #	Component	Percent
1310-73-2	Sodium hydroxide	> 60
102-71-6	Triethanolamine	10-20
527-07-1	Sodium gluconate	1-10
111-42-2	Diethanolamine	1-10

*** Section 3 - Hazards Identification ***

Emergency Overview:

DANGER!
CAUSES EYE AND SKIN BURNS. MAY CAUSE BLINDNESS.
CAUSES DIGESTIVE TRACT BURNS.
REPEATED OR PROLONGED EXPOSURE MAY CAUSE LIVER AND KIDNEY DAMAGE BASED ON ANIMAL DATA
EVEN DILUTE SOLUTIONS MAY CAUSE BURNS.

Potential Health Effects:

Inhalation and skin contact are expected to be the primary routes of occupational exposure to this material. Based on its composition, it is anticipated to be corrosive to the eyes, skin and respiratory tract. Inhalation of mist or vapor may cause coughing, sore throat, shortness of breath, lung injury or chemical pneumonia. Studies with animals repeatedly exposed to components of this material have produced liver and kidney damage. Medical conditions which may be aggravated by exposure to this material include lung, liver or kidney disease or limited respiratory capacity.

*** Section 4 - First Aid Measures ***

Eye Contact:

Skin Contact:

Immediately flush with plenty of water for at least 30 minutes while removing contaminated clothing and shoes. Get medical attention immediately. Wash clothing before reuse. Destroy contaminated shoes.

Ingestion:

Do NOT induce vomiting. Give water to drink. Get medical attention immediately. NEVER GIVE ANYTHING BY MOUTH TO AN UNCONSCIOUS PERSON.

Inhalation:

Remove to fresh air. If not breathing, give artificial respiration. If breathing is difficult, give oxygen. Get medical attention.

*** Section 5 - Fire Fighting Measures ***

Material Safety Data Sheet

Material Name: ALKALINE RUST REMOVER T-4181 **ID: 238022**

Flash Point:	NA	**Method Used:**		**Flammability Classification:**	
Upper Flammable Limit (UFL):	NA	**Lower Flammable Limit (LFL):**	NA		

Fire & Explosion Hazards:

Avoid breathing fumes from fire exposed material.

Extinguishing Media:

Use water spray or water fog

Fire-Fighting Instructions:

Use water spray to cool containers exposed to fire. Fire fighters and others who may be exposed to products of combustion should wear full fire fighting turn out gear (full Bunker Gear) and self-contained breathing apparatus (pressure demand NIOSH approved or equivalent). Fire fighting equipment should be thoroughly decontaminated after use.

*** Section 6 - Accidental Release Measures ***

Spill or Leak

Stop the leak, if possible. Ventilate the space involved. Contain, sweep up, place in container for disposal. Shut off or remove all ignition sources. Prevent waterway contamination. Construct a dike to prevent spreading. Collect run-off and transfer to drums or tanks for later disposal.

Clean up procedures: Transfer to containers in preparation for later disposal. Avoid generation of vapors. Place in non-sparking containers for recovery or disposal. Remove from spill location. Decontaminate area.

*** Section 7 - Handling and Storage ***

Handling Procedures:

Do not breathe dust. Do not get in eyes, on skin or clothing. Wash thoroughly after handling. Keep container tightly closed. Empty container may contain hazardous residues. Do not enter confined spaces unless adequately ventilated. To avoid rapid temperature rise, violent spattering, or explosive eruptions: always add caustic to water when mixing. Never add water to a caustic when mixing.

Storage Procedures:

Store in a cool, dry place. Avoid excessive heat. Store out of direct sunlight in a cool, well-ventilated place.

*** Section 8 - Exposure Controls / Personal Protection ***

Component Exposure Limits

Sodium hydroxide (1310-73-2)

ACGIH: C 2 mg/m3
OSHA: 2 mg/m3 TWA
NIOSH: C 2 mg/m3

Triethanolamine (102-71-6)

ACGIH: 5 mg/m3 TWA

Diethanolamine (111-42-2)

ACGIH: 2 mg/m3 TWA
skin - potential for cutaneous absorption
NIOSH: 3 ppm TWA; 15 mg/m3 TWA

Engineering Controls:

Investigate engineering techniques to reduce exposures below airborne exposure limits. Provide ventilation if necessary to control exposure levels below airborne exposure limits (see below). If practical, use local mechanical exhaust ventilation at sources of air contamination such as open process equipment. Consult ACGIH ventilation manual or NFPA Standard 91 for design of exhaust systems.

Material Safety Data Sheet

Material Name: ALKALINE RUST REMOVER T-4181 **ID: 238022**

PERSONAL PROTECTIVE EQUIPMENT

As prescribed in the OSHA Standard for Personal Protective Equipment (29 CFR 1910.132), employers must perform a Hazard Assessment of all workplaces to determine the need for, and selection of, proper protective equipment for each task performed.

Eyes/Face Protective Equipment:

Where there is potential for eye contact, wear a face shield, chemical goggles, and have eye flushing equipment immediately available.

Skin Protection:

Wear appropriate chemical resistant protective clothing and protective gloves to prevent contact. Consult glove manufacturer to determine appropriate type glove material for given application. Rinse immediately if skin is contaminated. Wash contaminated clothing and clean protective equipment before reuse. Provide a safety shower at any location where skin contact can occur. Wash skin thoroughly after handling.

Respiratory Protection:

Avoid breathing dust. When airborne exposure limits are exceeded (see below), use NIOSH approved respiratory protection equipment appropriate to the material and/or its components. Consult respirator manufacturer to determine appropriate type equipment for given application. Observe respirator use limitations specified by NIOSH or the manufacturer. For emergency and other conditions where exposure limit may be significantly exceeded, use an approved full face positive-pressure, self-contained breathing apparatus or positive-pressure airline with auxiliary self-contained air supply. Respiratory protection programs must comply with 29 CFR § 1910.134.

*** Section 9 - Physical & Chemical Properties ***

Physical State:	Solid	**Appearance:**	Off white, granular mixture
Odor:		**Vapor Pressure:**	NA
Vapor Density:	NA	**Boiling Point:**	NA
Melting Point:	NE	**Specific Gravity:**	NA
pH:	> 12.0	**Viscosity:**	
VOC:	1.5% (Calculated)	**Solubility Water:**	Soluble

*** Section 10 - Chemical Stability & Reactivity Information ***

Chemical Stability:

This material is chemically stable under normal and anticipated storage and handling conditions.

Incompatibility:

Avoid contact with strong acids. Contains organic amine compounds. Nitrite based materials should not be added due to possible nitrosoamine formation.

Decomposition Products:

Oxides of carbon, nitrogen compounds.

Hazardous Polymerization:

Hazardous polymerization is not known to occur.

*** Section 11 - Toxicological Information ***

Acute Toxicity:

A: General Product Information

No information available for the product.

B: Component Analysis - LD50/LC50

Triethanolamine (102-71-6)
Oral LD50 Rat : 4920 uL/kg
Oral LD50 Mouse : 5846 mg/kg
Dermal LD50 Rabbit : >20 mL/kg

Diethanolamine (111-42-2)

Material Safety Data Sheet

Material Name: ALKALINE RUST REMOVER T-4181 **ID: 238022**

Oral LD50 Rat : 620 uL/kg
Oral LD50 Mouse : 3300 mg/kg
Dermal LD50 Rabbit : 7640 uL/kg

Component Carcinogenicity

Diethanolamine (111-42-2)

IARC: Monograph 77, 2000 (Group 3 (not classifiable))

Chronic Toxicity

No information available for the product.

Epidemiology:

No information available for the product.

Neurotoxicity:

No information available for the product.

Mutagenicity:

No information available for the product.

Teratogenicity:

No information available for the product.

*** Section 12 - Ecological Information ***

Ecotoxicity:

A: General Product Information

No information available for the product.

B: Component Analysis - Ecotoxicity - Aquatic Toxicity

Triethanolamine (102-71-6)

Test & Species		Conditions
	LC50 (24 hr) goldfish	5000 mg/L.

Diethanolamine (111-42-2)

Test & Species		Conditions
LC50 (96 hr) fathead minnow	>100 mg/L.	Static.
LC50 (24 hr) goldfish	800 mg/L.	pH 9.6.
LC50 (24 hr) goldfish	5000 mg/L.	pH 7.0.
EC50 (5 min) Photobacterium phosphoreum	73 mg/L Microtox test.	15 °C.

Environmental Fate:

No data is available concerning the environmental fate, biodegradation or bioconcentration for this product.

*** Section 13 - Disposal Considerations ***

US EPA Waste Numbers & Descriptions:

A: General Product Information

Recover, reclaim or recycle when practical. Dispose of in accordance with federal, state and local regulations. Note: Chemical additions to, processing of, or otherwise altering this material may make this waste management information incomplete, inaccurate, or otherwise inappropriate. Furthermore, state and local waste disposal requirements may be more restrictive or otherwise different from federal laws and regulations.

B: Component Waste Numbers

No EPA Waste Numbers are applicable for this product's components.

Material Safety Data Sheet

Material Name: ALKALINE RUST REMOVER T-4181 **ID: 238022**

*** Section 14 - Transportation Information ***

US DOT Information

Shipping Name: Please refer to the container label for transportation information.

*** Section 15 - Regulatory Information ***

US Federal Regulations

A: General Product Information

This product is considered hazardous under 29 CFR 1910.1200 (Hazard Communication).

B: Component Analysis

This material contains one or more of the following chemicals required to be identified under SARA Section 302 (40 CFR 355 Appendix A), SARA Section 313 (40 CFR 372.65) and/or CERCLA (40 CFR 302.4).

Sodium hydroxide (1310-73-2)

CERCLA: final RQ = 1000 pounds (454 kg)

Diethanolamine (111-42-2)

SARA 313: form R reporting required for 1.0% de minimis concentration

CERCLA: final RQ = 100 pounds (45.4 kg)

SARA 311/312: Acute: Y **Chronic:** Y **Fire:** N **Pressure:** N **Reactive:** N

State Regulations

A: General Product Information

No additional information available.

B: Component Analysis - State

The following components appear on one or more of the following state hazardous substances lists:

Component	CAS #	CA	FL	MA	MN	NJ	PA
Sodium hydroxide	1310-73-2	Yes	Yes	Yes	Yes	Yes	Yes
Triethanolamine	102-71-6	No	Yes	Yes	Yes	No	Yes
Diethanolamine	111-42-2	Yes	Yes	Yes	Yes	Yes	Yes

Other Regulations

A: General Product Information

All components are on the U.S. EPA TSCA Inventory List.

Material Safety Data Sheet

Material Name: ALKALINE RUST REMOVER T-4181 **ID: 238022**

B: Component Analysis - InventoryComponent Analysis - Inventory

Component	CAS #	TSCA	DSL	EINECS
Sodium hydroxide	1310-73-2	Yes	Yes	Yes
Triethanolamine	102-71-6	Yes	Yes	Yes
Diethanolamine	111-42-2	Yes	Yes	Yes
Sodium gluconate	527-07-1	Yes	Yes	Yes

C: Component Analysis - WHMIS IDL

The following components are identified under the Canadian Hazardous Products Act Ingredient Disclosure List:

Component	CAS #	Minimum Concentration
Sodium hydroxide	1310-73-2	1%; English Item 1442; French Item 998
Triethanolamine	102-71-6	1%; English Item 1621; French Item 1663
Diethanolamine	111-42-2	1%; English Item 569; French Item 693

*** Section 16 - Other Information ***

Key/Legend

EPA = Environmental Protection Agency; TSCA = Toxic Substance Control Act; ACGIH = American Conference of Governmental Industrial Hygienists; IARC = International Agency for Research on Cancer; NIOSH = National Institute for Occupational Safety and Health; NTP = National Toxicology Program; OSHA = Occupational Safety and Health Administration; NFPA = National Fire Protection Association; HMIS = Hazardous Material Identification System; CERCLA = Comprehensive Environmental Response, Compensation and Liability Act; SARA = Superfund Amendments and Reauthorization Act

The information presented herein is believed to be factual as it has been derived from the works and opinions of persons believed to be qualified experts; however, nothing contained in this information is to be taken as a warranty or representation for which Henkel Surface Technologies bears legal responsibility. The user should review any recommendations in the specific context of the intended use to determine whether they are appropriate.

Contact: Regulatory Affairs and Product Acceptance
Contact Phone: (248) 593-9300

MATERIAL SAFETY DATA SHEET

Westco Chemicals, Inc.
11312 Hartland Street
North Hollywood, California 91605
(213) 877-0077
(818) 980-1152

EMERGENCY CONTACT :

CALL CHEMTREC : DAY OR NIGHT
(800)424-9300

SUBSTANCE IDENTIFICATION

CAS NO	144-62-7	HMIS
SUBSTANCE	OXALIC ACID	HEALTH---1
TRADE NAMES/SYNONYMS	ETHANEDIOIC ACID	FLAMMABILITY--1
CHEMICAL FAMILY	ORGANIC ACID	REACTIVITY---0
		PERSONAL PROTECTION--F
MOLECULAR FORMULA	HOOCCOOH 2H2O	MOLECULAR WT---126.07

COMPONENTS AND CONTAMINANTS

PERCENT	OXALIC ACID - 99.6%
OTHER CONTAMINANTS	INERT SALTS - 0.4%
EXPOSURE LIMITS	NK

PHYSICAL DATA

DESCRIPTION	WHITE CRYSTALLINE POWDER, ODORLESS	
VAPOR DENSITY	NA	MELTING PT---101 DEG C
VAPOR PRESSURE	NA	BOILING PT---186 DEG C DECOMPOSES
EVAPORATION RATE	NA	% VOLATILE---NA
SOLUBILITY IN WATER	SOLUBLE - 11.7%	SPECIFIC GRAVITY---1.653

HOW TO DETECT THIS SUBSTANCE : CHEMICAL ANALYSIS

FIRE AND EXPLOSION DATA

FLASH POINT	NA	
FIRE EXTINGUISHING MTRLS	WATER, DRY CHEMICALS, FOAM, CO2	FLAMMABLE LIMITS---NK
SPECIAL FIRE FIGHTING PROCEDURES	SELF CONTAINED BREATHING APPARATUS. WEAR FACE SHIELD OR SAFETY GOGGLES	
UNUSUAL FIRE AND EXPLOSION HAZARDS	NONE. DECOMPOSITION PRODUCTS INCLUDE CARBON MONOXIDE & FORMIC ACID WHICH ARE TOXIC & FLAMMABLE	

TRANSPORTATON DATA

DOT CLASSIFICATION	NONE
DOT LABEL	NONE
UN/NA NUMBER	NONE
SPECIAL INSTRUCTIONS	NONE

TOXICITY

DANGER-CORROSIVE
LD/50 - 71 mg/kg 1mg/M3 ACGIH - PEL
DO NOT EAT OR SMOKE IN WORK AREA

HEALTH EFFECTS AND FIRST AID

INHALATION	
ACUTE EXPOSURE	TOXIC-INHALATION OF DUST IS POISONOUS
CHRONIC EXPOSURE	NK
FIRST AID	REMOVE TO FRESH AIR. ADMINISTER OXYGEN IF NECESSARY
SKIN CONTACT	
ACUTE EXPOSURE	STRONG IRRITANT TO SKIN & MUCOUS MEMBRANES. MAY CAUSE BURNS
CHRONIC EXPOSURE	NK
FIRST AID	WASH WITH SOAP & WATER
EYE CONTACT	
ACUTE EXPOSURE	MAY CAUSE CORNEAL DAMAGE
CHRONIC EXPOSURE	NK
FIRST AID	FLUSH WITH WATER FOR 15 MINUTES. OBTAIN ASSISTANCE FROM OPHTHAMOLOGIST
INGESTION	
ACUTE EXPOSURE	POISONOUS IF SWALLOWED. MAY CAUSE GASTROENTERITIS
CHRONIC EXPOSURE	NK
FIRST AID	DO NOT INDUCE VOMITING. GIVE MILK. CALL A DOCTOR
ANTIDOTE	MILK OF MAGNESIA OR ANTACIDS
SUSPECTED CANCER AGENT	NO
RECOMMENDATIONS TO A DOCTOR	TREAT SYMPTOMATICALLY. NEUTRALIZE WITH SODIUM BICARBONATE

REACTIVITY DATA

STABILITY	STABLE
INCOMPATIBILITIES	STRONG OXIDIZERS
DECOMPOSITION PRODUCTS	FORMIC ACID, CARBON DIOXIDE
HAZARDOUS POLYMERIZATION	WILL NOT OCCUR
CONDITIONS TO AVOID	HEAT, MOISTURE (HYGROSCOPIC), DUSTING

SPILL AND LEAK PROCEDURES

OCCUPATIONAL SPILL	SWEEP UP AND CONTAINERIZE. DISSOLVE IN LARGE VOLUME OF WATER AND NEUTRALIZE WITH SODA ASH
WASTE DISPOSAL METHODS	INCINERATION OR FLUSH INTO SEWER WITH LARGE VOLUME OF WATER AFTER NEUTRALIZATION

NOTE : DISPOSE OF ALL WASTES IN ACCORDANCE WITH FEDERAL, STATE AND LOCAL REGULATIONS .

SPECIAL HANDLING INFORMATION

VENTILATION	LOCAL EXHAUST
RESPIRATORY PROTECTION	DUST MASK/NIOSH RESPIRATOR
CLOTHING	RUBBER BOOTS, RUBBER APRON
GLOVES	RUBBER
EYE PROTECTION	SAFETY GOGGLES OR FULL FACE MASK

ADDITIONAL INFORMATION

THIS MSDS WAS OBTAINED FROM RELIABLE SOURCES. HOWEVER, IT IS PROVIDED WITH OUT REPRESENTATION OR WARRANTY EXPRESSED OR IMPLIED REGARDING ACCURACY OR CORRECTNESS. CONDITIONS, METHODS OF HANDLING, STORAGE, USE AND DISPOSAL OF THE PRODUCT ARE BEYOND OUR CONTROL OR BEYOND OUR KNOWLEDGE. FOR THIS AND OTHER REASONS, WE ASSUME NO RESPONSIBILITY AND EXPRESSLY DISCLAIM LIABILITY FOR INJURY, LOSS, DAMAGE OR EXPENSES ARISING FROM THE USE OF THIS PRODUCT.

AUTHORIZED BY WESTCO CHEMICALS, INCORPORATED

CREATION DATE	5/25/90
REVISION DATE	3/6/98

NA=NOT APPLICABLE ND=NOT DETERMINED NK=NOT KNOWN

Material Safety Data Sheet
May be used to comply with OSHA's Hazard Communication Standard, 29 CFR 1910.1200. Standard must be consulted for specific requirements.

U.S. Department of Labor
Occupational Safety and Health Administration
(Non-Mandatory Form)
Form Approved
OMB No. 1218-0072

IDENTITY (As Used on Label and List)
Radiacwash

Note: Blank spaces are not permitted. If any item is not applicable, or no information is available, the space must be marked to indicate that.

Section I

Manufacturer's Name Atomic Products Corp.	Emergency Telephone Number (516) 924-9000
Address (Number, Street, City, State, and ZIP Code) 49 Natcon Drive	Telephone Number for Information (516) 924-9000
Shirley, NJ 11967	Date Prepared 2/22/88
	Signature of Preparer (Optional) W.S. Gilmore

Section II — Hazardous Ingredients/Identity Information

Hazardous Components (Specific Chemical Identity; Common Name(s))	OSHA PEL	ACGIH TLV	Other Limits Recommended	% (optional)
1) Citric Acid	CAS 77-92-9			2.9
2) Octyl Phenol Condensed with 8 - 10 moles Ethylene Oxide, Triton X100	CAS 9036-19-5			6.0
3) Tetrasodium Ethylenediamine Triacetate	CAS 64-02-8			5.7
4) Benzyldimethyl (2-(2-(P- (1,1,3,3, tetra-methylbutyl) Phenoxy) Ethoxy) Ethyl) Ammonium Chloride, Hyamine 1622	CAS 121-54-0			0.008
5) Mineral Water				85.39

Section III — Physical/Chemical Characteristics

Boiling Point	100°C	Specific Gravity (H_2O = 1)	1.052
Vapor Pressure (mm Hg.)	NA	Melting Point Freezing Point	0.3°C
Vapor Density (AIR = 1)	NA	Evaporation Rate (water = 1)	1.2

Solubility in Water
Infinite (completely miscible)

Appearance and Odor
Bluish transparent liquid - slightly pungent odor

Section IV — Fire and Explosion Hazard Data

Flash Point (Method Used) Greater than 214°F	Flammable Limits NA	LEL	UEL

Extinguishing Media
Dry powder, foam, carbon dioxide

Special Fire Fighting Procedures
Fire fighters should wear self-contained breathing apparatus.

Unusual Fire and Explosion Hazards
Decomposition products may be toxic.

Section V — Reactivity Data

Stability			Conditions to Avoid
	Unstable		
	Stable	X	Metal nitrates

Incompatibility (Materials to Avoid): Metallic surfaces for prolonged time periods (pH 5)

Hazardous Decomposition or Byproducts:

Hazardous Polymerization			Conditions to Avoid
	May Occur		
	Will Not Occur	X	None

Section VI — Health Hazard Data

Route(s) of Entry: Inhalation? No Skin? Yes Ingestion? Yes

Health Hazards (Acute and Chronic)
Prolonged contact of product with skin may cause irritation, possible allergic reaction.
Oral toxicity is low - LD50 Rate = >800 mg/kg

Carcinogenicity: NTP? None IARC Monographs? None OSHA Regulated? None

Signs and Symptoms of Exposure
Repeated contact with skin may cause drying of skin and moderate irritation.
Some allergic properties experienced.

Medical Conditions Generally Aggravated by Exposure: Pre-existing eye, skin and respiratory disorders may be aggravated by exposure to product.

Emergency and First Aid Procedures
Inhalation: Remove to fresh air, Eyes: Flush with water for at least 15 minutes.
Skin: Wash thoroughly with soap and water, Ingestion: Drink plenty of water, call physician

Section VII — Precautions for Safe Handling and Use

Steps to Be Taken in Case Material is Released or Spilled
Soak up material with absorbant materials and place in tight container.

Waste Disposal Method
Place in appropriate disposal facility in compliance with Federal, State and Local regulations.

Precautions to Be Taken in Handling and Storing
Store in closed containers away from heat.

Other Precautions: None

Section VIII — Control Measures

Respiratory Protection (Specify Type)
Wear NIOSH approved respirator if required

Ventilation			
	Local Exhaust: In open areas	Special:	None
	Mechanical (General): In confined areas	Other:	None

Protective Gloves: Impervious gloves Eye Protection: Goggles

Other Protective Clothing or Equipment
Barrier creams, aprons, overalls to avoid contact.

Work/Hygienic Practices
Observe conditions of good industrial hygiene - no eating, smoking or drinking.

INEEL Idaho National Engineering and Environmental Laboratory

February 26, 2002 CCN 30195

Mr. J. T. Case, Director
INTEC Waste Program
U.S. Department of Energy
Idaho Operations Office
850 Energy Drive, MS 1154
Idaho Falls, ID 83401-1563

CONTRACT NO. DE-AC07-99ID13727 - TRANSMITTAL OF *NWCF EVAPORATOR TANK SYSTEM 2001 OFFGAS EMISSIONS INVENTORY*, INEEL/EXT-02-00198

Dear Mr. Case:

A copy of the external report *NWCF Evaporator Tank System 2001 Offgas Emissions Inventory* is enclosed. This report provides semi-volatile and volatile organic, metals, particulate, and acid gas emissions data and rates for the New Waste Calciner Facility Evaporator Tank System (NWCF ETS) as measured during operations from May through June 2001. A detailed assessment of the data quality has also been provided.

The emissions inventory for the NWCF ETS was completed to: 1) demonstrate the applicability of standard EPA offgas sampling methods and 2) characterize the constituents of primary concern for this offgas stream. Only minor variations to the EPA methods were required to compensate for radiological exposure and safety concerns and the below-grade sampling port location.

Emissions rates for the measured constituents were compared to rates measured for the NWCF Calciner and scaled to NWCF Calciner Screening Level Risk Assessment parameters to provide comparisons to the EPA hazard quotient and cancer risk guidance. The emissions rates and human health risk values for the NWCF ETS were lower than those for the NWCF Calciner.

The enclosed report fulfills a performance measure in Program Execution Guidance EM-D-33 FY-2002 and internal milestone A7131021 in control account C.1.06.01.07.13 Waste Sampling and Characterization.

Questions regarding the content of this report should be addressed to L. J. Young at 526-3132 or R. D. Boardman at 526-3732.

Sincerely,

for JH VALENTINE

J. H. Valentine, Manager of Projects
High Level Waste Program

rmg

Enclosure

cc: A. Clark, MS 5108
C. D. Cutler*, MS 3810
R. J. Hoyles*, DOE-ID, MS 1221
R. J. Kimmel, DOE-ID, MS 1154
K. A. Lockie, DOE-ID, MS 1154
S. G. Stiger*, MS 3898
* w/o Enclosure

bcc: R. D. Boardman, MS 5218
R. R. Bone, MS 5117
K. C. Coughlan, MS 3211
D. V. Croson, MS 5218 NVC
S. L. Dickinson, MS 5111
K. M. Lamb, MS 5218
J. P. Law, MS 5111
L. A. Matejka, MS 5306
J. A. Nenni, MS 5218
J. D. Pyle, MS 5117
J. M. White, MS 5111
P. K. Yeary,* MS 3211
L. J. Young, MS 5218
Correspondence Control,* MS 3106
J. H. Valentine File (JHV-016-02)
*w/o Enclosure

Uniform File Code: 6153.101.09
Disposition Authority: A16-1.3
Retention Schedule: Cut off at the end of the fiscal year. Destroy 5 years after cut off.

NOTE: Original disposition authority, retention schedule, and Uniform Filing Code applied by the sender may not be appropriate for all recipients. Make adjustments as needed.

INEEL/EXT-02-00198

NWCF Evaporator Tank System 2001 Offgas Emissions Inventory

R. D. Boardman
K. M. Lamb
L. A. Matejka
J. A. Nenni

February 2002

Idaho National Engineering and Environmental Laboratory
High Level Waste Program
Bechtel BWXT Idaho, LLC
Idaho Falls, ID 83415

Prepared for the
U.S. Department of Energy
Assistant Secretary for Environmental Management
Under DOE Idaho Operations Office
Contract DE-AC07-99ID13727

ABSTRACT

An offgas emissions inventory and liquid stream characterization of the Idaho New Waste Calcining Facility (NWCF) Evaporator Tank System (ETS), formerly known as the High Level Liquid Waste Evaporator (HLLWE), has been completed. The emissions rates of volatile and semi-volatile organic compounds, multiple metals, particulate, and hydrochloric acid (HCl)/Cl_2 were measured in accordance with an approved Quality Assurance Project Plan (QAPjP) and Test Plan that invoked U.S. Environmental Protection Agency (EPA) standard sample collection and analysis procedures. Offgas samples were collected during the start up and at the end of evaporator batches when it was hypothesized the emissions would be at peak rates. Corresponding collection of samples from the evaporator feed, overhead condensate, and bottoms was made at approximately the same time as the emissions inventory to support material balance determinations for the evaporator process. The data indicate that organic compound emissions are slightly higher at the beginning of the batch while metals emissions, including mercury, are slightly higher at the end of the evaporator batch. The maximum emissions concentrations are low for all constituents of primary concern. Mercury emissions were less than 5 ppbv (< 40 μg/dscm), while the sum of HCl and Cl_2 emissions was less than 1 ppmv. The sum of all organic emissions also was less than 1 ppmv. The estimated hazardous quotient (HQ) for the evaporator was 6.2e-6 as compared to 0.25 for the EPA target criteria. The cancer risk was 1.3e-10 compared to an EPA target of 1e-5.

SUMMARY

This report presents the 2001 effluent gas emissions inventory data for the NWCF Evaporator Tank System (ETS) operated at the INTEC. Liquid wastes generated from decontamination activities are stored in the INTEC High Level Waste Tank Farm Facility (TFF). The Tank Farm wastes are currently being concentrated using the NWCF ETS (formally known as High Level Liquid Waste Evaporator, or HLLWE). The NWCF ETS currently operates under Resource Conservation and Recovery Act (RCRA) interim status. A RCRA Part B permit application for this unit is being prepared and will be submitted in FY-2003. In order to support the permitting activities, the feed and output streams were characterized during evaporator operations in May and June, 2001. During this time, the NWCF ETS was being used to reduce the volume of a blend of two parts by volume of solution from WM-184 and one part by volume of solution from WM-181. Both of these tanks contained sodium-bearing waste (SBW).

The NWCF ETS is a single-stage, thermal siphon, batch evaporator. Dilute Tank Farm liquid wastes are semi-continuously fed to the evaporator to maintain a constant level in the evaporator. The system consists of a feed tank (VES-NCC-152), a flash column (VES-NCC-150), a reboiler (HE-NCC-350), and a condenser (VES-NCC-151). Blended tank farm wastes are added to the flash column via the feed tank. When the level in the flash column reaches its normal operating level, steam is introduced into the shell side of the evaporator reboiler. Once the desired specific gravity is reached, the concentrated solution is cooled and returned to the Tank Farm. Each batch generally requires 10-16 hours to process, followed by 10-16 hours to refill the feed tanks and to attend to waste transfers back to the Tank Farm.

The NWCF ETS overhead vapor is condensed and sent to the INTEC Process Equipment Waste Evaporator (PEWE) to be re-evaporated. Non condensable and purge gasses are vented from the feed tank and the condenser to the NWCF equipment vent system. The combined offgas passes through the NWCF high-efficiency particulate air (HEPA) filters and then through the Atmospheric Protection System (APS) before being discharged from the main INTEC stack with other vessel offgas and building ventilation air. The offgas tie-in sample location previously used to sample the NWCF Calciner offgas stream was determined to be the best location for sampling the NWCF ETS emissions.

Scope and Approach

The Tank Farm wastes are highly acidic (mainly nitric acid) and contain several RCRA metals, including mercury, and trace amounts of volatile and semi-volatile hazardous organic compounds which were introduced into the Tank Farm Facility by previous disposal of laboratory analytical wastes, NWCF Calciner scrub solution recycle, and organic solvent cleaning. Those components with low boiling points are released to the NWCF ETS offgas system during waste transfers, mixing, and evaporation. Trace amounts of heavy, nonvolatile hydrocarbons may also exist in the waste feed solutions; however, emissions of the nonvolatile hydrocarbons and also the nonvolatile metals may occur due to aerosol entrainment from the evaporator. The majority of the entrained droplets are believed to be collected in the offgas condensers, mist eliminators, and HEPA filters.

The scope of the NWCF ETS process effluent gas emissions inventory included:

- Measurement of the NWCF offgas duct velocity, temperature, and flowrate during operation of the NWCF ETS
- Manual offgas sampling and analysis for particulate matter (PM), HCl, Cl_2, selected metals, volatile organic compounds (VOCs), and semi-volatile organic compounds (SVOCs)
- Measurement of oxygen concentrations

Standard EPA sample collection and analysis methods were used to collect the offgas samples. Sampling was conducted following standard EPA methodology for emissions compliance testing, with attention being given to the following:

- Development and adherence to an approved project quality assurance/quality control plan
- Implementation of chain-of-custody (COC)/requests-for-analysis (RFA) and master sample collection lists that utilize and implement an in-field sample tracking and sample identification number verification
- Development of target analyte lists (TAL) and precision, accuracy, representativeness, completeness, and comparability (PARCC) data quality objectives
- Collection of samples using checklists to record train set up, sample collection data, and sample recovery steps
- Collection and analysis of reagent blanks, trip blanks, and field blanks to achieve prescribed data quality objectives
- Sample collection monitoring by a Project Quality Assurance Officer (PQAO)
- Application of EPA Solid Waste (SW)-846 and 40 Code of Federal Regulations (CFR) 60 Appendix A reference methods for sample analysis.
- Multiple reviews and verifications of field data, analytical data, process data, and resultant calculations of emissions rates

Samples of the feed were analyzed prior to initiation of processing the blend in the NWCF ETS to ensure that the chemistry of the feed solution was compatible with the process equipment. Samples of the condensed overheads and the concentrated bottoms from the first several batches processed were analyzed to ensure that the chemistry of those streams was compatible with down-stream process equipment. The results of these analyses have been included in this report to provide a resource for process permitting discussions and planning.

At the beginning of the offgas sample collection period, the vertical gas velocity profile and swirl angle in the duct were measured to determine an appropriate fixed-point location to collect the offgas samples. Sample contamination survey trains and routine

radiological surveys and screenings were completed throughout the sample collection period to ensure that the samples shipped to the contract analytical laboratory met the labs radioactive materials license criteria. At the end of the sample collection period, the sample probe was removed from the duct and rinsed with acetone and nitric acid. The acetone and nitric acid probe rinses were analyzed for PM and metals.

A set of two runs was completed for each EPA sample train configuration at the beginning and another at the end of evaporator batches. This provided a total of four runs for each method to compare emissions trends at the beginning and end of the evaporator batches. Oxygen concentrations were monitored during each sample train run. The oxygen concentrations in the duct were consistently found to be similar to ambient air conditions. Therefore, it was not necessary to constantly operate the oxygen monitor.

Moisture levels in the offgas were determined from gravimetric and/or volumetric changes in the sample train resins and impingers, respectively. The offgas moisture level was typically less than the dew point of the sample gas passing through the sample collection train condensers. At the most, only 1-2 mL net condensate was collected in any of the condensate knockout impingers.

Data Quality Assessment

All of the planned emissions inventory samples data and associated quality assurance/quality control (QA/QC) samples were collected in accordance with the test plan (PLN-879) and Quality Assurance Project Plan (PLN-880) which were developed and approved for this project. An extensive discussion is provided in the report body regarding conformance of the sample collection activities with the procedures and EPA Method requirements, performance of the QA/QC samples, sampling surrogates, and internal standards.

Although an independent review of the data by the INEEL Sample Management Office (SMO) was not completed, the analytical data reports and data reduction calculations were reviewed by the contract laboratory Quality Officer, the Project Technical Leads, and the BBWI Project Quality Assurance Officer. All of the analytical data and offgas emissions results are judged to be useful for their intended purpose of completing an emissions inventory for the NWCF ETS system. The results are applicable to, and bounded by, the 2:1 volumetric blend of Tank WM-184 and Tank WM-181 feed composition, and NWCF ETS process operating parameters and conditions corresponding to the offgas sampling period.

Emissions Results

The concentration levels of the 20 highest VOC compounds emitted from the evaporator are plotted in Figure S-1. In general, volatile organic emissions are slightly higher at the start of an evaporator batch. The two highest volatile organics emitted from

the NWCF ETS were dodecane and acetone, which on a volumetric basis are only 50 ppbv and 30 ppbv, respectively. Acetone was also detected in the feed to the NWCF Calciner. Dodecane was not a target analyte for the liquid feed and therefore was not measured.

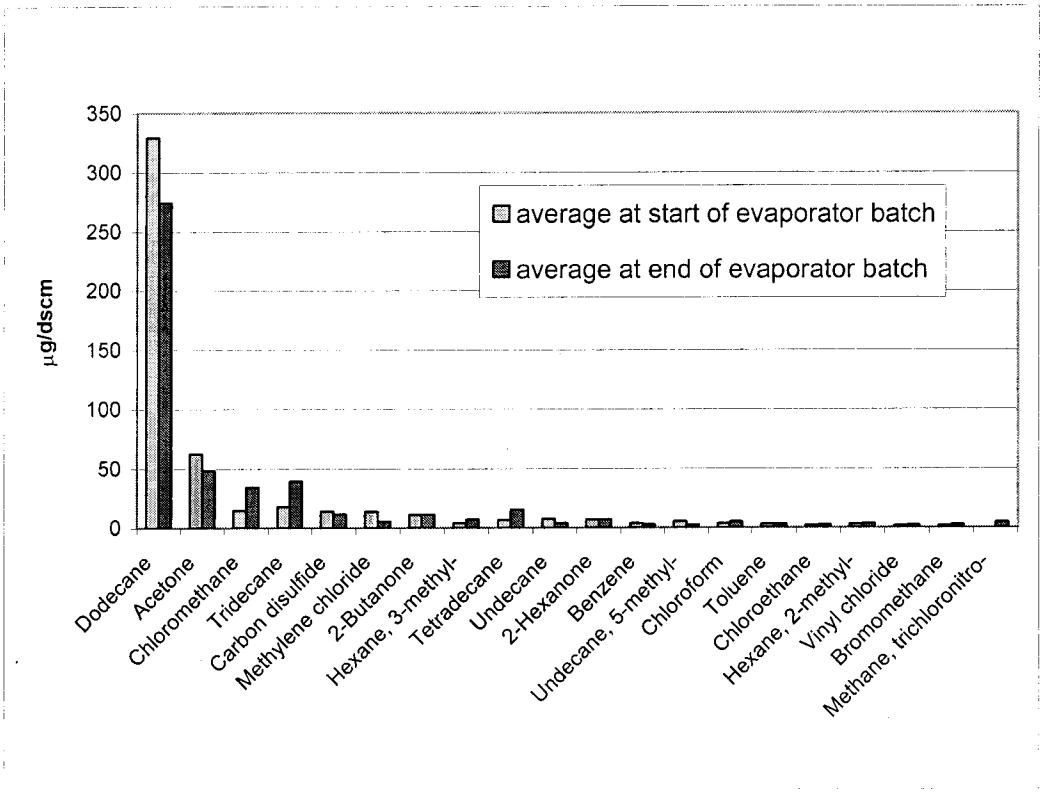

Figure S-1. Comparison of volatile organic emissions at the beginning and end of evaporator batches.

The top 20 SVOCs measured in the offgas stream are plotted in Figure S-2. SVOC emissions also appear to be slightly higher at the start of the evaporator batch. Benzoic acid (a target analyte) and benzaldehyde (a tentatively identified compound) were the two most prevalent semi-volatile organics emitted during operation of the NWCF ETS. The maximum emissions concentrations for benzoic acid and benzaldehyde were 310 ppbv and 80 ppbv, respectively.

Nearly all of the compounds are derivatives of benzene or other cyclic compounds and are possibly the products of incomplete combustion of the kerosene used to heat the Calciner. With the exception of benzoic acid, all of the SVOC species emitted from the evaporator were also detected during the NWCF Calciner offgas emissions inventory (Boardman 2001). It is therefore postulated that these compounds entered the Tank Farm System when Calciner scrub was recycled to the tank farm. They could also be formed by oxidation of benzene and toluene in the acidic waste solutions.

On a volumetric basis, the sum of all volatile and semi-volatile organics is less than 1 ppm. The hourly total emissions rate for all volatile and semi-volatile organic emissions was less than 0.02 lbs/hr.

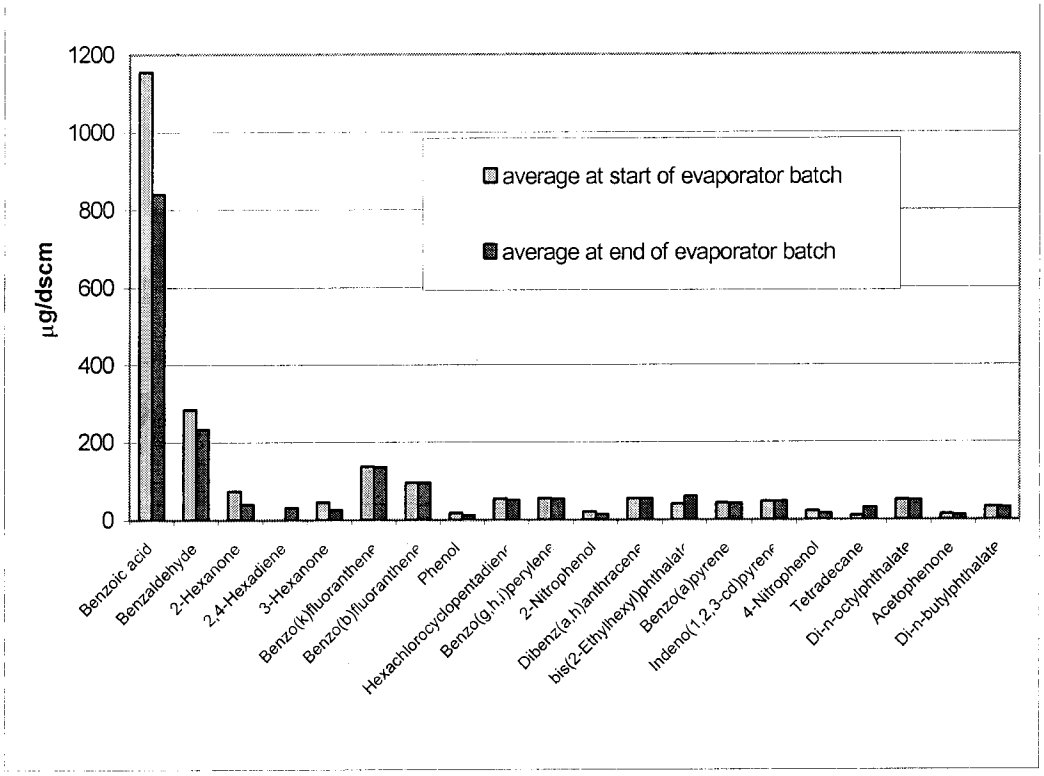

Figure S-2. Comparison of semi-volatile organic emissions at the beginning and end of evaporator batches.

The average metals emissions rates at the beginning and end of evaporator batches are plotted in Figure S-3. As anticipated, metals emissions, including mercury, were typically higher at the end of an evaporator batch when the evaporator solution reached its maximum density. The emissions of all metals species appear to correlate with the solution density.

Total particulate and chloride emissions rate averages at the start and end of two evaporator batches were very low. The sum of chloride emission contributions from HCl and Cl_2 was less than 1 ppmv. Particulate emissions were slightly higher at the beginning of the batch which followed the trend of the semi-volatile organic species emissions.

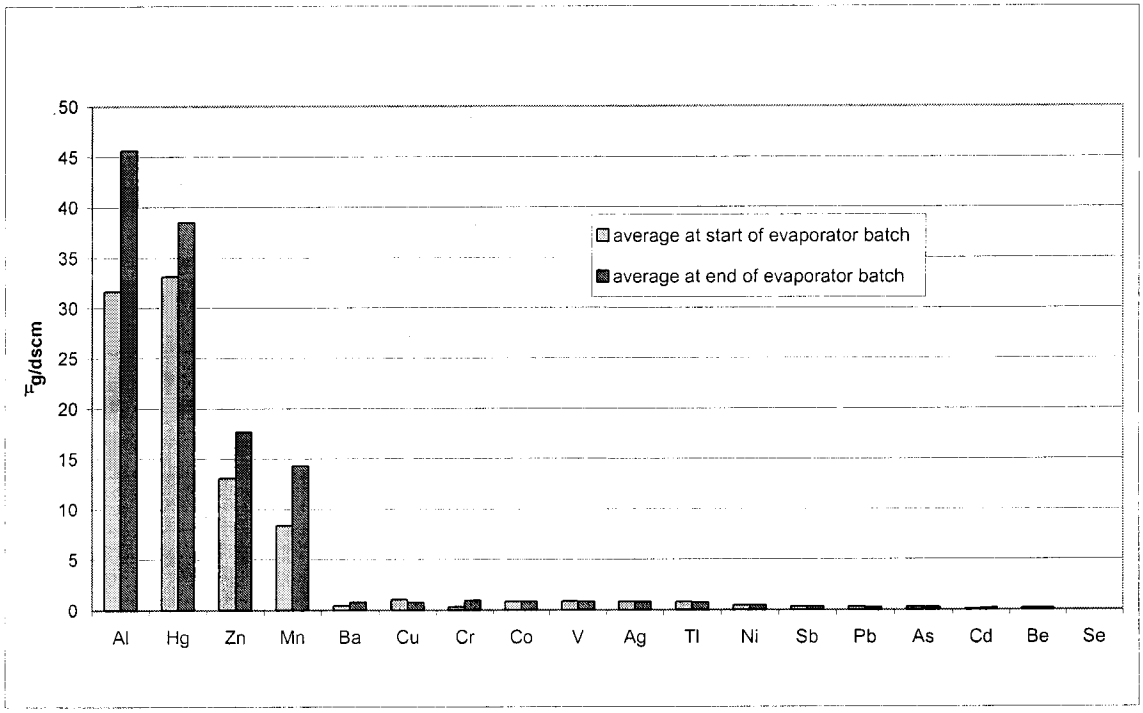

Figure S-3. Comparison of metals emissions at the beginning and end of evaporator batches (not including final probe rinse species apportionment).

Emissions Risk

The emission rate measurements were used to calculate the risk to human health. Pollutants from the NWCF ETS are released from the same point (*i.e.*, the INTEC main stack) and under the same conditions as NWCF Calciner emissions. Therefore, to a close approximation, the NWCF ETS hazards and risks can be scaled using the risk terms previously determined for the NWCF Calciner operations (Boardman 2001).

It was observed that the emissions rates, and hence component-specific risk contributions, were generally much lower from the NWCF ETS than from the NWCF Calciner. Most of the materials "found" were present at levels below the analytical laboratory reporting limits. The summed hazardous quotient (HQ) for all emissions from the NWCF ETS was 6.2e-6 as compared to the EPA target criteria of 0.25. The cancer risk was 1.3e-10 compared to an EPA target of 1e-5. The semi-volatiles were the largest contributor to the HQ and the Risk. The most significant species was a phthalate (bis(2 ethylhexyl)phthalate) which is a common contaminate from plastics present in laboratory and sampling areas.

In conclusion the measured emissions from the NWCF ETS are extremely low for all categories of pollutants. The estimated cancer risk and health hazard quotient are each several orders less than the limit normally allowed by EPA.

ACKNOWLEDGEMENTS

This report is the result of a concerted effort on the part of several Company support organizations. The authors wish to acknowledge C. N. Woodall, Sr. Technical Specialist, for set up of the sample collection equipment and support during sample collection and shipping, and for chemical and waste management. R.M. Gifford is recognized for administrative support, training coordination, records management, and preparation of this report. The project manager for both the offgas and liquid sampling activities was L. J. Young, who supported technical planning, equipment and sample collection area setup, work authorization prerequisites, and ultimately, the sample collection activities.

CONTENTS

ABSTRACT iii

SUMMARY v

ACKNOWLEDGEMENTS xi

ACRONYMS xvii

1. INTRODUCTION 1

2. NWCF ETS SYSTEM AND OFFGAS SAMPLING LOCATION 3

3. SCOPE AND APPROACH 11

4. RADIOLOGICAL SCREENING RESULTS 18

5. OFFGAS SAMPLE ANALYTICAL RESULTS 21

5.1 Volatile Organic Compounds 22

5.1.1 VOC Target Analyte List 22

5.1.2 VOC Analytical Results 24

5.1.3 VOC Data Quality Assessment 25

5.2 Semi-volatile Organic Compounds 34

5.2.1 SVOC Target Analyte List 35

5.2.2 SVOC Analytical Results 37

5.2.3 SVOC Data Quality Assessment 37

5.3 Metals 43

5.3.1 Metals Target Analyte List 44

5.3.2 Metals Analytical Results 44

5.3.3 Metals Data Quality Assessment 45

5.4 Particulate Matter and Acid Gases 47

5.4.1 Acid Gas Target analytes 47

5.4.2 Analysis of PM and Acid Gases 47

5.4.3 PM and Acid Gas Data Quality Assessment 48

CONTENTS

6. PROCESS STREAM CHARACTERIZATION RESULTS 50

7. PROCESS OPERATING CONDITIONS 58

8. DQO ASSESSMENT AND PROJECT SURVEILLANCE 59

8.1 Documented Field Changes 59

8.1.1 VOC Sample Collection 59

8.1.2 SVOC Sample Collection 60

8.1.3 SCS Trains and Screening 60

8.1.4 Metals and Anions Sample Collection 60

8.1.5 Miscellaneous Decisions 60

8.2 Data Quality Indicators 61

8.3 Sampling Documentation Reviews 62

8.4 Records Management 62

8.5 Review of Spreadsheet Calculations 63

8.6 Analytical Results 64

8.6.1 Data Reporting and Flagging 64

8.6.2 Blank Corrections 65

8.6.3 Data Reporting 65

8.6.4 Analytical QC 65

8.7 Request for Analysis and Chain-of-Custody Forms 67

8.8 Field Assessments by PQAO 68

9. OFFGAS EMISSIONS AND HEALTH RISK 70

9.1 Emissions Rates and Trends 70

9.1.1 Organic Compounds 71

9.1.2 Inorganic Compounds 73

9.2 Emissions Health Risk 76

CONTENTS

10. CONCLUSIONS 81

11. REFERENCES 82

Appendix A. Analytical Data Summaries

Appendix B. Offgas Sampling Data

Appendix C. Process Stream Sampling Data

Appendix D. DCS Data

FIGURES

S-1. Comparison of volatile organic emissions at the beginning and end of evaporator batches viii
S-2. Comparison of semi-volatile organic emissions at the beginning and end of evaporator batches ix
S-3. Comparison of metals emissions at the beginning and end of evaporator batches (not including final probe rinse species apportionment) x
1. NWCF ETS system 5
2. NWCF equipment vent 6
3. Offgas pipe axial view of the offgas tie-in sample location 7
4. Side view of offgas tie-in sample location 8
5. Top view of offgas tie-in sample location 10
6. Average evaporator vessel temperature comparison for SVOC runs at the start and end on the evaporator batch 71
7. Comparison of volatile organic emissions at the beginning and end of evaporator batches 72
8. Comparison of semi-volatile organic emissions at the beginning and end of evaporator batches ... 73
9. Comparison of metals emissions at the beginning and end of evaporator batches (not including final probe rinse species apportionment) 74
10. Comparison of chloride emissions at the beginning and end of evaporator batches 75
11. Comparison of particulate emissions at the beginning and end of the evaporator run with probe particulate apportionment 75
12. NWCF ETS EPA hazards quotient 76
13. NWCF ETS cancer risk by pollutant category 77

TABLES

1. Typical NWCF ETS operating conditions 4
2. Summary of NWCF ETS offgas sample collection and analysis methods 12
3. Summary of samples collected in support of the INEEL NWCF ETS Effluent Gas 15
4. Sample contamination survey train radio-assay results 19
5. Volatile organic compound target analyte list 23
6. Comparison of SMVOC blank sample results 27
7. Volatile Organic Compound (VOC) internal standard recoveries 30
8. Volatile Organic Compound (VOC) surrogate compound recoveries 32
9. SVOC target analyte list 35

CONTENTS

10. SVOC train sample internal standard compound recoveries 39
11. SVOC surrogate compound recoveries 41
12. Metals target analyte list 44
13. Inorganic analyses of feed streams processed during NWCF ETS off-gas emissions sampling 51
14. Inorganic analyses of bottoms streams during NWCF ETS off-gas emissions sampling 53
15. Inorganic analyses of condensate streams during NWCF ETS off-gas emissions sampling 54
16. VOC analyses of NWCF ETS streams during NWCF ETS off-gas emissions sampling 55
17. SVOC analyses of NWCF ETS streams during NWCF ETS off-gas emissions sampling 56
18. Risk scaling of Method 0010 analytes 78
19. Risk scaling for Method 0031 analytes 79
20. Risk scaling for Method 0050 analytes 80
21. Risk scaling for Method 0060 analytes 80

ACRONYMS

ACS	American Chemical Society
ALD	Analytical Laboratory Department
APS	atmospheric protection system
CAS	Chemical Abstract Service
CEMS	continuous emissions monitoring system
CFL	central file location
CFR	Code of Federal Regulations
COC	chain of custody
CVAAS	cold vapor atomic absorption spectroscopy
DF	decontamination factor
D/F	dioxins and furans
DCS	Distributive control system
D.I.	deionized
DOT	Department of Transportation
DQOs	data quality objectives
DWSD	Drinking Water Standards Division
EDD	electronic data deliverables
EMSL	Environmental Monitoring Systems Laboratory
EPA	U. S. Environmental Protection Agency
GC/MS	gas chromatography/mass spectrometry
HCl	hydrochloric acid
HEPA	high-efficiency particulate air (filter)
HQ	hazardous quotient
HRGC/HRMS	high resolution gas chromatography/high resolution mass spectrometry
INEEL	Idaho National Engineering and Environmental Laboratory

INTEC	Idaho Nuclear Technology and Engineering Center
IS	internal standard
L&V	limitations and validation
LCS	laboratory control samples
LCSD	laboratory control samples duplicate
LET&D	Liquid Effluent Treatment and Disposal
MCP	Management Control Procedure (Company Document Indicator)
MDL	method detection limit
MS/MDS	matrix spike/matrix spike duplicate
NWCF	New Waste Calcining Facility
PAH	polycyclic aromatic hydrocarbons
PARCC	precision, accuracy, representativeness, completeness, and comparability
PCBs	polychlorinated biphenyls
PDS	post digestion spikes
PEWE	Process Equipment Waste Evaporator
PLN	Plan (Company Document Designator)
PM	particulate matter
PQAO	Project Quality Assurance Officer
PTL	Project Technical Lead(s)
QA/QC	quality assurance/quality control
QAPjP	quality assurance project plan
RAL	Remote Analytical Laboratory
RCRA	Resource Conservation and Recovery Act
RDL	reliable detection limit
RFA/COC	request-for-analysis/chain-of-custody
RL	reporting limit (analytical laboratory established)

RPD	relative percent difference
RPF	relative potency factor
SAIC	Science Applications International Corporation
SDG	sample delivery group
SMO	Sample Management Office
SMVOC	sampling method for volatile organic compounds
SOW	statement of work
STL	Severn-Trent Laboratory- (Knoxville, Tennessee)
SVOC	semi-volatile organic compound
SW	Solid Waste
TAL	target analyte list
TFF	Tank Farm Facility
TICs	tentatively identified compounds
TOC	total organic carbon
TOS	task order specific (statement of work)
TPR	Technical Requirements Procedure (Company Document Designator)
VOC	volatile organic compound

NWCF Evaporator Tank System
2001 Offgas Emissions Inventory

1. INTRODUCTION

Liquid wastes generated by fuel reprocessing and decontamination activities are stored in the Idaho Nuclear Technology and Engineering Center (INTEC) Tank Farm Facility. The Tank Farm wastes are currently being concentrated using the INTEC New Waste Calcining Facility (NWCF) Evaporator Tank System (ETS) (formally know as High Level Liquid Waste Evaporator HLLWE). The NWCF ETS currently operates under Resource Conservation and Recovery Act (RCRA) interim status. A RCRA Part B permit application for this unit is being prepared and is planned to be submitted in FY-2003. In order to support the permitting activities, the feed and output streams were characterized during evaporator operations in May and June, 2001. Characterization of the NWCF ETS process gaseous emissions were completed in conjunction with liquid feed and concentrated effluent analyses.

A detailed test plan (Test Plan for the HLLWE Effluent Gas Emissions Inventory, PLN-879) and quality assurance project plan (QAPjP- INTEC Quality Assurance Project Plan for the HLLWE Offgas Emissions Inventory Project, PLN-880) were developed for this project. The test plan discusses project organization, training requirements, safety implementation plans, sample collection objectives, and potential NWCF ETS offgas emissions. The QAPjP specifies the quality assurance and quality control (QA/QC) requirements, applicable quality standards, and both Idaho National Engineering and Environmental Laboratory (INEEL) and project-specific procedures for collecting, packaging, preserving, shipping, and analyzing the NWCF ETS offgas samples. The sample collection and analysis methods and procedures adhere to U.S. Environmental Protection Agency (EPA) protocol and technical requirements.

Science Applications International Corporation, Idaho Falls, Idaho (herein referred to as SAIC) was subcontracted to collect and recover the samples using the EPA prescribed procedures and equipment. SAIC also assisted BBWI in calculation of the air emissions rates using the data collected in the field and the sample analytical results. SAIC is recognized for its training and experience as a sample collection team. They previously supported the NWCF Calciner offgas emissions inventory project. Sample collection was performed using checklists and field data sheets.

Severn-Trent Laboratories, Knoxville, Tennessee (herein referred to as STL) performed the offgas sample preparations and analyses. The samples sent to STL were accompanied by a Request-for-Analysis Form (RFA), which documents the project-specific analytical specifications and quality control instructions to the laboratory. As part of the RFA documentation, a Chain-of-Custody (COC) and tractability record was maintained for all sample transfers to the laboratory. An analytical report for the final analytical data (STL 2001) was provided by STL. The analytical report includes a description of the analytical procedures that were used to acquire the data generated in support of this project.

Liquid feed streams and effluents associated with the NWCF ETS were collected in conjunction with the offgas sampling and were analyzed to complete mass balance and emissions inventory calculations. The samples were collected and analyzed under the Balance of Plant Sampling and Analysis Plan (inputs to Process Equipment Waste Evaporator (PEWE) and Liquid Effluent Treatment and Disposal (LET&D)). The liquid stream samples were collected and analyzed remotely to reduce operator and analyst exposure to radiation. Liquid sample collection was performed by the NWCF ETS operators

using double-needle sample collection system. The samples were sent the INTEC Remote Analytical Laboratory (RAL) for analyses.

The purpose of this report is to document and discuss the NWCF ETS offgas emissions inventory results and liquid feed stream analytical results. A technical description of the facility is followed by a description of the sample collection matrix and results. The risk associated with the offgas emissions has also been calculated and is presented herein.

2. NWCF ETS SYSTEM AND OFFGAS SAMPLING LOCATION

The NWCF ETS is a single-stage, thermal siphon, batch evaporator. Dilute Tank Farm liquid wastes are semi-continuously fed to the evaporator to maintain a constant level in the evaporator. A schematic of the NWCF ETS process is shown in Figure 1. The system consists of a feed tank (VES-NCC-152), a flash column (VES-NCC-150), a reboiler (HE-NCC-350), and a condenser (VES-NCC-151). Blended tank farm wastes are added to the flash column via the feed tank. When the level in the flash column reaches its normal operating level, steam is introduced into the shell side of the evaporator reboiler. As the evaporator solution temperature increases, its density decreases and the solution starts to rise. Steam bubbles form and further decrease the solution density. This draws the liquid from the bottom of the flash column into the tubes of the reboiler and creates a thermosiphon. The steam from the reboiler rises through a demister mesh and proceeds to the condenser. Typical NWCF ETS process operating conditions during sampling collection and analysis is shown in Table 1.

Once the desired specific gravity is reached, the concentrated solution is cooled and returned to the Tank Farm. The NWCF ETS overhead vapor is condensed in a total condenser and sent to the INTEC Process Equipment Waste Evaporator (PEWE) to be re-evaporated. Non condensable and purge gasses are vented from the feed tank and the condenser to the NWCF equipment vent system as shown in Figure 2. The equipment vent gasses join with the main process off-gas steam from the NWCF prior to the system high-efficiency particulate air (HEPA) filters.

Each batch generally requires 10-16 hours to process, followed by 10-16 hours to refill the feed tanks and to attend to waste transfers back to the Tanks Farm. Operating conditions that were monitored during emissions inventory testing are shown in discussed in Section 7. Normal operating conditions were maintained to provide the most stable and representative conditions throughout the sample collection period. All operating conditions are routinely recorded by the NWCF and Atmospheric Protection System (APS) control systems. These records are maintained by INTEC High Level Waste operations.

The offgas tie-in sample location used previously to sample the NWCF Calciner offgas stream was determined to be the best location for sample collection and offgas measurements for the scope and objectives of this project. The existing offgas tie-in location is downstream of the NWCF compressors and upstream of the APS. At this location, the offgas pipe is underground. The estimated offgas conditions at this location are listed in Table 1. Figure 3 shows the 12-inch ID pipe placement 9 ft underground, contained inside a larger 20 inch pipe encasement, which is inside a concrete encasement. The encasements provide the necessary physical protection and radiation shielding as the offgas flows to the APS.

Figure 4 shows a side view of the offgas tie-in location. This location is over 10 ft (10 pipe diameters) or more upstream and downstream of flow interference, so the flow should be reasonably straight (except for any disruption caused by the 12-inch tee). A 12-inch ID tee topped with a flange provides access through a manhole to the offgas pipe. Several penetrations (shown in top view in Figure 5) through the flange enable sample probe access and sample extraction.

The two-inch diameter port (line 2" POG-AR-156513) was used exclusively for the NWCF ETS offgas sample collection. This port is located at the centerline of the offgas duct cross section, allowing a vertical traverse of the duct to be made. A custom heated Method 5 probe (1.75 inch outside diameter) for was fabricated for sampling at this location. The sample probe was equipped with a compression fitting to provide a seal on the outer sheath of the sample probe. Pressurized air is used to continuously purge the annulus between the port inner wall and the probe sheath.

Table 1. Typical NWCF ETS operating conditions.

Parameter	DCS Identification Number	Value (a)
	HEPA filters	
Evaporator temperature	T150-1 through T150-10	95-110°C
Steam to evaporator	F350-1C	1500-2000 lbs/hr
Evaporator level	L150-1C	100-140 inches
Evaporator density		1.0-1.35 g/mL
Superheater (HE-NCC-335) outlet offgas temperature (HEPA filter bank inlet temperature)	T335-2C	150-205 °F
HEPA filter inlet pressure	P130-2C	30 to 100 in. H_2O
HEPA filter stage 1 differential pressure	PD130-1-1C, -2-1C, -3-1C, -4-1C	0.5-10 in. H_2O (when online) 0-0.5 in. H_2O (when offline)
Total differential pressure across HEPA filter stages 1-3	PD130-1C	2-18 in. H_2O
HEPA filter stage 3 outlet temperature	T130-1-1C, -2-1C, -3-1C, -4-1C	80-150 °F
NWCF process offgas flowrate (HEPA filter outlet offgas flowrate)	F130-1C	50 – 1,000 scfm
	Equipment Vent Conditions	
Offgas flow	F136-1C	500-1200 scfm
Offgas temperature	T336-1C	60°- 80° F
Offgas to APS pressure	P122-1	6-12 in. H_2O vacuum
Atmospheric Protection System (APS) and Other Equipment Downstream of the Offgas Tie-in Sample Location		
APS inlet offgas temperature (process offgas condenser outlet gas temperature	T-OGF-104	180-200°F
APS inlet flowrate (process offgas flow)	F-OGF-2	1000-2000 scfm
APS inlet offgas pressure	P-OGF-22	Negative 5-15 in. H_2O (c)
Main stack offgas flowrate	F-OGF-4/5	80,000-100,000 scfm
Main stack offgas temperature	T-OGF-4-1, -5-1	70-100 °F

a) If the value for an operating parameter drifts outside of he indicated value range, or outside +/- 10% of the range is shown, then the test team leader must determine if sample collection should discontinue until NWCF operation is modified to correct the value.

b) Standard temperature and pressure is 60°F, 1 atmosphere.

c) This pressure is controlled using dampers on offgas blowers BLO-OGS-213 and –214, and can be adjusted to control the static pressure at the Offgas Tie-in location

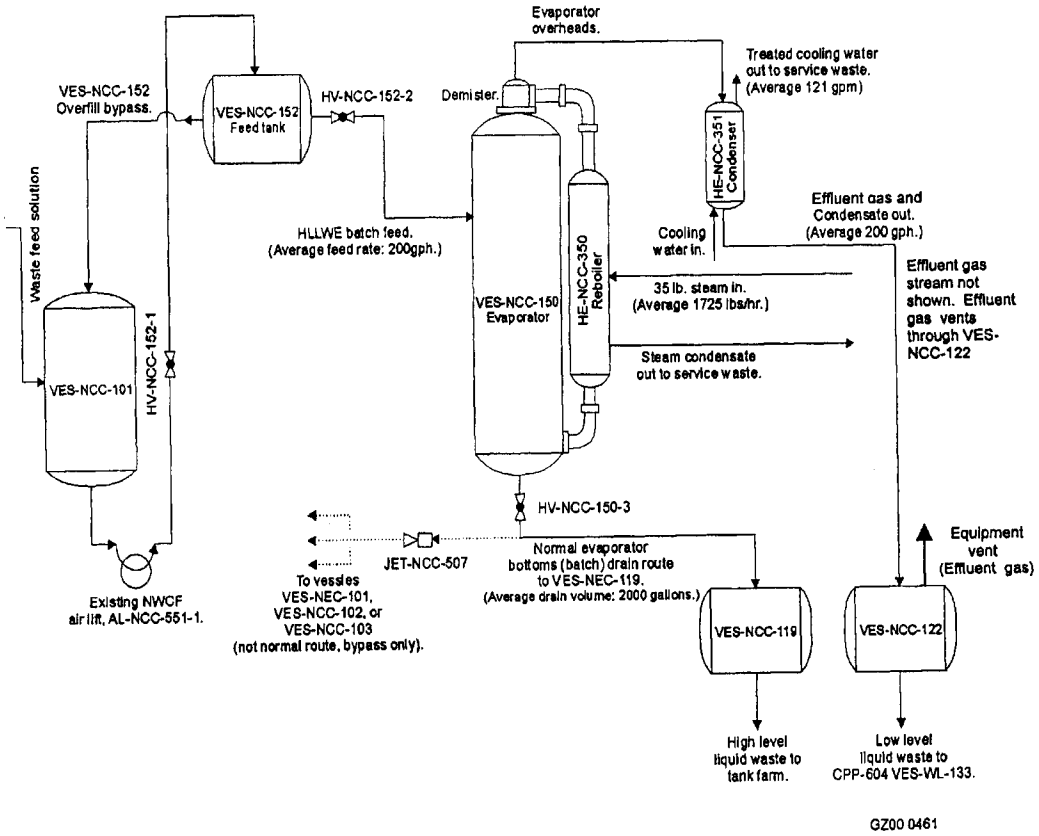

Figure 1. NWCF ETS system.

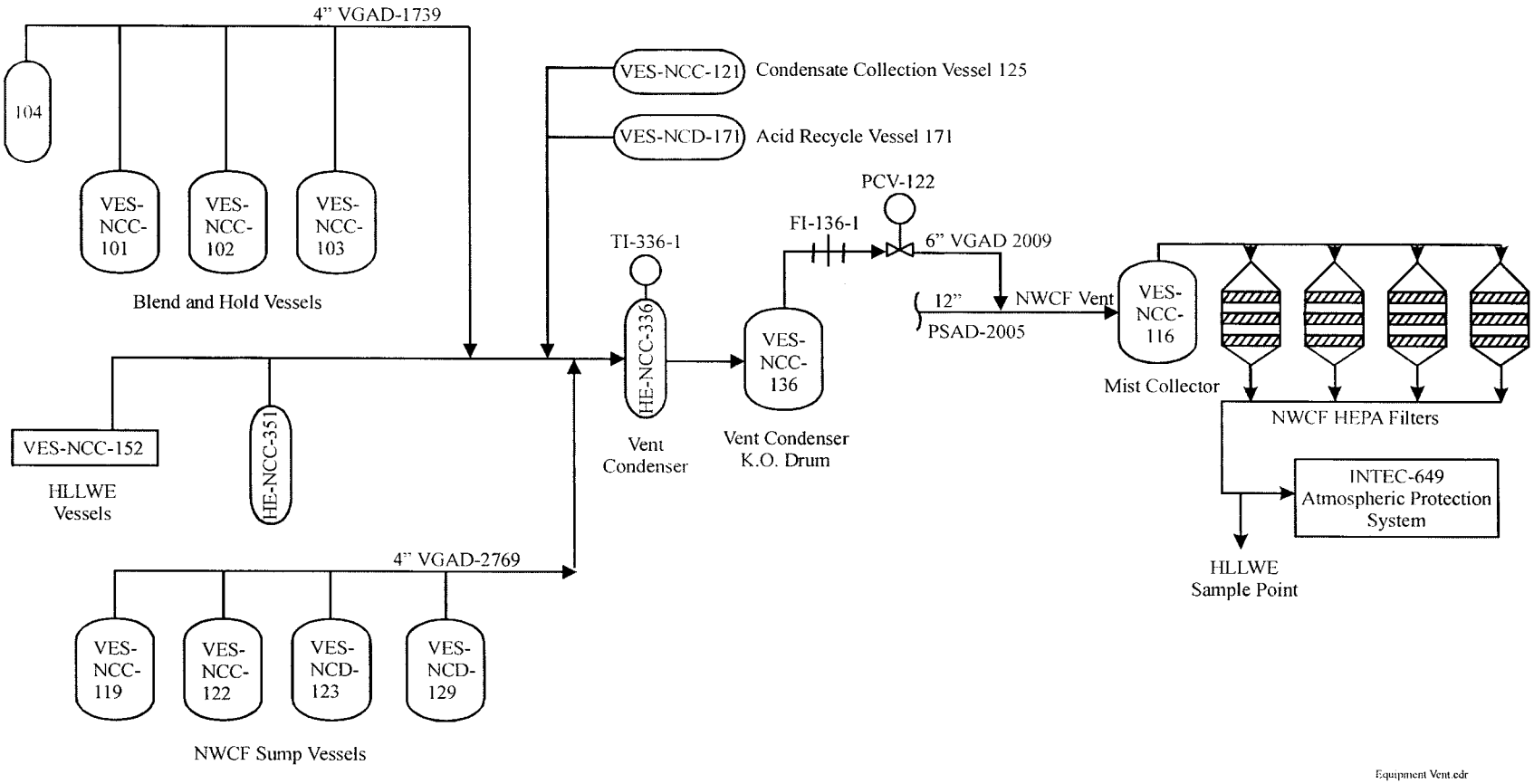

Figure 2. NWCF equipment vent.

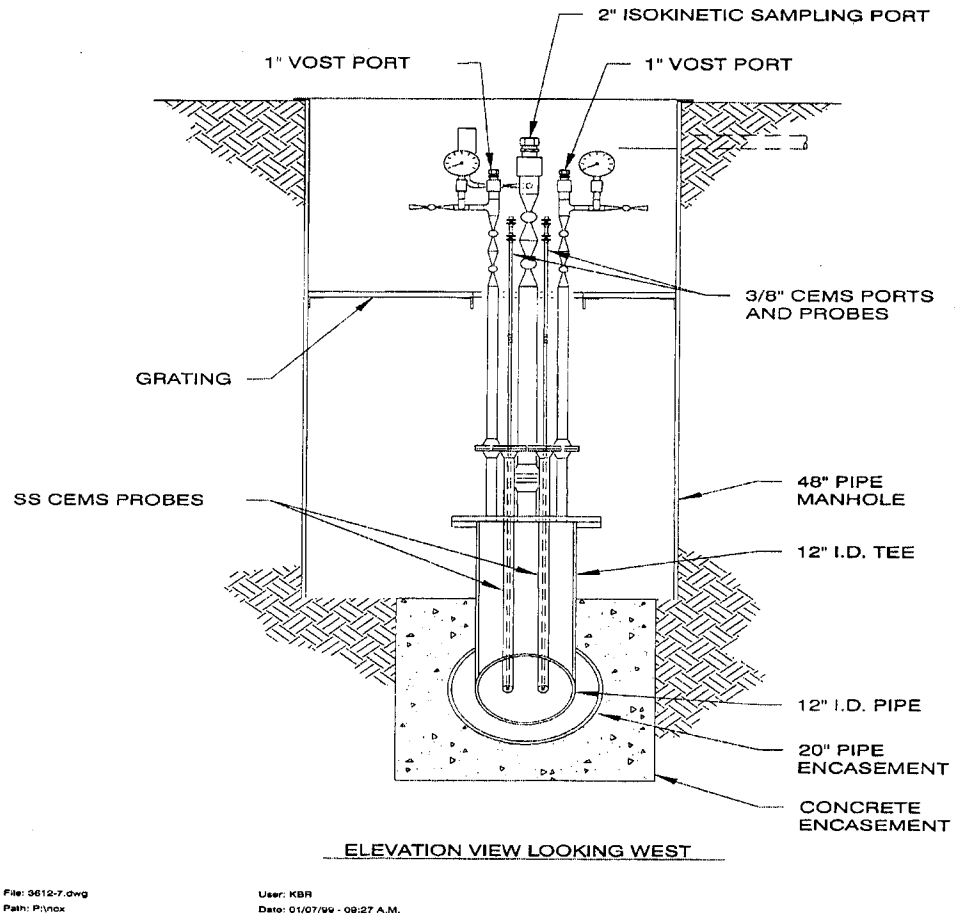

Figure 3. Offgas pipe axial view of the offgas tie-in sample location.

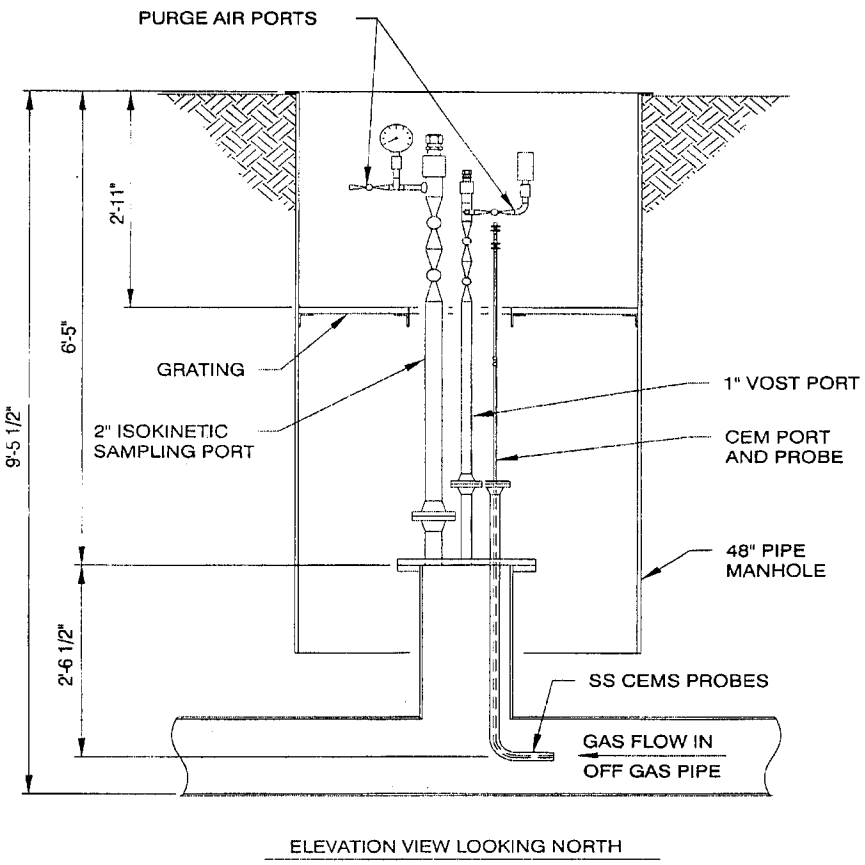

Figure 4. Side view of offgas tie-in sample location.

This sample collection location does not meet all specified EPA requirements for offgas sample collection (40 Code of Federal Regulations (CFR) 60 Appendix A, Methods 1 and 2) since it is not possible to traverse the duct at two orthogonal positions. There may also be some mutual disturbance of the offgas flow pattern caused by the 3/8-inch tubes that are slightly upstream of the 2-inch access port as shown in a top view of the sample tie in (Figure 5). Fortunately, interference between sample ports is minimized as there is a clear path to oncoming gas flow as shown in the cross sectional view.

Another possible limitation to the sampling location is the presence of radionuclide contamination in the NWCF offgas duct. The procedure for inserting the 12 ft probe into the duct required donning of anti-contamination clothing and active monitoring by a Radiological Control Technician and Industrial Hygienist. The fragile probe tip can be easily damaged, and possibly could fall into the NWCF offgas duct- an event that is undesirable because it would introduction foreign material into the duct upstream of the Atmospheric Protect System. In addition, any potential presence of loose contamination in the duct could result in the spread of radiological contamination and possible exposure to the sample collection attendants. Hence, it was determined that the probe would be placed in the duct at a fixed point and not disturbed until the NWCF ETS offgas measurements were concluded. The probe was only articulated at the beginning of the sample collection tests in order to measure the vertical velocity profile in the duct.

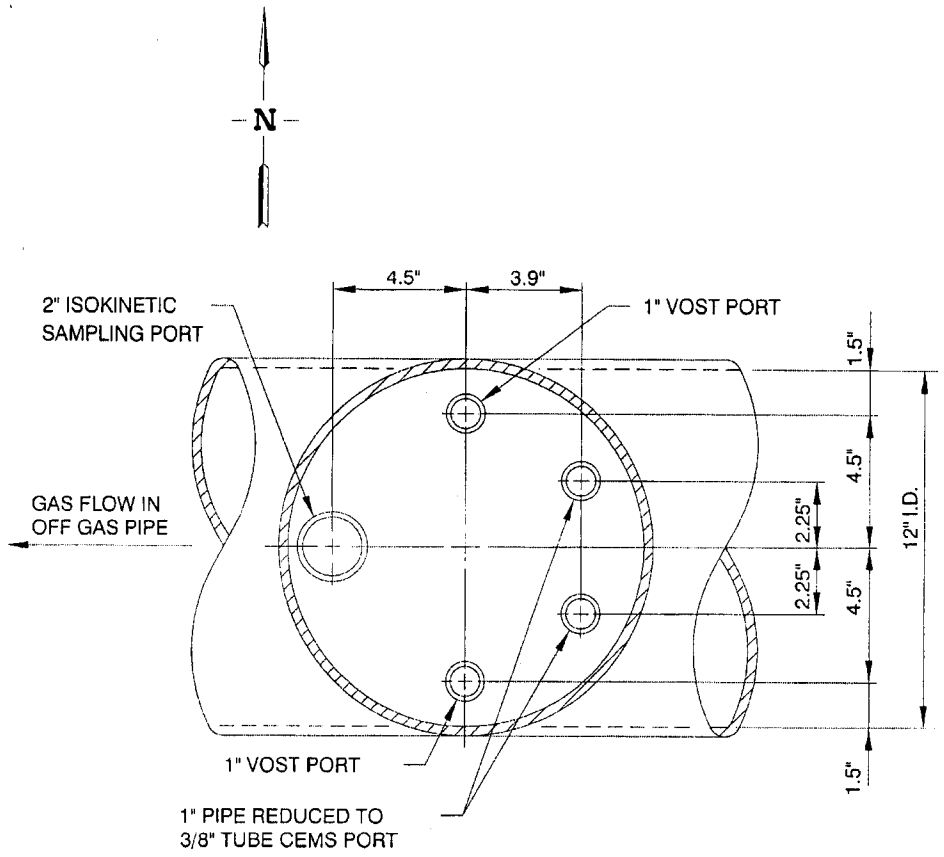

TOP VIEW OF SAMPLING TEE AT NWCF OFF-GAS TIE IN LOCATION

File: 3612-5.dwg
Path: P:\nox

User: KBR
Date: 01/07/99 - 09:26 A.M.

Figure 5. Top view of offgas tie-in sample location.

3. SCOPE AND APPROACH

The purpose of this activity is to characterize the NWCF ETS process effluent gas emissions. The Tank Farm wastes are highly acidic (mainly nitric acid) inorganic salt solutions and contain several RCRA metals, including mercury, and trace amounts of volatile and semi-volatile hazardous organic compounds. Those components with low boiling points are released to the NWCF ETS offgas system during waste transfers, mixing, and evaporation. Trace amounts of heavy, nonvolatile hydrocarbons may also exist in the waste feed solutions; however, emissions of the nonvolatile hydrocarbons and also the nonvolatile metals is theorized to mainly occur by aerosol entrainment from the evaporator. The majority of the entrained droplets are believed to be collected in the offgas condensers, mist eliminators, and HEPA filters.

The scope of the NWCF ETS process effluent gas emissions inventory includes:

- Measurement of the NWCF offgas duct velocity, temperature, and flowrate during operation of the NWCF ETS
- Manual offgas sampling and analysis for particulate matter (PM), hydrochloric acid (HCl), Cl_2, selected metals including Hg, volatile organic compounds (VOCs), and semi-volatile organic compounds (SVOCs)
- Measurement of radiological contaminate concentrations in sampling media using sample collection trains that are representative of the EPA sample collection trains
- Measurement of oxygen concentrations
- Measurement of probe rinseate for apportionment of metals and PM adsorbed on the probe to the respective train totals

Standard EPA sample collection and analysis methods were used to characterize the measure target analytes for each of the categories listed in Table 2. Measurements of moisture content and offgas temperature, velocity, and flowrate are included in each of the isokinetic sample train measurements. Sampling was conducted following EPA methodology with attention being given to the following:

- Development and adherence to a project quality assurance/quality control plan
- Implementation of sample chain-of-custody/requests-for-analysis, master sample lists, and sample labeling and tracking which assured in-field verifications of correctness of sample identifiers
- Development of target analyte lists (TAL) and precision, accuracy, representativeness, completeness, and comparability (PARCC) data quality indicators and objectives
- Collection of samples using checklists to record train set up, sample collection data, and sample recovery steps
- Collection and analysis of reagent blanks, trip blanks, and field blanks to assess prescribed data quality objectives
- Sample collection and documentation by a Project Quality Assurance Officer (PQAO)

- Application of EPA Solid Waste (SW)-846 and 40CFR 60 Appendix A reference methods for sample analysis
- Multiple reviews and verifications of field data, analytical data, process data, and resulting calculations of emissions rates

Table 2. Summary of NWCF ETS offgas sample collection and analysis methods.

Sample train procedure or Method	Measurement	Train description	Analytical procedures
2	Gas velocity, temp., swirl angle	S-type pitot, incline manometer, thermocouple	---
0010	SVOCs	Isokinetic single-point, glass-lined probe, heated filter, XAD-2® sorbent, impingers	3542/8270C GC/MS (SVOCs) STL SOP KNOX-ID-0012
0060	Multiple metals including Hg	Isokinetic single-point, glass-lined probe, heated filter, impingers that contain sorbent solutions	6010A (ICAP) for multiple metals, 7470 (CVAAS) for mercury
0050 modified for PM	HCl, Cl_2, PM		9056 / 9057 (IC for HCl, Cl_2, and F); and Method 5 (gravimetric for PM), STL SOP KNOX-MS-0011
0031 SMVOC	VOCs	Single point, non-isokinetic, three sorbent tubes in series – (Tenax®/Tenax® /Anasorb® 747) and condensate trap	5041A/8260 GC/MS
3A or other (as requested by project lead)	O_2	Single point, nonisokinetic, heated sample line	Paramagnetism

The level of organics in the acidic Tank Farm waste solutions is very low and the NWCT ETS is operated at a much lower temperature than the NWCF Calciner. Therefore, because temperature and chemical precursors are not there in the system, it was determined that separate analysis of PCBs, and D/Fs was not necessary. It was determined that the results of the SVOCs for the target PAH compounds would be sufficient for risk assessment calculations. The offgas results presented in this report demonstrate that SVOC emissions are indeed negligible, as are precursors to PAHs and also higher

molecular weight compounds, including PAHs, PCBs, and D/Fs. Hence, the scope of the NWCF ETS offgas emissions inventory was limited to those methods shown in Table 2.

During the recent NWCF Calciner offgas emissions inventory (Boardman 2001), sample collection runs were conducted for analysis of 24 of the highly toxic semi-volatile polynuclear aromatic hydrocarbons (PAH), polychlorinated biphenyl compounds (PCB) and dioxins and furans (D/Fs), as well as SVOCs. This required separate runs with EPA Method 0010 and EPA Method 0023A trains. The samples are extracted and concentrated for subsequent analysis by high resolution gas chromatography/high resolution mass spectroscopy (HRGC/HRMS). Isotope dilution is used for each target analyte; thus, it was possible to achieve method detection limit concentrations for those analytes that were typically one-three orders of magnitude less than MDLS for the current reported project, where standard EPA Method 8270C gas chromatography/mass spectrometry (GC/MS) was specified. Lower detection limits for these compounds were desired to assist in the analysis of the Calciner performance, and also to provide the best possible data for Calciner emissions health risk assessment.

At the beginning of the sample collection period, the vertical gas velocity profile and swirl angle in the duct was measured to determine an appropriate fixed-point location to collect the offgas samples. Fixed-point sampling was necessary to avoid potential spread of contamination and possible damage to the glass probe tip. Two separate traverses were made to enhance accuracy of the velocity measurements. The minimum number of traverse points per Method 1 on the single (vertical) traverse for particulate and nonparticulate traverses (4) plus the pipe centerline were included in the traverses. The swirl angle at each traverse point and the average swirl angle per EPA Method 1, Section 2.4 were also determined. Subsequently, the probe was fixed at the point of maximum flow which corresponds EPA prescribed sample position at four inches from the pipe wall.

A set of two samples trains (referred to herein as "runs") were collected for each category of pollutants at the beginning and also at the end of evaporator runs. This provided a total of four runs for each method and brackets the emissions over the entire batch. One blank train (field blank) was also collected during the period that the four trains for each method were being run. Trip blanks and reagent blanks also were collected, as required by the QAPjP.

Oxygen concentrations were periodically recorded from the digital readout of the oxygen monitor located in the sampling tent during the manual sample collection operations. Because the off-gas sampled was essentially air supplied to ventilate NWCF vessels it was supposed and confirmed that the oxygen concentrations in the duct were similar to ambient air conditions. Therefore, it was determined that there was no need to constantly operate the oxygen monitor.

Moisture levels in the offgas were determined from the gravimetric and volumetric changes in the sample train resins and impingers, respectively. The moisture level was typically less than the dew point of the sample gas passing through the sample collection train condensers. At the most, only 1-2 mL of condensate was collected in any of the condensate knockout impingers. This is consistant with the use of a total condenser on the process and the addition of dry instrument air.

Finally, sample contamination survey trains were collected at the beginning of the tests in accordance with an INTEC management control procedure (MCP-1173, Package and Ship NWCF Offgas Emissions Samples Offsite for Analysis, Revision 2). Radioanlytical results from these trains were used to bracket the expected radioactivity range in the offgas samples to ensure that sample shipments to STL were in accordance with their radioactive materials license. Additional screening was performed routinely throughout the sample collection period. Every sample, as a minimum, was screened for gamma/beta emissions using a micro-R radiation detector, which is approximately 10 times more sensitive than the hand-held friskers used in the field by the Radiological Control Technicians. All of the

Method 5 filters were also submitted to the INTEC Radiochemical Laboratory for an extended duration (typically 12 hours) gamma count.

At the end of the sample collection period, the sample probe was removed from the duct and rinsed with acetone and nitric acid. These samples were surveyed for radiological contamination before being shipped to the analytical laboratory for measurement of PM and metals that were adsorbed on the probe. The results of these samples were used to address the technical acceptability of leaving the probe at a fixed position. It was assumed that the level of particulate in the duct would be negligible as a result of the sample location being downsteam of the NWCF HEPA filter banks. This was shown to be an appropriate assumption for the NWCF Calciner offgas emissions inventory project (Boardman 2001) and for the NWCF ETS as discussed later in this report. When a measurement of any target analyte in the probe rinsate was greater than the method detection limits, the result was apportioned to the metals and PM trains results.

Table 3 summarizes the sample collection trains, blank trains (field blanks), trip and reagent blanks, probe rinses, and radiological survey trains. Also listed is the sample collection date, time, and volume of offgas that was pulled through the train.

Table 3. Summary of samples collected in support of the INEEL NWCF ETS Effluent Gas.

Train ID or QC Sample No.	STL Sample No.'s Associated with this train	Target Analytes	Date Collected	Run Start Time	Run End Time	NWCF ETS Batch Num.	Reboiler Steam On Time	Reboiler Steam Off Time
SCS-EVAP-1	3269, 3270, 3271, 3272	Tritium, alpha/beta/gamma emitters	05/30/01	1030	1610	309	1026	1937
SCS-EVAP-2	3273, 3274, 3276, 3278	Tritium, alpha/beta/gamma emitters	05/31/01	0830	1240	310	0830	1747
0060-STRT-1	3279, 3280, 3281, 3282, 3283, 3284	Metals, including Hg	06/05/01	0930	1230	316	0951	1933
0060-STRT-2	3291, 3292, 3293, 3294, 3295, 3296,	Metals, including Hg	06/06/01	0751	1133	317	813	1715
0060[a] Reagent Blanks	3297, 3298, 3299, 3300, 3301, 3348	Metals, including Hg	06/06/01	NA	NA	NA	NA	NA
0060-BT-1[b] Blank Train	3302, 3303, 3304, 3305, 3306, 3307	Metals, including Hg	06/06/01	NA	NA	NA	NA	NA
0060-END-1	3326, 2227, 3328, 3329, 3330, 3331	Metals, including Hg	06/05/01	1600	1930	316	0951	1933
0060-END-2	3332, 3333, 3334, 3335, 3336, 3337	Metals, including Hg	06/06/01	1500	1802	317	0813	1715
Nitric Probe Rinse	334	Metals, including Hg	06/06/01	NA	NA	NA	NA	NA
0050-STRT-1	3308, 3309, 3310, 3311	PM, HCl, Cl_2, HF, nitrate, nitrite	06/07/01	0800	1100	318	0800	1800

Table 3. Summary of samples collected in support of the INEEL NWCF ETS Effluent Gas.

Train ID or QC Sample No.	STL Sample No.'s Associated with this train	Target Analytes	Date Collected	Run Start Time	Run End Time	NWCF ETS Batch Num.	Reboiler Steam On Time	Reboiler Steam Off Time
0050-STRT-2	3312, 3313, 3314, 3315	PM, HCl, Cl_2, HF, nitrate, nitrite	06/11/01	0750	1130	322	0821	1828
0050[a] Reagent Blanks	3316, 3317, 3318, 3319, 3349	PM, HCl, Cl_2, HF, nitrate, nitrite	06/07/01	NA	NA	NA	NA	NA
0050-BT-1[b]	3322, 3323, 3324, 3325	PM, HCl, Cl_2, HF, nitrate, nitrite	06/11/01	NA	NA	NA	NA	NA
0050-END-1	3338, 3339, 3340, 3341	PM, HCl, Cl_2, HF, nitrate, nitrite	06/07/01	1405	1720	318	0800	1800
0050-END-2	3342, 3343, 3344, 3345	PM, HCl, Cl_2, HF, nitrate, nitrite	06/11/01	1430	1730	322	0821	1828
Acetone probe rinse	3346	PM	06/11/01	NA	NA	NA	NA	NA
0010-STRT-1	3353, 3354, 3355, 3356, 3357, 3358	Semi-volatile organic compounds	06/18/01	0830	1130	329	0857	1819
0010-STRT-2	3372, 3373, 3374, 3375, 3376, 3377	Semi-volatile organic compounds	06/19/01	0830	1100	330	0824	1748
0010[a] Reagent Blank	3378, 3343, 3444, 3445	Semi-volatile organic compounds	06/18/01	NA	NA	NA	NA	NA
0010-BT-1[b]	3397, 3398, 3399, 3400, 3401, 3402	Semi-volatile organic compounds	06/18/01	NA	NA	NA	NA	NA

Table 3. Summary of samples collected in support of the INEEL NWCF ETS Effluent Gas.

Train ID or QC Sample No.	STL Sample No.'s Associated with this train	Target Analytes	Date Collected	Run Start Time	Run End Time	NWCF ETS Batch Num.	Reboiler Steam On Time	Reboiler Steam Off Time
0010-END-1	3403, 3404, 3405, 3406, 3407, 3408	Semi-volatile organic compounds	06/18/01	1500	1800	329	0857	1819
0010-END-2	3422, 3423, 3424, 3425, 3426, 3427	Semi-volatile organic compounds	6/19/01	1400	1715	330	0824	1748
0031-STRT-1	3359, 3360, 3361, 3362, 3363, 3364, 3365, 3366, 3367, 3368, 3369, 3370, 3371	Volatile organic compounds	06/20/01	0810	1048	331	0831	1748
0031-STRT-2	3379, 3380, 3381, 3382, 3383, 3384, 3385, 3386, 3387, 3388, 3389, 3390, 3391	Volatile organic compounds	06/21/01	0815	1152	332	0838	1749
0031 Field and Trip Blanks[a,b]	3392, 3393, 3394, 3395, 3396, 3441, 3442,	Volatile organic compounds	06/20/01	NA	NA	NA	NA	NA
0031-END-1	3409, 3410, 3411, 3412, 3413, 3414, 3415, 3416, 3417, 3418, 3419, 3420, 3421	Volatile organic compounds	06/20/01	1400	1715	331	0831	1748
0031-END-2	3428, 3429, 3430, 3431, 3432, 3433, 3434, 3435, 3436, 3437, 3438, 3439, 3440	Volatile organic compounds	06/21/01	1350	1710	332	0838	1749

a) Reagent blanks and trip blanks were obtained as identified in the master sample collection list.

b) Field QC samples are not exposed to the actual process offgas and thus are not correlated to ETS batches or run times. Probe rinses are not collected during active flow in the sampling slipstream, therefore, these are also not correlated to ETS batches or run times

4. RADIOLOGICAL SCREENING RESULTS

Two radiological contamination survey trains were collected at the beginning of the NWCF ETS offgas emissions inventory to establish the level of radiological contamination that could be uptaken by the EPA sample collection trains. The first train, identified as SCS-EVAP-1, was a hybrid of the Method 0060 for metals and Method 0050 for anions. The configuration of this train included a particle filter, followed by a condenser and condensate collection impinger, and then a pair of nitric acid/hydrogen peroxide impingers from the Method 0060 and a pair of sodium hydroxide impingers from the Method 0050 train. The acid and hydroxide impingers were used to capture the particulate and volatile radionuclides that are not disengaged by the filter and condensate trap. A gas volume of 3 dscm (dry, standard cubic meters) of gas was collected to match the volume of gas that was collected by the Method 0060 and 0050 sampling runs. Less than 2 mL of condensate was collected by this train- an insufficient amount for accurate analysis. Therefore, the condensate was added to the nitric/peroxide impinger solution.

The second radiological contamination train, identified as SCS-EVAP-2, was simply a standard Method 0010 train for semi-volatile organic collection, consisting of a particle filter, condenser, XAD-2® resin tube, a condensate trap and two organic-free water impingers. This train was mainly used to establish the level of contamination that could be potentially captured by the XAD-2® resin tube. The sample line, train glassware and filter housing were rinsed with acetone and methylene chloride. These rinses were composited into single sample for radiochemical analysis. The volume of gas collected was 3 dscm. The amount of condensate collected by the train was also very low (approximately 2 mL) for this train, indicating the offgas was essentially dry. The small amount of condensate was added to the organic-free impingers. Following the 12-hr gamma scan of the XAD-2® resin, the upper section of the resin bed, which first contract the sample gas and condensate, was extracted and prepped for gross alpha/gross beta counting.

Method 0031 for VOCs collection requires only 20 dsL (dry, standard liters) total, and only 5 dsL for each set of tubes. Therefore, the contamination levels established by the reference survey trains, at a total volume of 3000 dsL, clearly bounded the potential contamination picked up on the Tenax® resin tubes used in the Sampling Method for Volatile Organic Compounds (SMVOC) runs.

Analysis of the contamination survey train samples was completed by the INTEC Radiochemical Laboratory. Appropriate standards were prepared and used to provide quantitative results for the various sample collection media. Each sample was first analyzed by a non-intrusive gamma scan to measure gamma-emitting nuclides such as Ba^{137} (which is the short lived daughter product of Cs^{137}). Since Cs^{137} is the most abundant non-volatile radionuclide in the waste, it is a convenient marker for the non-volatile radionuclides that could be present in the offgas samples, including Sr^{90} and actinide isotopes. Therefore, an accurate gamma scan provides a basis for identifying the potential presence of Ba^{137}, and hence Cs^{137}, Sr^{90}, and other fission products and actinides that may be present in the samples. A 12-hr gamma scan was performed to provide the most accurate analysis possible.

Following the gamma scan, the samples were prepared for gross alpha/gross beta counting. This required that the solid sample media be digested and then dried to obtain a valid measure of the particle emissions. The activity of tritium was determined by beta scintillation of an aliquot of the up-front liquid impinger contents to which the small amount of condensate was added. These fraction also absorb the largest percentage of the non-condensable water vapor.

Table 4 summarizes the radio-assay results for SCS-EVAP-1 and SCS-EVAP-1. Only an ultra low level of gross beta and gross alpha emissions was detected in the samples. The sample contamination

levels are conservatively less than the analytical laboratory sample screening acceptance criteria for Category I samples.

Table 4. Sample contamination survey train radio-assay results.

Train ID	Sample ID	Sample Media	Gamma	Gross Beta	Gross Alpha	Tritium
SCS-EVAP-1	3269	Particle filter	No nuclides identified	5.7E+00 ± 1.4E+00 pCi	9.8E-01 ± 6.7E-01 pCi	NA (dry sample)
	3270/3271 composite	Condensate and nitric/peroxide impinger contents	No nuclides identified	4.0E-02 ± 2.1E-02 pCi/mL	Not detected	0.17 µCi/sample
	3272	Hydrogen peroxide impinger contents	No nuclides identified	4.3E+00 ± 2.1E-01 pCi/mL	3.4E-02 ± 4.0E-02 pCi/mL	NA (negligible condensate in sample)
SCS-EVAP-2	3273	Particle filter	No nuclides identified	1.85E+01 ± 4.0E+00 pCi	6.0E+00 ± 2.6E+00 pCi	NA (dry sample)
	3276	XAD-2® resin tube	No nuclides identified	5.84E00 ± 7.2E-01 pCi/g	Not detected	NA (negligible condensate in sample)
	3278	Condensate and organic-free water impinger composite	No nuclides identified	1.6E-02 ± 1.9E-02 pCi/mL	Not detected	0.32 µCi/sample
	3274	Organic solvent rinse composite	No nuclides identified	Not detected	Not detected	NA (negligible condensate in sample)

In order to ensure that the extremely low contamination levels in the offgas stream remained constant throughout the sample collection inventory, the particle filter for each Method 0060, Method 0050, and Method 0010 run, and one of the leading Tenax® tubes was submitted for a 12-hour gamma scan. This had little or no effect on sample preservation condition of the filters. Although the Tenax® was not maintained at the required temperature of 4°C, it is not likely that the VOC analysis results were

adversely affected since the tube was kept sealed during the gamma scan. The results of the on-going screening were consistent with the baseline results. No nuclides were identified by these extended gamma-scan analyses.

Each sample was also "smear-wiped" and counted to verify there was no detectable fugitive contamination on the surface of the sample containers. These additional screening efforts corroborated the results of the sample contamination survey trains and verified that each train did not collect any significant contamination throughout the 3-week sample collection period.

Finally, the volume of offgas sampled, as well as the amount of condensate collected by all of the sample runs, was checked and compared to the sample contamination survey trains. This ensured that the level of condensate, and hence the estimated amount of tritium in the respective samples, was consistent with the baseline results.

5. OFFGAS SAMPLE ANALYTICAL RESULTS

SAIC was responsible for setting-up, operating, and recovering the sample collection trains in the contamination containment hood. Once the samples were obtained, custody was transferred to the BBWI project principals for radiological screening and shipment to STL. The inorganic samples produced by each run were shipped to STL in Department of Transportation (DOT) approved fiber boxes with metal inner canisters. The organic samples were placed on ice and packaged in expanded, insulated coolers in order to maintain temperature preservation requirements. Chain-of-Custody and Requests-for-Analysis forms were used to track each sample. Shipments requiring preservative cooling were made using overnight delivery in order to ensure temperature preservation and analysis time limits were met. All of the samples meet the preservation and sample analysis time requirements without exception.

The results presented in this section are extracted from the Final Analytical Report provided by STL (STL 2001). Excerpts of the text and tables are included in this report to provide a single project summary document. Appendix A is a listing of the analytical lab certificates of analysis. These data were used to calculate the offgas emissions rates presented in Section 9.

STL tabulated train totals for each of the four EPA train runs that were made to characterize the NWCF ETS effluent gas emissions that are discharged through the NWCF offgas system. The results for each train component were summed to provide a run total for each target analyte. Although the laboratory data were reported down to the method detection limit (MDL), the project has implemented the reliable detection level (RDL) as the minimum value for risk calculations. The "RDL" is the detection level recommended by EPA. It is defined as 2.623 times the MDL (2.623 X MDL).

Significant figures for both the constituent fractions and the cumulative total were determined according to ASTM Standard E29-93a (1999), "Standard Practice for Using Significant Digits in Test Data to Determine Conformance with Specifications". Laboratory-assigned data qualifiers are displayed with each target analyte when required. The majority of these method-based flags are standardly defined flags among environmental laboratories. The data flags attached to the train totals represent the cumulative set of flags assigned to the result for each component that is included as part of the respective train totals. Data flags for individual component sample fractions were only carried through to the train totals when that particular train component result had an observable mathematical impact (based on significant figures as cited above) on the value of the "train totals" result for that compound.

When assigned, the "less than" (<) sign indicates that at least one sample fraction result included in the run total is either a "non-detect" value that has been evaluated down to the MDL of the measurement, or an estimated "hit" value that is below the RDL. In either case, the final analyte value for any fraction that has a laboratory result below the RDL is raised to the default RDL value, and the actual value for the respective analyte is judged to be less than conservative reported value. This same logic carries through to the summation of train fractions to arrive at train totals.

Additional project-specific train total flags are applied to the run total values that are not standard EPA data flags. These project-specific flags are specific to the NWCF ETS Offgas Emissions Inventory project and are defined as follows:

- An "N" flag indicates that the compound was not measured (detected) in any of the sampling train components, or fractions.

- A "P" flag indicates that the compound was measured (detected) in one or more of the train components, or fractions, but not in all of the sampling train fractions.

- An "A" flag indicates that the compound was measured (detected) in all of the sampling train components, or fractions.

5.1 Volatile Organic Compounds

The standard U.S. EPA Method 0031 SMVOC sampling train configuration was used to collect samples of the NWCF ETS offgas for the assessment of volatile compounds. Each run used four sets of volatile organic adsorption resins tubes. Each set of tubes was comprised of two Tenax® tubes and one Anasorb 747® tube in series. The resin tubes were followed by a condensate trap that was used to capture the condensate captured by all four set of tube for a given run. The volume of offgas collected across each set of tubes was 5 L over a time period of approximately 30-40 minutes. Hence the total volume of gas for each run was approximately 20 L, collected over a time span of around 2.5 hours. The purpose of multiple tube sets was to integrate the sampling event over a period of time to better obtain representative data that characterizes the offgas emissions of the offgas stream sampled and is recommended by Method 0031. Each run produced 12 resin tubes and one condensate fraction that were stored on ice after they were removed from the train.

5.1.1 VOC Target Analyte List

The SMVOC samples were analyzed for the volatile organic compound target analytes given in Table 5. Analyses of SMVOC samples were completed using thermal desorption of the tubes onto a purge-and-trap device. SW-846 Method 5041B was implemented to carry out the thermal desorption. Method 8260B was implemented to analyze the desorbed analytes using GC/MS. The two SMVOC Tenax® tubes from a sample set were analyzed together, while the Anasorb 747® tube was separately analyzed.

A GC/MS library search was performed on each SMVOC sample (including the condensate samples) for non-target analytes, or tentatively identified compounds (TICs). The search was performed for the thirty (30) largest identifiable non-target compounds having a response that was at least 10% of the response of the nearest internal standard, which was spiked at 0.25 μg. The library search was conducted against the National Bureau of Standards library of mass spectral data containing an estimated 75,000 compounds. The matching criteria includes a nominal 85% match of the mass spectral features, and analyst discretion of all identities reported.

Table 5. Volatile organic compound target analyte list.

VOC Target Analyte	CAS Registry Number
Acetone	67-64-1
Acrylonitrile	107-13-1
Benzene	71-43-2
Bromobenzene	108-86-1
Bromochloromethane	74-97-5
Bromodichloromethane	75-27-4
Bromoform	75-25-2
Bromomethane	74-83-9
2-Butanone	78-93-3
n-Butylbenzene	104-51-8
sec-Butylbenzene	135-98-8
tert-Butylbenzene	98-06-6
Carbon disulfide	75-15-0
Carbon tetrachloride	56-23-5
Chlorobenzene	108-90-7
Chlorodibromomethane	124-48-1
Chloroethane	75-00-3
Chloroform	67-66-3
Chloromethane	74-87-3
2-Chlorotoluene	95-49-8
4-Chlorotoluene	106-43-4
1,2-Dibromo-3-chloropropane	96-12-8
1,2-Dibromoethane	106-93-4
Dibromomethane	74-95-3
1,2-Dichlorobenzene	95-50-1
1,3-Dichlorobenzene	541-73-1
1,4-Dichlorobenzene	106-46-7
Dichlorodifluoromethane	75-71-8
1,1-Dichloroethane	75-34-3
1,2-Dichloroethane	107-06-2
1,1-Dichloroethene	75-35-4
cis-1,2-Dichloroethene	156-59-2
trans-1,2-Dichloroethene	156-60-5
1,2-Dichloropropane	78-87-5
1,3-Dichloropropane	142-28-9
2,2-Dichloropropane	594-20-7
1,1-Dichloropropene	563-58-6
cis-1,3-Dichloropropene	10061-01-5
trans-1,3-Dichloropropene	10061-02-6

Table 5. Volatile organic compound target analyte list.

VOC Target Analyte	CAS Registry Number
Ethylbenzene	100-41-4
Hexachlorobutadiene	87-68-3
2-Hexanone	591-78-6
Isopropylbenzene	98-82-8
p-Isopropyltoluene	99-87-6
Methylene chloride	75-09-2
4-Methyl-2-pentanone	108-10-1
Naphthalene	91-20-3
n-Propylbenzene	103-65-1
Styrene	100-42-5
1,1,1,2-Tetrachloroethane	630-20-6
1,1,2,2-Tetrachloroethane	79-34-5
Tetrachloroethene	127-18-4
Toluene	108-88-3
1,2,3-Trichlorobenzene	87-61-6
1,2,4-Trichlorobenzene	120-82-1
1,1,1-Trichloroethane	71-55-6
1,1,2-Trichloroethane	79-00-5
Trichloroethene	79-01-6
Trichlorofluoromethane	75-69-4
1,2,3-Trichloropropane	96-18-4
1,2,4-Trimethylbenzene	95-63-6
1,3,5-Trimethylbenzene	108-67-8
Vinyl chloride	75-01-4
m-Xylene & p-Xylene	136777-61-2
o-Xylene	95-47-6

5.1.2 VOC Analytical Results

Tabulated data summaries for the SMVOC data are given in Appendix A. These tables have been extracted from the STL Analytical Laboratory Final Report for this project. The run total (in total μg) for each analyte represents the sum of the amounts found in all of the SMVOC sets collected during each sampling run, including the amount of analyte found in the SMVOC condensate sample. The SMVOC condensate sample results were obtained by multiplying the observed concentration in mass/volume units (μg/L) by the final condensate volume (L) collected to obtain a result in units of mass (μg).

The Method 0031 SMVOC Tube Set Total (total μg/set) result consists of the sum of the analytical results for the two Tenax® resin tube contents (analyzed together) and the analytical result for the Anasorb 747® tube contents. The calculation is conducted as follows:

(Total μg on the Tenax® Tubes #1 and #2) + (Total μg on the Anasorb 747® Tube)

= Total μg on the Method 0031 SMVOC tube set

5.1.3 VOC Data Quality Assessment

The tubes were shipped to the analytical laboratory and analyzed within two week in accordance with EPA guidance and the QAPjP. The SMVOC samples were received at the laboratory in good condition. The samples were held on ice until the laboratory custodian checked the cooler temperatures and logged the samples at the laboratory.

All samples were processed through the analytical methods as planned, and analytical results were obtained for all of the expected analyses, with one exception. Low surrogate recoveries were obtained for sample A-3364 (The Anasorb 747® tube for Run 1, Set 2) and therefore the data for this sample are not usable. The results for all other samples meet the data quality objectives (DQOs) specified in the QAPjP and are therefore usable for the NWCF ETS offgas emissions inventory and risk assessment.

The toluene result for the Run 2, Set 2 Tenax®/Anasorb 747® tube appears to be an outlier. This particular result was over ten times higher than any other back-half result. Also, this result was over eight times higher than the corresponding front-half result. There were several other runs that exhibited higher toluene results for the back-half fraction than the front-half fraction. These results are not consistent with the results for other analytes, including benzene, which clearly did not break through the front-half SMVOC tubes. These inconsistent results imply that there was a source of fugitive contamination available to these tubes. Since the field and trip blanks did not generally exhibit toluene (only one front-half field blank and one back-half trip blank had "hits" for toluene), it appears that the sample tubes were exposed to environments containing some toluene that were not available to the field or trip blanks.

The methylene chloride results for Run 1, Set 1 and Set 2, were inconsistent with subsequent test runs. The methylene chloride result for Run 1, Set 1, was much higher than for any other analysis. The Run 1, Set 2 result was lower than the result for Run 1. The remaining results were lower in concentration, and appear to reside within three standard deviations of the mean value. Also, the acetone result for Run 1, Set 1, was the highest result for acetone that was found in any of the offgas samples. The cause of the high early results is assumed to be contamination of the sampling probe with acetone and methylene chloride. The SVOC train was used immediately prior to collection of the SMVOC samples. During this sampling event, the MM-5 probe (that was used for the SVOC train and had been rinsed with acetone and methylene chloride at the conclusion of SVOC sample collection) was used to collect the SMVOC samples. Since the same probe was rinsed with acetone and methylene chloride, it is likely that these solvents found in the offgas VOC samples originated in the equipment, not in the offgas.

The SMVOC runs results show a rapid decrease in methylene chloride in the second and third tube sets for the first run. This supports the supposition that the higher amounts of methylene chloride in the first run were an artifact of the field procedures. In spite of this supposition, the result was used when calculating the emissions health risk since the risk factor and emissions rate, although higher than actual emissions, does not impact the outcome of the cumulative emissions risk.

5.1.3.1 VOC Breakthrough Evaluation

The analysis scheme of the three-tube configuration of Method 0031 included individual analysis of each resin sample. The historical criterion for evaluating occurrences of SMVOC system breakthrough states that less than 30 percent by weight of an analyte should be detected on the back tube relative to the total amount observed on the front two tubes. That is, the Anasorb 747® resin tube should not contain more than 30 percent of the analyte total found on the front Tenax® resin samples. The criterion does not apply when less than 75 nanograms of an analyte are detected on the back trap. Additionally, the criterion does not apply when the analytes are the ultra-low boiling point analytes such as dichlorodifluoroethane, chloromethane, bromomethane, chloroethane, and vinyl chloride.

The SMVOC apparatus was operated under near optimum conditions during on-site sampling. The sample stream entered the first resin tube at a nominal 10°C as monitored by a thermocouple at the base of the condenser. A 20-liter sample was the maximum volume of gas pulled across the resin tubes, and the sampling rate was a standard SMVOC approach at approximately 0.50 liters per minute. Under these conditions the analytes were universally trapped on the Tenax® tubes except for the low boiling point analytes noted above. There are some anomalous results for acetone and toluene in which back-half fractions contained more than 30 percent of the front-half amount, and the total was more than 75 nanograms. These results appear to be derived from fugitive contamination sources, and do not represent breakthrough to the back half SMVOC tubes under these conditions. Acetone and toluene are solvents used during sampling for rinsing glassware and tubing. The reagent sources are assumed to be the source of the fugitive contamination.

5.1.3.2 VOC Blank Data Assessment

Several types of Method 0031 SMVOC blanks were evaluated during the offgas sampling analyses in order to assess the sampling and analytical environments for possible fugitive contamination sources. SMVOC field blanks were collected in order to assess the sampling train environments for possible fugitive contamination sources. Standard SMVOC trip blanks were also collected, as well as a deionized water trip blank. A comparison of the blank samples is shown in Table 6.

The SMVOC tube field blank results do not indicate field contamination by any target analytes except the three common laboratory contaminants, acetone, methylene chloride and toluene. The data for the SMVOC tube trip blanks also exhibit the presence of these three target analytes, in addition to bromomethane that was also observed on the Tenax® tubes, and dichlorodifluoromethane that was observed on the Anasorb 747® tube. The aqueous trip blank did not exhibit general contamination. The laboratory blanks associated with these samples also exhibit the presence of acetone and methylene chloride, but at levels too low to account for the observed levels of acetone in the trip blanks. Methylene chloride, acetone, and toluene are typically considered common laboratory contaminants during data validation. The laboratory method blank and field blank results do not, however, exhibit toluene.

Table 6. Comparison of SMVOC blank sample results.

Analyte	SMVOC Tenax Pair Field Blank 06/21/01[a] A-3392 (µg)		SMVOC Anasorb 747 Field Blank 06/21/01[a] A-3393 (µg)		SMVOC Tenax Pair Field Blank 06/21/01[a] A-3394 (µg)		SMVOC Anasorb 747 Field Blank 06/21/01[a] A-3395 (µg)		SMVOC Tenax Pair Trip Blank 06/20/01[a] A-3441 (µg)		SMVOC Anasorb 747 Trip Blank 06/20/01[a] A-3442 (µg)		SMVOC D.I. Water Trip Blank 06/22/01[a] A-3396 (µg/L)	
Acetone	**0.063**	**J,B**	**0.063**	**J,B**	**0.063**	**J,B**	**0.071**	**J,B**	**0.82**	**B**	**0.27**	**B**	1.2	U
Acrylonitrile	0.29	U	0.29	U	0.29	U	0.29	U	0.29	U	0.29	U	12	U
Benzene	0.017	U	0.017	U	0.017	U	0.017	U	0.017	U	0.017	U	0.63	U
Bromobenzene	0.010	U	0.010	U	0.010	U	0.010	U	0.010	U	0.010	U	0.84	U
Bromochloromethane	0.015	U	0.015	U	0.015	U	0.015	U	0.015	U	0.015	U	0.66	U
Bromodichloromethane	0.011	U	0.011	U	0.011	U	0.011	U	0.011	U	0.011	U	0.79	U
Bromoform	0.019	U	0.019	U	0.019	U	0.019	U	0.019	U	0.019	U	0.60	U
Bromomethane	0.015	U	0.015	U	0.015	U	0.015	U	**0.015**	**J**	0.015	U	0.47	U
2-Butanone	0.10	U	0.10	U	0.10	U	0.10	U	0.10	U	0.10	U	2.2	U
n-Butylbenzene	0.016	U	0.016	U	0.016	U	0.016	U	0.016	U	0.016	U	0.60	U
sec-Butylbenzene	0.0084	U	0.0084	U	0.0084	U	0.0084	U	0.0084	U	0.0084	U	0.39	U
tert-Butylbenzene	0.016	U	0.016	U	0.016	U	0.016	U	0.016	U	0.016	U	0.34	U
Carbon disulfide	0.018	U	0.018	U	0.018	U	0.018	U	0.018	U	0.018	U	0.26	U
Carbon tetrachloride	0.018	U	0.018	U	0.018	U	0.018	U	0.018	U	0.018	U	0.47	U
Chlorobenzene	0.0084	U	0.0084	U	0.0084	U	0.0084	U	0.0084	U	0.0084	U	0.63	U
Chlorodibromomethane	0.015	U	0.015	U	0.015	U	0.015	U	0.015	U	0.015	U	0.68	U
Chloroethane	0.018	U	0.018	U	0.018	U	0.018	U	0.018	U	0.018	U	0.34	U
Chloroform	0.018	U	0.018	U	0.018	U	0.018	U	0.018	U	0.018	U	0.73	U
Chloromethane	0.013	U	0.013	U	0.013	U	0.013	U	0.013	U	**0.022**	**J**	0.26	U
2-Chlorotoluene	0.0047	U	0.0047	U	0.0047	U	0.0047	U	0.0047	U	0.0047	U	0.50	U
4-Chlorotoluene	0.0047	U	0.0047	U	0.0047	U	0.0047	U	0.0047	U	0.0047	U	0.50	U
1,2-Dibromo-3-chloropropane	0.029	U	0.029	U	0.029	U	0.029	U	0.029	U	0.029	U	1.0	U
1,2-Dibromoethane	0.020	U	0.020	U	0.020	U	0.020	U	0.020	U	0.020	U	1.0	U
Dibromomethane	0.017	U	0.017	U	0.017	U	0.017	U	0.017	U	0.017	U	0.71	U
1,2-Dichlorobenzene	0.020	U	0.020	U	0.020	U	0.020	U	0.020	U	0.020	U	0.45	U
1,3-Dichlorobenzene	0.010	U	0.010	U	0.010	U	0.010	U	0.010	U	0.010	U	0.52	U
1,4-Dichlorobenzene	0.014	U	0.014	U	0.014	U	0.014	U	0.014	U	0.014	U	0.55	U
Dichlorodifluoromethane	0.013	U	0.013	U	0.013	U	0.013	U	0.013	U	**0.022**	**J**	0.26	U
1,1-Dichloroethane	0.017	U	0.017	U	0.017	U	0.017	U	0.017	U	0.017	U	0.39	U
1,2-Dichloroethane	0.017	U	0.017	U	0.017	U	0.017	U	0.017	U	0.017	U	0.47	U
1,1-Dichloroethene	0.018	U	0.018	U	0.018	U	0.018	U	0.018	U	0.018	U	0.37	U
cis-1,2-Dichloroethene	0.016	U	0.016	U	0.016	U	0.016	U	0.016	U	0.016	U	0.50	U
trans-1,2-Dichloroethene	0.019	U	0.019	U	0.019	U	0.019	U	0.019	U	0.019	U	0.31	U
1,2-Dichloropropane	0.013	U	0.013	U	0.013	U	0.013	U	0.013	U	0.013	U	0.55	U
1,3-Dichloropropane	0.019	U	0.019	U	0.019	U	0.019	U	0.019	U	0.019	U	0.52	U

Table 6. Comparison of SMVOC blank sample results.

Analyte	SMVOC Tenax Pair Field Blank 06/21/01[a] A-3392 (µg)		SMVOC Anasorb 747 Field Blank 06/21/01[a] A-3393 (µg)		SMVOC Tenax Pair Field Blank 06/21/01[a] A-3394 (µg)		SMVOC Anasorb 747 Field Blank 06/21/01[a] A-3395 (µg)		SMVOC Tenax Pair Trip Blank 06/20/01[a] A-3441 (µg)		SMVOC Anasorb 747 Trip Blank 06/20/01[a] A-3442 (µg)		SMVOC D.I. Water Trip Blank 06/22/01[a] A-3396 (µg/L)	
2,2-Dichloropropane	0.018	U	0.018	U	0.018	U	0.018	U	0.018	U	0.018	U	0.26	U
1,1-Dichloropropene	0.020	U	0.020	U	0.020	U	0.020	U	0.020	U	0.020	U	0.37	U
cis-1,3-Dichloropropene	0.012	U	0.012	U	0.012	U	0.012	U	0.012	U	0.012	U	0.71	U
trans-1,3-Dichloropropene	0.015	U	0.015	U	0.015	U	0.015	U	0.015	U	0.015	U	0.66	U
Ethylbenzene	0.0092	U	0.0092	U	0.0092	U	0.0092	U	0.0092	U	0.0092	U	0.50	U
Hexachlorobutadiene	0.025	U	0.025	U	0.025	U	0.025	U	0.025	U	0.025	U	0.58	U
2-Hexanone	0.063	U	0.063	U	0.063	U	0.063	U	0.063	U	0.063	U	0.84	U
Isopropylbenzene	0.0063	U	0.0063	U	0.0063	U	0.0063	U	0.0063	U	0.0063	U	0.42	U
p-Isopropyltoluene	0.012	U	0.012	U	0.012	U	0.012	U	0.012	U	0.012	U	0.42	U
Methylene chloride	**0.025**	**B**	**0.027**	**B**	**0.025**	**J,B**	**0.028**	**B**	**0.15**		**0.15**		**1.3**	**J,B**
4-Methyl-2-pentanone	0.071	U	0.071	U	0.071	U	0.071	U	0.071	U	0.071	U	0.71	U
Naphthalene	0.025	U	0.025	U	0.025	U	0.025	U	0.025	U	0.025	U	0.26	U
n-Propylbenzene	0.0055	U	0.0055	U	0.0055	U	0.0055	U	0.0055	U	0.0055	U	0.52	U
Styrene	0.0068	U	0.0068	U	0.0068	U	0.0068	U	0.0068	U	0.0068	U	0.52	U
1,1,1,2-Tetrachloroethane	0.0097	U	0.0097	U	0.0097	U	0.0097	U	0.0097	U	0.0097	U	0.55	U
1,1,2,2-Tetrachloroethane	0.025	U	0.025	U	0.025	U	0.025	U	0.025	U	0.025	U	0.58	U
Tetrachloroethene	0.016	U	0.016	U	0.016	U	0.016	U	0.016	U	0.016	U	0.50	U
Toluene	0.0066	U	**0.12**		0.0066	U	0.0066	U	0.0066	U	**0.066**		0.66	U
1,2,3-Trichlorobenzene	0.025	U	0.025	U	0.025	U	0.025	U	0.025	U	0.025	U	0.26	U
1,2,4-Trichlorobenzene	0.025	U	0.025	U	0.025	U	0.025	U	0.025	U	0.025	U	0.58	U
1,1,1-Trichloroethane	0.022	U	0.022	U	0.022	U	0.022	U	0.022	U	0.022	U	0.42	U
1,1,2-Trichloroethane	0.018	U	0.018	U	0.018	U	0.018	U	0.018	U	0.018	U	0.52	U
Trichloroethene	0.017	U	0.017	U	0.017	U	0.017	U	0.017	U	0.017	U	0.47	U
Trichlorofluoromethane	0.018	U	0.018	U	0.018	U	0.018	U	0.018	U	0.018	U	0.26	U
1,2,3-Trichloropropane	0.025	U	0.025	U	0.025	U	0.025	U	0.025	U	0.025	U	0.84	U
1,2,4-Trimethylbenzene	0.0076	U	0.0076	U	0.0076	U	0.0076	U	0.0076	U	0.0076	U	1.0	U
1,3,5-Trimethylbenzene	0.0050	U	0.0050	U	0.0050	U	0.0050	U	0.0050	U	0.0050	U	0.45	U
Vinyl chloride	0.0066	U	0.0066	U	0.0066	U	0.0066	U	0.0066	U	0.0066	U	1.6	U
m-Xylene & p-Xylene	0.050	U	0.050	U	0.050	U	0.050	U	0.050	U	0.050	U	1.0	U
o-Xylene	0.0066	U	0.0066	U	0.0066	U	0.0066	U	0.0066	U	0.0066	U	0.60	U

a. This is the date of sample collection

Acetone, methylene chloride, and toluene are used as rinsing solvents during Modified Method 5 sampling. These common solvents were present in the sampling area during the test series. Also, these compounds were observed in the field blanks at somewhat higher levels. Acetone was observed at a relatively high level in the SMVOC Tenax Pair Field Blank. These results indicate that fugitive contamination sources may have existed during the sampling and transport of these samples Per the SMVOC method restrictions, results from the SMVOC sampling were not blank corrected.

A practical approach was devised to use the front-half sample results for Run 1, Set 2 despite the fact that the corresponding back-half results are unusable. In order to use these results in the train total for the run, an estimate was made of the results for the corresponding back-half fraction. This estimate was obtained by averaging the results for the back halves of the remaining three sets of tubes for this run. This value is equivalent to calculating the back-half concentrations based on three (3) sets of tubes, or a total of 60 L of offgas. This approach has the benefit of not discarding valid data, in keeping with the general principle that all data obtained should be disclosed to the monitoring agencies.

5.1.3.3 VOC Internal Standard Recovery Assessment

Three internal standard compounds are spiked prior to thermal desportion of the SMVOC adsorbent tube. The same three internal standards were spiked into the aliquots of VOST condensate samples that were analyzed. These standards are used as a basis for the calculations of the concentrations of the target analytes and surrogates. A summary of the volatiles internal standard performance for all of the samples collected during Runs 1, 2, 3, and 4 are listed in Table 7. Method SW-8260 requires internal standard recovery to be at least 50 percent but not more than 200 percent of internal standard (IS) areas for the daily standard. Internal standard performance for all samples and all matrices was well within required limits (-50 to +100 percent difference relative to the IS areas for the daily standard) for all samples.

Table 7. Volatile Organic Compound (VOC) internal standard recoveries.

Field Sample No.	Run No.	Sample Description	Percent Difference[a]		
			Internal Standard #1 Fluorobenzene	Internal Standard #2 Chlorobenzene-d_5	Internal Standard #3 1,4-Dichlorobenzene-d_4
A-3359/A-3360	0031-STRT-1	Tenax Tubes #1 & #2 (Set #1)	1.7	1.8	-4.6
A-3362/A-3363	0031-STRT-1	Tenax Tubes #1 & #2 (Set #2)	3.2	-4.9	-14
A-3365/A-3366	0031-STRT-1	Tenax Tubes #1 & #2 (Set #3)	-2.2	-10	-19
A-3368/A-3369	0031-STRT-1	Tenax Tubes #1 & #2 (Set #4)	-6.1	-16	-23
A-3379/A-3380	0031-STRT-2	Tenax Tubes #1 & #2 (Set #1)	-6.4	-12	-20
A-3382/A-3383	0031-STRT-2	Tenax Tubes #1 & #2 (Set #2)	-8.2	-11	-19
A-3385/A-3386	0031-STRT-2	Tenax Tubes #1 & #2 (Set #3)	-14	-23	-32
A-3388/A-3389	0031-STRT-2	Tenax Tubes #1 & #2 (Set #4)	-15	-22	-32
A-3409/A-3410	0031-END-1	Tenax Tubes #1 & #2 (Set #1)	-18	-23	-32
A-3412/A-3413	0031-END-1	Tenax Tubes #1 & #2 (Set #2)	-15	-20	-30
A-3415/A-3416	0031-END-1	Tenax Tubes #1 & #2 (Set #3)	-6.7	-8.1	-15
A-3418/A-3419	0031-END-1	Tenax Tubes #1 & #2 (Set #4)	-1.8	-4.3	-9.1
A-3428/A-3429	0031-END-2	Tenax Tubes #1 & #2 (Set #1)	-25	-34	-37
A-3431/A-3432	0031-END-2	Tenax Tubes #1 & #2 (Set #2)	-23	-32	-39
A-3434/A-3435	0031-END-2	Tenax Tubes #1 & #2 (Set #3)	-26	-37	-44
A-3437/A-3438	0031-END-2	Tenax Tubes #1 & #2 (Set #4)	-27	-38	-43
A-3392	0031-STRT-2	Tenax Tube Pair Field Blank	-22	-30	-38
A-3394	0031-STRT-2	Tenax Tube Pair Trip Blank	-18	-30	-39
A-3441	0031-END-1	Tenax Tube Pair Field Blank	-17	-15	-28
A-3361	0031-STRT-1	Anasorb 747 Tube (Set #1)	-16	-14	-24
A-3364	0031-STRT-1	Anasorb 747 Tube (Set #2)	-28	-28	-33
A-3367	0031-STRT-1	Anasorb 747 Tube (Set #3)	-28	-31	-36
A-3370	0031-STRT-1	Anasorb 747 Tube (Set #4)	-27	-28	-28
A-3381	0031-STRT-2	Anasorb 747 Tube (Set #1)	-36	-42	-46
A-3384	0031-STRT-2	Anasorb 747 Tube (Set #2)	-25	-28	-29
A-3387	0031-STRT-2	Anasorb 747 Tube (Set #3)	-24	-26	-28
A-3390	0031-STRT-2	Anasorb 747 Tube (Set #4)	-17	-22	-25
A-3411	0031-END-1	Anasorb 747 Tube (Set #1)	-13	-11	-17
A-3414	0031-END-1	Anasorb 747 Tube (Set #2)	-14	-13	-21
A-3417	0031-END-1	Anasorb 747 Tube (Set #3)	-16	-12	-21
A-3420	0031-END-1	Anasorb 747 Tube (Set #4)	-19	-12	-20

Table 7. Volatile Organic Compound (VOC) internal standard recoveries.

Field Sample No.	Run No.	Sample Description	Percent Difference[a]		
			Internal Standard #1 Fluorobenzene	Internal Standard #2 Chlorobenzene-d_5	Internal Standard #3 1,4-Dichlorobenzene-d_4
A-3430	0031-END-2	Anasorb 747 Tube (Set #1)	-16	-25	-33
A-3433	0031-END-2	Anasorb 747 Tube (Set #2)	-24	-29	-35
A-3436	0031-END-2	Anasorb 747 Tube (Set #3)	-20	-30	-38
A-3439	0031-END-2	Anasorb 747 Tube (Set #4)	-24	-39	-33
A-3393	0031-STRT-2	Anasorb 747 Field Blank	-20	-28	-36
A-3395	0031-STRT-2	Anasorb 747 Trip Blank	-21	-25	-31
A-3442	0031-END-1	Anasorb 747 Field Blank	-19	-22	-32
A-3371	0031-STRT-1	VOST Condensate	-9.3	-7.0	-13
A-3391	0031-STRT-2	VOST Condensate	-10	-8.8	-15
A-3421	0031-END-1	VOST Condensate	-7.2	-5.0	-9.8
A-3440	0031-END-2	VOST Condensate	-8.1	-5.6	-11
A-3396	0031-STRT-2	VOST D.I. Water Trip Blank	-12	-9.3	-15

a. Recoveries of internal standard compounds are not typically calculated for samples analyzed by Method 8260B and 8270C. Percent Difference is calculated using the following equation.

$$Percent\ Difference\ (\%D) = \frac{Observed\ Value - Expected\ Value}{Expected\ Value} x\,100\%$$

Where: Observed Value = the area of the internal standard in the sample *and*

Expected Value = the area of the internal standards in the daily standard

5.1.3.4 VOC Surrogate Recovery Assessment

Four surrogate compounds were spiked onto all of the VOST samples before the thermal desorption process was initiated. The surrogate recoveries for the NWCF ETS offgas samples are presented in Table 8. Surrogate recoveries are within the targeted acceptance range (percent recovery between 50-150%), meeting the project DQOs except for sample A-3364. Low surrogate recoveries were obtained for sample A-3364 (The Anasorb 747® tube for Run 1, Set 2) and therefore the data for this sample are not usable. The results for Sample A-3364 indicate normal recoveries for the internal standard compounds, but very low recoveries for the surrogate compounds.

Table 8. Volatile Organic Compound (VOC) surrogate compound recoveries.

Field Sample No.	Run No.	Sample Description	Percent Recovery[a]			
			Dibromofluoromethane	1,2-Dichloroethane-d^b	Toluene-d_8	Bromofluorobenzene
A-3359/A-3360	0031-STRT-1	Tenax Tubes #1 & #2 (Set #1)	84	81	101	83
A-3362/A-3363	0031-STRT-1	Tenax Tubes #1 & #2 (Set #2)	90	85	114	99
A-3365/A-3366	0031-STRT-1	Tenax Tubes #1 & #2 (Set #3)	88	84	113	98
A-3368/A-3369	0031-STRT-1	Tenax Tubes #1 & #2 (Set #4)	85	80	115	92
A-3379/A-3380	0031-STRT-2	Tenax Tubes #1 & #2 (Set #1)	88	83	111	95
A-3382/A-3383	0031-STRT-2	Tenax Tubes #1 & #2 (Set #2)	91	86	110	97
A-3385/A-3386	0031-STRT-2	Tenax Tubes #1 & #2 (Set #3)	81	75	108	85
A-3388/A-3389	0031-STRT-2	Tenax Tubes #1 & #2 (Set #4)	87	80	114	90
A-3409/A-3410	0031-END-1	Tenax Tubes #1 & #2 (Set #1)	84	79	109	85
A-3412/A-3413	0031-END-1	Tenax Tubes #1 & #2 (Set #2)	85	80	109	91
A-3415/A-3416	0031-END-1	Tenax Tubes #1 & #2 (Set #3)	83	78	101	82
A-3418/A-3419	0031-END-1	Tenax Tubes #1 & #2 (Set #4)	87	86	103	80
A-3428/A-3429	0031-END-2	Tenax Tubes #1 & #2 (Set #1)	87	79	116	87
A-3431/A-3432	0031-END-2	Tenax Tubes #1 & #2 (Set #2)	79	74	105	86
A-3434/A-3435	0031-END-2	Tenax Tubes #1 & #2 (Set #3)	83	77	117	90
A-3437/A-3438	0031-END-2	Tenax Tubes #1 & #2 (Set #4)	90	82	121	92
A-3392	0031-STRT-2	Tenax Tube Pair Field Blank	76	70	102	86
A-3394	0031-STRT-2	Tenax Tube Pair Trip Blank	58	49[1]	60	41[1]
A-3441	0031-END-1	Tenax Tube Pair Field Blank	82	77	95	86
A-3361	0031-STRT-1	Anasorb 747 Tube (Set #1)	83	79	94	77
A-3364	0031-STRT-1	Anasorb 747 Tube (Set #2)	7.9[1]	6.4[1]	2.9[1]	3.6[1]
A-3367	0031-STRT-1	Anasorb 747 Tube (Set #3)	106	100	121	92
A-3370	0031-STRT-1	Anasorb 747 Tube (Set #4)	86	83	99	82
A-3381	0031-STRT-2	Anasorb 747 Tube (Set #1)	96	88	117	86
A-3384	0031-STRT-2	Anasorb 747 Tube (Set #2)	73	71	90	74

Table 8. Volatile Organic Compound (VOC) surrogate compound recoveries.

Field Sample No.	Run No.	Sample Description	Percent Recovery[a]			
			Dibromofluoromethane	1,2-Dichloroethane-d^b	Toluene-d_8	Bromofluorobenzene
A-3387	0031-STRT-2	Anasorb 747 Tube (Set #3)	77	73	92	74
A-3390	0031-STRT-2	Anasorb 747 Tube (Set #4)	73	68	96	79
A-3411	0031-END-1	Anasorb 747 Tube (Set #1)	87	84	101	84
A-3414	0031-END-1	Anasorb 747 Tube (Set #2)	91	86	107	86
A-3417	0031-END-1	Anasorb 747 Tube (Set #3)	91	88	104	88
A-3420	0031-END-1	Anasorb 747 Tube (Set #4)	78	75	96	81
A-3430	0031-END-2	Anasorb 747 Tube (Set #1)	83	76	105	88
A-3433	0031-END-2	Anasorb 747 Tube (Set #2)	88	79	110	82
A-3436	0031-END-2	Anasorb 747 Tube (Set #3)	82	75	108	85
A-3439	0031-END-2	Anasorb 747 Tube (Set #4)	85	79	110	87
A-3393	0031-STRT-2	Anasorb 747 Field Blank	77	68	99	73
A-3395	0031-STRT-2	Anasorb 747 Trip Blank	82	74	92	75
A-3442	0031-END-1	Anasorb 747 Field Blank	83	77	98	81
A-3371	0031-STRT-1	VOST Condensate	102	104	106	106
A-3391	0031-STRT-2	VOST Condensate	100	103	107	106
A-3421	0031-END-1	VOST Condensate	101	101	106	105
A-3440	0031-END-2	VOST Condensate	100	103	106	105
A-3396	0031-STRT-2	VOST D.I. Water Trip Blank	102	107	107	106
Laboratory Target Recovery Range for Tenax® & Anasorb 747® Tubes:			***50-150***	***50-150***	***50-150***	***50-150***
Laboratory Target Recovery Range for Aqueous Samples:			***80-120***	***80-120***	***80-120***	***72-135***

a. Percent Recovery is calculated using the following equation:

$$Percent\ \text{Recovery}\ (\%R) = \frac{Observed\ Value}{Expected\ Value} x\,100\%$$

Where: Observed Value = the measured mass of the surrogate standard in the sample and
Expected Value = the mass of the surrogate standard spiked into the sample.

b. This percent recovery is outside of the laboratory target recovery range.

5.1.3.5 VOC Analytical Data Quality Assessment

The sampling and analytical objectives expected for this data set were to present an acceptable characterization of the project target volatile organic compounds from the NWCF ETS offgas. The data quality indicators collectively indicate that the sampling and analytical processes for the SMVOC samples were in control during the sampling runs. Data have been collected and reviewed that allow the relative precision and accuracy to be measured for the target analytes. The data quality indicators indicate that most of the data are of acceptable quality, and that sufficient data has been obtained to characterize the project target volatile organic compounds from the NWCF ETS offgas.

There were several indications that fugitive emissions may have been present during sampling. Acetone, methylene chloride and toluene were present in at least some of the field and trip blanks. Some inconsistency of the methylene chloride results has been discussed. Toluene exhibited results that simply do not make sense, particularly with respect to higher levels of toluene that were detected in some of the back half samples. Results for these particular three constituents are not considered to demonstrate that these constituents are truly in the ETS offgas at these concentrations. These are the major classical environmental laboratory sample preparation solvents that are often detected as contaminants in sample results.

The only serious quality control deficiency was the low surrogate recovery for the Tenax®/Anasorb 747® sample for Run 1 (Set 2). This deficiency is adequately handled by the substitution of average back-half results from the other Run 1 tube sets.

5.2 Semi-volatile Organic Compounds

A standard U.S. EPA Method 0010 (Modified Method 5, or MM-5) sampling train configuration was used to collect samples of the NWCF ETS offgas for the assessment of semi-volatile organic compounds (SVOCs). A total nominal volume of 3.0 dscm of offgas was sampled in each run over 3-4 hours. The Method 0010 SVOC train configuration is comprised of six fractions:

- particulate filter
- solvent rinse of the front half of the filter holder, the sampling probe and the nozzle
- XAD-2® resin tube,
- solvent rinse of the back half of the filter holder, the coil condenser and connecting glassware,
- composite sample containing the stack gas condensate and impinger contents, and
- impinger and connecting glassware solvent rinses.

A trip/reagent blank was collected and a set of blank train (field blank) samples were analyzed to assess extraneous sources of contamination available to these samples.

5.2.1 SVOC Target Analyte List

Analyses of SVOC samples were completed per SW-846 Methods 3542 and 8270C by first extracting the samples with methylene chloride, then analyzing the extracts using GC/MS. The SVOC target analytes are listed in Table 9.

Table 9. SVOC target analyte list.

Analyte	CAS Registry Number
Acenaphthene	83-32-9
Acenaphthylene	208-96-8
Acetophenone	98-86-2
Aniline	62-53-3
Anthracene	120-12-7
Benzidine	92-87-5
Benzoic acid	65-85-0
Benzo(a)anthracene	56-55-3
Benzo(a)pyrene	50-32-8
Benzo(b)fluoranthene	205-99-2
Benzo(ghi)perylene	191-24-2
Benzo(k)fluoranthene	207-08-9
Benzyl alcohol	100-51-6
bis(2-Chloroethoxy)methane	111-91-1
bis(2-Chloroethyl)ether	111-44-4
bis(2-Ethylhexyl)phthalate	117-81-7
4-Bromophenyl-phenylether	101-55-3
Butylbenzylphthalate	85-68-7
Carbazole	86-74-8
4-Chloro-3-methylphenol	59-50-7
4-Chloroaniline	106-47-8
2-Chloronaphthalene	91-58-7
2-Chlorophenol	95-57-8
4-Chlorophenyl phenyl ether	7005-72-36
Chrysene	218-01-9
Di-n-butylphthalate	84-74-2
Di-n-octylphthalate	117-84-0
Dibenz(a,h)anthracene	53-70-3
Dibenzofuran	132-64-9
1,2-Dichlorobenzene	95-50-1
1,3-Dichlorobenzene	541-73-1
1,4-Dichlorobenzene	106-46-7
3,3'-Dichlorobenzidine	91-94-1
2,4-Dichlorophenol	120-83-2
Diethylphthalate	84-66-2
Dimethyl phthalate	131-11-3
2,4-Dimethylphenol	105-67-9

Table 9. SVOC target analyte list.

Analyte	CAS Registry Number
4,6-Dinitro-2-methylphenol	534-52-1
2,4-Dinitrophenol	51-28-5
2,4-Dinitrotoluene	121-14-2
2,6-Dinitrotoluene	606-20-2
1,2-Diphenylhydrazine	122-66-7
Fluoranthene	206-44-0
Fluorene	86-73-7
Hexachlorocyclopentadiene	77-47-4
Hexachlorobenzene	118-74-1
Hexachlorobutadiene	87-68-3
Hexachloroethane	67-72-1
Indeno(1,2,3-cd)pyrene	193-39-5
Isophorone	78-59-1
2-Methylnaphthalene	91-57-6
2-Methylphenol	95-48-7
3-Methylphenol & 4-Methylphenol	65794-96-9
N-Nitroso-di-n-propylamine	621-64-7
N-Nitrosodimethylamine	62-75-9
N-Nitrosodiphenylamine	86-30-6
Naphthalene	91-20-3
2-Nitroaniline	88-74-4
3-Nitroaniline	99-09-2
4-Nitroaniline	100-01-6
Nitrobenzene	98-95-1
2-Nitrophenol	88-75-5
4-Nitrophenol	100-02-7
2,2'-Oxybis(1-chloropropane)	108-60-1
Pentachlorobenzene	608-93-5
Pentachloronitrobenzene	82-68-8
Pentachlorophenol	87-86-5
Phenanthrene	85-01-8
Phenol	108-95-2
Pyrene	129-00-0
Pyridine	110-86-1
1,2,4-Trichlorobenzene	120-82-1
2,4,5-Trichlorophenol	95-95-4
2,4,6-Trichlorophenol	88-06-2
1,2,4,5-Tetrachlorobenzene	95-94-3

The samples were also analyzed for non-target organic compounds as directed in the QAPjP. A GC/MS library search was performed on each SVOC sample (including the condensate samples) for TICs (tentatively identified compounds). The search was performed for the thirty largest non-target compounds that exhibited a response greater than 10% of the response of the nearest internal standard (the extract is spiked at 20 μg/mL). The standard extract volume was 1.0 mL; hence, the TICs were reported down to a level of 2 μg when the original extract was not diluted (dilution factor or DF = 1). The back-half composite sample extracts for Runs 1 through 4 were analyzed at a five-fold dilution (DF = 5); therefore, TICs in these fractions were only reported down to 10 μg.

The library search was conducted against the National Bureau of Standards library of mass spectral data containing an estimated 75,000 compounds. The matching criteria included a nominal 85% match of the mass spectral features, and analyst discretion of all identities reported. TICs that were derived from column bleed, surrogate addition, or aldol condensation were excluded from the report. Also, compounds that were reported as SMVOC target compounds were not reported as semi-volatile TICs because the SMVOC method provides more reliable data for these compounds.

5.2.2 SVOC Analytical Results

The particulate filter was combined with its associated solvent rinses to form a "front-half" composite sample. The XAD-2 resin tube was combined with its associated solvent rinses to form a "back-half" composite sample. The stack gas condensate, impinger contents and associated glassware rinses were also combined to form a composite sample. These three fractions are analyzed separately. Unique data quality control indicators are used for each fraction.

Tabulated data summaries that present the SVOC data are given in Appendix A. These tables have been extracted from the STL Analytical Laboratory Final Report for this project. For each Method 0010 offgas sampling run, the "SVOC Run Total" for each analyte (in mass units of μg) represents the sum of the amounts found in all of the SVOC fractions collected during that run.

5.2.3 SVOC Data Quality Assessment

The sample fractions were sent to STL via overnight express mail to ensure that sample preservation and analysis schedules required by the QAPjP would be met. All of the samples were received by the laboratory in good condition. Sample extractions were performed within the requirements specified in the QAPjP.

On the basis of all the quality assurance indicators, all of the semi-volatile organic compound data obtained from the SVOC runs are usable and representative of the NWCF ETS offgas contents. The only deficiencies in accuracy and precision indicated by the laboratory control samples (LCS) and matrix spike samples appear to be unrelated to sample data quality.

Blank sample data indicate that sources of fugitive contamination available to the NWCF ETS offgas samples were minimized. Only phthalate esters were found in significant concentrations in the blanks. Although the back half composite containing the XAD-2® sample extracts were somewhat hostile to the internal standard compounds, the analysis of these extracts at two levels of dilution appears to provide a reliable assessment of the offgas contents.

Recoveries of the surrogates indicate that the preparation and analysis processes during the SVOC sample determinations were in control with respect to all of the analytes for the offgas sample analyses. The surrogate recoveries are within the prescribed acceptance ranges and do not indicate any bias to the data. Sample dilution was required to achieve acceptable recovery of three of the six internal standards,

and this had the affect of increasing detection limits for those analytes that are correlated to the recovery of these standards.

5.2.3.1 SVOC Blank Data Assessment

A standard SVOC trip/reagent blank (unused, sealed XAD-2® resin tube) and a blank train run samples was collected to assess potential fugitive contamination sources in the sampling environment. Review of the SVOC blank indicates that very little contamination due to fugitive emissions exists in the samples as a result of storage or transport of the sample collection media. The trip blank data exhibited low levels of acetophenone and 1,4-dichlorobenzene that are below the standard laboratory reporting limit (RL). Several tentatively identified compounds were identified in the trip blank data. Notably, benzaldehyde, methyl benzoate, and ethyl benzaldehyde were found, along with several miscellaneous hydrocarbons. These compounds were probably artifacts of the XAD-2® medium or the transport and storage of the samples, and were not found in the laboratory method blanks.

Review of the SVOC blank train results indicates that little contamination of the samples occurred as a result of sample handling or contact with the MM-5 sampling train components. Acetophenone and 1,4-dichlorbenzene were found at low levels that were similar to the trip blank, and may have originated in the sampling media, or were possibly introduced to the media during transport and storage of the samples. The target analytes found in the blank train samples also included di-n-butylphthalate, bis-2-ethylhexylphthalate, and di-n-octylphthalate. The phthalate esters are considered common laboratory contaminants, and are commonly found in certain plastics and plastic tubing. These compounds were not found in the laboratory method blanks, so their origin appears to be with the sampling process. The TICs found in the back-half composite sample of the blank train were similar in identity and concentration to those found in the trip/reagent blank. Benzaldehyde, methyl benzoate, ethyl benzaldehyde, and several miscellaneous hydrocarbons were observed at levels that were similar to the trip/reagent blank results. The origin of these contaminants may have been either the sampling media or the transport and storage of the samples. The front-half and impinger composite samples exhibited low concentrations of some additional TICs that are not found in the back-half composite samples.

5.2.3.2 SVOC Internal Standard Recovery Assessment

Internal standards are used as the basis for calculation of the concentrations of the target analytes and surrogates. Six IS compounds were spiked into all of the sample extracts prior to analysis. Method SW-8270 required limits, in terms of percent difference relative to the IS area for the lab's daily standard, are –50% to +100%. The internal standard responses for the front-half composite sample extracts, and the condensate and impinger contents composite sample extracts were acceptable and do not indicate any deficiency in data quality. Also, the quality assurance samples exhibit acceptable recoveries of the internal standards. The only cases of significantly reduced recovery of the internal standards are noted for the back-half fractions of the offgas samples which include the XAD-2® resin. A summary of the semi-volatile internal standard performance is given in Table 10.

Table 10. SVOC train sample internal standard compound recoveries.

Field Sample No.	NWCF ETS Sample ID	Sample Description	Analytical Dilution Factor	Percent Difference (%)[a]					
				Internal Standard 1 1,4-Dichlorobenzene-d_4	Internal Standard 2 Naphthalene-d_8	Internal Standard 3 Acenaphthene-d_{10}	Internal Standard 4 Phenanthreene-d_{10}	Internal Standard 5 Chrysene-d_{12}	Perylene-d_{12}
A-3353/A-3354	0010-STRT-1	Particulate Filter/Front Half of the Filter Holder and Probe Solvent Rinses	1	9.2	7.5	-5.6	-16	-27	-22
A-3355/A-3356	0010-STRT-1	XAD-2 Resin Tube/Back Half of the Filter Holder and Coil Condenser Solvent Rinses	5	-28	-29	-61[b]	-38	-57	-100[b]
			100	7.0	3.2	-1.6	.0.62	3.5	-50
A-3357/A-3358	0010-STRT-1	Condensate, Impinger Contents, and Glassware Solvent Rinses	1	13	12	0.16	-4.4	-20	-16
A-3372/A-3373	0010-STRT-2	Particulate Filter/Front Half of the Filter Holder and Probe Solvent Rinses	1	12	6.9	-1.1	-7.0	-24	-20
A-3374/A-3375	0010-STRT-2	XAD-2 Resin Tube/Back Half of the Filter Holder and Coil Condenser Solvent Rinses	5	2.4	-5.2	-25	-14	-27	-100[b]
			100	2.4	1.9	-1.2	-3.2	-1.0	-24
A-3376/A-3377	0010-STRT-2	Condensate, Impinger Contents, and Glassware Solvent Rinses	1	-15	-18	-16	-16	-26	-24
A-3397/A-3398	0010-STRT-2	Blank Train Particulate Filter/Front Half of the Filter Holder and Probe Solvent Rinses	1	5.3	2.4	-5.8	-11	-24	-22
A-3399/A-3400	0010-STRT-2	Blank Train XAD-2 Resin Tube/Back Half of the Filter Holder and Coil Condenser Solvent Rinses	1	-0.69	-7.8	-18	-21	-34	-27
A-3401/A-3402	0010-STRT-2	Blank Train Condensate, Impinger Contents, and Glassware Solvent Rinses	1	7.2	9.3	-1.9	-9.8	-22	-18
A-3403/A-3404	0010-END-1	Particulate Filter/Front Half of the Filter Holder and Probe Solvent Rinses	1	7.6	9.6	0.92	-13	-26	-20
A-3405/A-3406	0010-END-1	XAD-2 Resin Tube/Back Half of the Filter Holder and Coil Condenser Solvent Rinses	5	-6.6	-5.7	-37	-14	-30	-100[b]
			100	1.7	1.8	1.4	-2.4	3.1	-65[b]
A-3407/A-3408	0010-END-1	Condensate, Impinger Contents, and Glassware Solvent Rinses	1	0.38	4.2	-2.7	-8.3	-22	-20
A-3422/A-3423	0010-END-2	Particulate Filter/Front Half of the Filter Holder and Probe Solvent Rinses	1	5.7	4.1	-2.2	-13	-28	-29
A-3424/A-3425	0010-END-2	XAD-2 Resin Tube/Back Half of the Filter Holder and Coil Condenser Solvent Rinses	5	14	9.9	-28	0.05	-19	-100[b]
			100	-2.9	-2.0	-6.5	-6.0	-3.7	-66[b]
A-3426/A-3427	0010-END-2	Condensate, Impinger Contents, and Glassware Solvent Rinses	1	1.8	4.2	-3.1	-8.7	-20	-16
A-3378	0010-STRT-2	XAD-2 Resin Tube Trip/Reagent Blank	1	-14	-15	-22	-20	-29	-27
Internal Standard Laboratory Percent Difference Acceptance Limits:				-50 to 100	-50 to 100	-50 to 100	-50 to 100	-50 to 100	-50 to 100

Table 10. SVOC train sample internal standard compound recoveries.

Field Sample No.	NWCF ETS Sample ID	Sample Description	Analytical Dilution Factor	Percent Difference (%)[a]					
				Internal Standard 1 1,4-Dichlorobenzene-d_4	Internal Standard 2 Naphthalene-d_8	Internal Standard 3 Acenaphthene-d_{10}	Internal Standard 4 Phenanthreene-d_{10}	Internal Standard 5 Chrysene-d_{12}	Perylene-d_{12}

a. Recoveries of internal standards are not typically calculated for samples analyzed by Method 8260B and 8270C, and internal standard recoveries are evaluated as Percent Difference from the daily standard. Percent Difference is calculated using the following equation:

$$Percent\ Difference\ (\%D) = \frac{Observed\ Value - Expected\ Value}{Expected\ Value} \times 100\%$$

Where: Observed Value = the area of the internal standard in the sample *and*
Expected Value = the area of the internal standard in the daily standard.

b. This value is outside of the laboratory and project target acceptance range.

The sample extracts of the back-half fractions of the offgas sample trains were analyzed at a dilution factor of five since analysis of the extracts without dilution gave evidence of loss of several of the internal standards. The internal standard perylene-d12 did not recover from the extract analyses at a dilution factor of five. There was insufficient recovery of this internal standard to allow quantification of the related target analytes without applying further dilution. The internal standard compounds acenaphthene-d10 and chrysene-d12 also exhibited recoveries that are lower than the target acceptance criteria in the 1:5 analysis of the extract for the back-half fraction extract for Run 1. However, there was sufficient recovery of each of these internal standards to provide useful results for the related target analytes.

A second extract analysis was performed for each of the offgas back-half composite samples at a dilution factor of 100. The back-half composite sample extracts exhibit reduced recovery of perylene-d12 at the increased dilution factor of 100, but there was sufficient recovery of perylene-d12 to quantify the seven target analytes that are calculated relative to it. The results based on perylene-d12 for the 1:100 dilution of the extracts are usable.

5.2.3.3 SVOC Surrogate Recovery Assessment

Six surrogate compounds were spiked onto all of the SVOC samples before extraction per SW-846 Method 8270C. Three of the surrogates are base/neutral compounds, and three of the surrogates are acid extractable. All of the three acid extractable surrogates are phenols, which are a class of organic compounds that contain a benzene ring with the hydroxyl group attached. A sampling surrogate compound was also applied to the XAD-2® resin tubes at the laboratory before sampling. This additional surrogate provides a measurement of the efficiency of the entire process, from sampling to the conclusion of the analysis. The sampling surrogate applied to the XAD-2® tubes used to collect samples was $^{13}C_3$-naphthalene. This is a base-neutral compound that is distinguished from the native naphthalene by carbon-13 labeling. A summary of the semi-volatile surrogate performance is given in Table 11.

Table 11. SVOC surrogate compound recoveries.

Field Sample No.	NWCF ETS Sample ID	Sample Description	Percent Recovery (%)[a]						
			2-Fluorophenol	Phenol-d_5	Nitrobenzene-d_5	2-Fluorobiphenyl	2,4,6-Tribromophenol	Terphenyl-d_{14}	Surrogate $^{13}C_3$-Naphthalene
A-3353/A-3354	0010-STRT-1	Particulate Filter/Front Half of the Filter Holder and Probe Solvent Rinses	71%	66%	66%	70%	75%	76%	NA
A-3355/A-3356	0010-STRT-1	XAD-2 Resin Tube/Back Half of the Filter Holder and Coil Condenser Solvent Rinses	65%	50%	87%	148%[b]	44%	122%	78%
A-3357/A-3358	0010-STRT-1	Condensate, Impinger Contents, and Glassware Solvent Rinses	73%	75%	80%	86%	84%	93%	NA
A-3372/A-3373	0010-STRT-2	Particulate Filter/Front Half of the Filter Holder and Probe Solvent Rinses	65%	61%	64%	66%	70%	76%	NA
A-3374/A-3375	0010-STRT-2	XAD-2 Resin Tube/Back Half of the Filter Holder and Coil Condenser Solvent Rinses	68%	55%	84%	106%	52%	96%	86%
A-3376/A-3377	0010-STRT-2	Condensate, Impinger Contents, and Glassware Solvent Rinses	39%	35%	43%	46%	53%	82%	NA
A-3397/A-3398	0010-STRT-2	Blank Train Particulate Filter/Front Half of the Filter Holder and Probe Solvent Rinses	75%	68%	73%	76%	74%	81%	NA
A-3399/A-3400	0010-STRT-2	Blank Train XAD-2 Resin Tube/Back Half of the Filter Holder and Coil Condenser Solvent Rinses	69%	66%	74%	81%	3.1%[b]	82%	78%
A-3401/A-3402	0010-STRT-2	Blank Train Condensate, Impinger Contents, and Glassware Solvent Rinses	67%	71%	72%	79%	75%	89%	NA
A-3403/A-3404	0010-END-1	Particulate Filter/Front Half of the Filter Holder and Probe Solvent Rinses	72%	67%	69%	71%	72%	78%	NA
A-3405/A-3406	0010-END-1	XAD-2 Resin Tube/Back Half of the Filter Holder and Coil Condenser Solvent Rinses	79%	57%	90%	128%[b]	50%	100%	86%
A-3407/A-3408	0010-END-1	Condensate, Impinger Contents, and Glassware Solvent Rinses	77%	80%	77%	78%	81%	90%	NA
A-3422/A-3423	0010-END-2	Particulate Filter/Front Half of the Filter Holder and Probe Solvent Rinses	75%	71%	74%	76%	66%	81%	NA
A-3424/A-3425	0010-END-2	XAD-2 Resin Tube/Back Half of the Filter Holder and Coil Condenser Solvent Rinses	68%	55%	92%	134%	54%	110%	85%
A-3426/A-3427	0010-END-2	Condensate, Impinger Contents, and Glassware Solvent Rinses	67%	76%	78%	81%	83%	88%	NA
A-3378	0010-STRT-2	XAD-2 Resin Tube Trip/Reagent Blank	55%	61%	63%	67%	0.0%[b]	84%	66%
		Surrogate Laboratory Percent Recovery Acceptance Range:	19-100%	15-124%	35-122%	34-115%	33-130%	28-132%	50-150%

a. Percent recovery of surrogate compounds is calculated using the following equation:

$$Percent\ Recovery\ (\%) = \frac{Observed\ Value}{Expected\ Value} \times 100\%$$

where: Observed Value = the measured mass of the surrogate standard in the sample *and*
Expected Value = the mass of the surrogate standard spiked on the sample.

b. This value is outside of the laboratory and project target acceptance range.

The laboratory surrogate recoveries that were obtained for the front-half composite samples are generally excellent. There are no obvious problems with the analysis of this matrix, which includes the particulate filter and solvent rinses of the front-half of the filter holder and the probe. All of the laboratory surrogate percent recovery values for the front-half samples were all within the target acceptance range. There were no significant differences between the acid surrogate performance for Runs 1 through 4 and the blank train.

The back-half samples exhibited good recoveries for both the base-neutral and the acid extractable surrogates. 2-Fluorobiphenyl recovery from the back-half fractions of Runs 1, 3 and 4 were above the target acceptance range for surrogate recovery, while the percent recovery of 2-fluorobiphenyl for Run 2 was near the upper end of the target acceptance range. The percent recovery of 2-fluorobiphenyl for both the blank train and the XAD-2® resin tube trip/reagent blank was near the center of the target acceptance range. Reduced recovery of the related internal standard, acenapthylene-d_{10} in the offgas samples appears to cause the observed high recoveries of 2-fluorobiphenyl. A high bias to the results for all of the target analytes that are calculated against acenaphthylene-d_{10} appears to be indicated by the increased recovery of 2-fluorobiphenyl. Inspection of the data shows that there are no positive results based on acenaphthylene-d_{10}. Therefore, the detection limits are defensible and there is no adverse impact on data quality.

Phenol-d_5 and 2-fluorophenol exhibited acceptable recovery in the blank train back-half sample and the XAD-2 trip/reagent blank, but 2,4,6-tribromophenol did not recover well. The 2,4,6-tribromophenol results were much lower than the target acceptance limits, with no recovery at all from the trip/reagent blank sample. These results were atypical of the data set in that the 2,4,6-tribromophenol recoveries in the offgas samples were well within the target acceptance range for all four runs. The associated laboratory method blank exhibited a good recovery of the 2,4,6-tribromophenol, but the laboratory control sample (LCS) and the laboratory control sample duplicate (LCSD) each exhibited a low recovery of this surrogate. Also, the LCS have low recoveries of 4-nitrophenol and pentachlorophenol, which are acidic compounds potentially sensitive to pH affects. There was no control of pH for these solid matrix samples. The surrogates were applied to the matrix in a Soxhlet extractor immediately prior to extraction. There were low levels of nitrates present in the offgas, and it is probable that the XAD-2 samples were rendered slightly acidic by contact with the offgas. Acidic samples are more likely to release the acid extractable surrogates during the extraction process. Recovery of the 2,4,6-tribromophenol was well within the target acceptance limits for the offgas samples; hence, there is no impact on the offgas data quality because the phenomenon is not observed in the offgas sample results.

On the basis of laboratory surrogate recovery, the results for the SVOC train back-half composite sample data were usable for assessment of the NWCF ETS offgas contents. All of the laboratory surrogate recoveries are consistently within the target acceptance range. The condensate, impinger contents and associated glassware rinse samples also exhibited acceptable results for all of the laboratory surrogate compounds. The sampling surrogate compound that was applied to the XAD-2® resin tubes at the laboratory before sampling provide an independent measurement of the efficiency of the entire process, from sampling to the conclusion of the analysis. The $^{13}C_3$-naphthalene sampling surrogate recovered well from all runs. This further indicates that the data for the SVOCs are reliable.

5.2.3.4 SVOC Laboratory Control Sample and Matrix Spike Sample Performance

Laboratory control samples associated with the front half (glass fiber filter) matrix were prepared and analyzed in duplicate as required by the QAPjP. There are two spiked compounds that exhibited results that were outside the target acceptance limits. The recovery of 2,4-dinitrotoluene in the LCS was slightly below the target acceptance range. The relative percent difference (RPD) for pentachlorophenol was above the target acceptance range. However, neither of these results indicates a significant loss of

data quality. All of the laboratory surrogates in the LCS/laboratory control samples duplicate (LCSD) analyses associated with the front-half samples are within target acceptance ranges.

Laboratory control samples associated with the back-half composite samples were prepared and analyzed in duplicate. The base-neutral surrogate recovery results for the LCS were similar to the results for the field samples, and were within the stated target acceptance range. The LCS exhibit low recoveries of 4-nitrophenol and pentachlorophenol, which are acidic compounds that are sensitive to pH effects. Pentachlorophenol is the most acidic of the spiked compounds, and had almost no recovery. The laboratory control sample and laboratory control sample duplicate both have low recoveries of the acidic laboratory surrogate 2,4,6-tribromophenol. This appears to be because there was no control of pH for these solid samples. The surrogate recoveries of similar compounds were well within target acceptance ranges for the NWCF ETS offgas samples; consequently, there is no impact on the offgas data quality as a result of these low recoveries in the LCS/LCSD.

Laboratory control samples based upon the aqueous matrix were prepared and analyzed in duplicate. The condensate and impinger contents sample for Run 2 was split into three aliquots, and a matrix spike/matrix spike duplicate pair was analyzed. All spiked analyte and surrogate percent recovery and RPD results for the laboratory control and matrix spike samples were within the stated target acceptance ranges.

5.3 Metals

A standard U.S. EPA Method 0060 Multi-Metals Train (MMT) configuration was used to collect NWCF ETS offgas samples for the assessment of metals (including mercury) content. An offgas sample having a nominal volume of 3.0 m^3 was collected over a duration of 3-4 hours. Two sample collection runs were completed at the beginning and two at the end of consecutive evaporator batches to provide a total of four runs to characterize metals emissions. The following sample components were collected from the 0060 train after the completion of each run:

- Particle Filter
- 0.1N Nitric Acid (HNO_3) Probe Rinse
- 5% HNO_3/10% H_2O_2 Impinger Contents
- Empty Impinger 4 Contents
- 4% $KMnO_4$/10% H_2SO_4 Impingers
- 8N HCl Impinger Rinses

Final nitric acid probe rinse samples were collected after the sampling was completed. The glass-lined sampling probe could not be routinely removed from the offgas sampling manifold for rinsing after each run. Instead, the front-half rinse samples were limited to the connecting tubing, filter housing elements and other connecting glassware that were installed outside the manifold assembly. The glass-lined probe was only removed from the offgas line after all offgas trains were completed for the test series. Probe rinse samples of the glass-lined probe were collected to assess the maximum amount of metals that adhered to the inside of the probe during testing. The probes were rinsed three times with acetone, followed by three rinses with 0.1N nitric acid. These samples were combined for metals analysis after the acetone probe rinses were analyzed for PM. Since the same probe was used for all sampling runs used during the test series, a larger volume of offgas was represented by these acetone and nitric acid probe rinses than was pulled through the probe just for metals analysis.

Field reagent and blank samples were collected in compliance with the QAPjP. Laboratory method blanks were also prepared and analyzed in support of the data, as required by SW-846 sample analysis requirements.

5.3.1 Metals Target Analyte List

The target analyte list for the metals is given in Table 12. These metals, except for Hg, were analyzed by inductively coupled argon plasma spectroscopy per EPA Method 6010B. Mercury (Hg) was analyzed using cold vapor atomic absorption spectroscopy (CVAAS) Method 7470A.

Table 12. Metals target analyte list.

Aluminum (Al)	Chromium (Cr)	Nickel (Ni)
Antimony (Sb)	Cobalt (Co)	Selenium (Se)
Arsenic (As)	Copper (Cu)	Silver (Ag)
Barium (Ba)	Lead (Pb)	Thallium (Tl)
Beryllium (Be)	Manganese (Mn)	Vanadium (V)
Cadmium (Cd)	Mercury (Hg)	Zinc (Zn)

5.3.2 Metals Analytical Results

The compatible matrices of the MMT samples were separated into the train's front-half and back-half samples during the sample preparation steps. The front-half samples consisted of the 0.1N nitric acid probe and filter housing rinses, and the particulate filter. The combined offgas condensate, and the 5% HNO_3/10% H_2O_2 impinger catches comprised the MMT back-half composite. The train's fourth impinger was used to separate the components of the train that contained 4% $KMnO_4$/10% H_2SO_4 from the peroxide contained in the front impingers. The fourth impinger was left empty during set-up. Its contents at the completion of a run and 0.1N HNO_3 collection rinses were only analyzed for mercury. The 4% $KMnO_4$/10% H_2SO_4 solution is used to trap elemental mercury (Hg). Thus, a composite sample was prepared from these impingers for the analysis of mercury, only. The internal surfaces of the back-half impinger glassware received a final deionized (D.I.) water rinse during the train sample collections. These rinsates were collected and added to the appropriate impinger sample and included in the back-half composites. A final rinse of the potassium permanganate impingers was conducted with 8N HCl, and was collected as a separate sample for mercury analysis.

The sample collection and analysis are outlined in the STL final report. Sample fraction and run totals are listed in Appendix A. The run totals (in μg) are the sum of results for the front half and back-half composite samples, and in the case of mercury, include the permanganate/sulfuric impinger composite totals. Results for the blank trains were not used to correct train totals as allowed by Method 0060 guidance.

5.3.3 Metals Data Quality Assessment

Samples were shipped using overnight delivery service to the laboratory. All Method 0060 train samples that were collected during the offgas sampling program were received at the laboratory in good condition. No losses of samples due to breakage or loss of shipment occurred. Samples derived from the Method 0060 trains are not required to be refrigerated after sample collection. All of the run fractions were processed and analyzed by STL in the time requirements specified in the QAPjP.

The data quality indicators of the sampling and analytical processes for the Method 0060 train samples indicate that the metals data collected from these samples represent acceptable characterization of the offgas emissions. Sufficient data has been collected to allow accuracy and precision to be measured for these parameters. Accuracy has been measured by analyzing LCS, post digestion spikes (PDS), and a limited set of matrix spikes. Precision was measured by the preparation and analysis of laboratory control sample duplicates. The data quality indicators present sufficient evidence that the data are of acceptable quality and are usable for the NWCF ETS offgas emissions inventory.

5.3.3.1 Metals Trains Reagent and Blank Data Assessment

Laboratory method blanks were prepared and analyzed in support of the data. Review of the laboratory method blank data indicates that the laboratory did not appear to introduce significant fugitive contamination to the samples.

Reagent blanks were collected in the field and processed to assess the inherent metallic analyte background in the media being used for sampling. A representative front-half composite reagent blank (a quartz fiber particulate filter and 120 mL 0.1 N HNO_3 rinse reagent), a representative back-half reagent blank (175 mL of the 5% HNO_3/10% H_2O_2 impinger solution), and a sample of the INTEC-supplied deionized water (210 mL) were collected and analyzed for the project target metallic analytes including mercury. Portions of the 4% $KMnO_4$/10% H_2SO_4 impinger solution, and the 8N HCl rinse solution were collected and analyzed for mercury. Aluminum and selenium were detected in the front-half composite reagent blank at levels that were above the laboratory RL. The amounts of aluminum, antimony, barium, nickel, selenium, and zinc indicate that the reagent may have contributed to the offgas sampling train front-half results. Other metals were detected at relatively insignificant amounts. The back-half reagent blank exhibits manganese and zinc above the laboratory RL. The levels of aluminum, barium, chromium, nickel, lead, manganese, selenium, and zinc indicate that the reagent may have contributed to the offgas sampling train back-half fraction results. The INTEC deionized water did not exhibit significant levels of any metals, although aluminum was found at 5.2 μg.

The blank train samples exhibit similar results as those obtained for the reagent blanks, with two exceptions. Manganese was found in the blank train back-half composite sample at a level (3700 μg) that far exceeded the offgas sample results. This occurrence can be traced to contamination of the back-half composite sample by $KMnO_4$ reagent. Zinc was found at a level of 34 μg. This amount is roughly an order of magnitude higher that the reagent blank sample, and similar to the offgas sampling train results.

5.3.3.2 Method 0060 Train Accuracy and Precision Assessment

The quality control procedures that were implemented during the analyses of these samples for the purposes of assessing the general accuracy and precision of the analytical processes included the analysis of LCSs, LCSDs, PDS, and MS/MSD samples. Laboratory control samples test the accuracy and precision of the laboratory processes independent of stack gas matrix effects. The quantitative recovery of PDSs provides a second indicator of accuracy for the metals analysis for matrices (e.g., the front-half and back-half samples) from which matrix spikes cannot be prepared without affecting detection limits.

These spikes act as "internal standards" and signal when problems are encountered with the digestate matrix. When acceptable quantitative recoveries are observed for a PDS, the sample introduction onto the ICP is considered to be taking place correctly and the instrument has quantified the analytes present in the digestate correctly. Low recoveries typically indicate that viscosity or matrix interference effects may have been encountered. Matrix spikes (post sampling) of mercury were applied to the four back-half fraction samples. Accurate and precise recovery of the spiked mercury indicates that the entire analytical process, including preparation, is in control.

Matrix spikes of the ICP metals were not performed for the back-half composite sample matrix because this process would raise detection levels while adequate quality control information can be otherwise obtained. In terms of compliance, SW-846 Method 0060 does not require matrix spike recovery information for the evaluation of metals train samples, while SW-846 Method 6010B requires them to be performed for each sample batch or sample delivery group (SDG). The reasoning behind the lack of matrix spike requirements in the Method 0060 relates to the difficulty of dividing a front-half train portion, which contains the particulate filter, into three equal portions of the PM sample. Dividing the filter is a precarious operation. Particulate matter may not be evenly distributed on the filter, and cutting the filter to obtain equal portions of particulate material on each portion of the filter is difficult to execute. Analysis of MS/MSD samples for the front-half composite sample in not technically advisable. Particulate matter is the fraction of the captured stack gas sample that contributes typically the greatest level of metals to the Method 0060 samples.

Post digestion spikes were allowed in the QAPjP as an alternative QC measurement to replace MS/MSDs for both the front half and the back half train fractions. Post digestion spikes give an adequate demonstration of recovery for these samples, and are allowed by quality procedures sections of SW-846 methods for flame atomic absorption and graphite furnace atomic absorption. When coupled with laboratory control samples, and laboratory control sample duplicates, the quality of Method 0060 train sample analysis can be completely evaluated.

The LCS and PSDs corresponding to the front-half composite samples exhibited acceptable recoveries for all target metals. The recoveries of the metals, were within the target recovery range of 75% to 125%, with the exception of manganese and mercury. Mercury recoveries were high for Run 1, Run 2, Run 4 and the Final Acetone and Nitric Acid Probe Rinse. Manganese exhibited a low recovery only for Run 4.

The back-half sample fractions were also supported by laboratory control sample analysis and post digestion spike analysis. Post digestion spikes were analyzed for the back-half samples from Runs 1 and 2. The laboratory control sample results were accurate and reproducible, and indicate that the analytical processes were in control. All of the post digestion spike results were acceptable, but the mercury results have little meaning because the native levels of mercury in the samples were very high relative to the spike levels. Matrix spikes of the Run 1 back-half fractions for mercury of the impinger number 4 contents, 4% $KMnO_4$/10% H_2SO_4 impinger contents, and the 8N HCl rinse fractions were successful. Matrix spike results for the back-half composite sample for Run 1 could not be calculated because the native level of mercury was too high, relative to the spike level.

In general, the metals laboratory control sample, post digestion spike, and matrix spike recoveries indicate acceptable performance and provide a strong indication that the analytical processes used were in control. A review of the calculated RPDs (presented in the final STL data package and archived for this project), obtained from the analysis of LCS, indicates that these analytical processes are highly reproducible.

The data were reviewed for evidence of interelement interference because ICP (AES) analysis is subject to interelement interference from "high" levels of a few analytes. Aluminum (Al) is the only element present in the NWCF ETS samples that is in a sufficiently high concentration to be considered an interfering influence on the results for target analytes. The aluminum concentration for the Run 3 front-half composite sample is a potential interferent that could increase the results for vanadium. There is no effect, because the result for vanadium for this sample was non-detectable.

5.4 Particulate Matter and Acid Gases

The standard EPA Method 0050 HCl/Cl_2/Particulate Train (SW-846 Method 0050) configuration was used to collect samples from the NWCF ETS offgas for the assessment of PM and acid gas vapors. An offgas sample having a nominal volume of 3.0 dscm was isokinetically collected over 3-4 hours during each sampling run. A blank train and applicable reagent blanks were collected to support the QA/QC requirements specified in the QAPjP.

A final probe rinse sample was collected after the test runs for particulate analysis. The glass-lined sampling probe could not routinely be removed from the offgas sampling manifold for rinsing after each run for safty reasons as previously discussed. Instead, the front-half acetone rinse samples for particulate were limited to accessible tubing, filter housing elements and other connecting glassware that were installed outside the manifold and probe assembly. The glass-lined probe was only removed from the manifold after all offgas sampling trains were collected. An acetone probe rinse sample of the glass-lined probe was collected after the test runs to assess the maximum amount of particulate materials that adhered to the inside of the probe during testing. The probes were rinsed three times with acetone, and the samples were submitted for particulate analysis.

5.4.1 Acid Gas Target analytes

The target analytes for this method are hydrogen chloride (HCl), chlorine (Cl_2), hydrogen fluoride (HF), nitrate (NO_3-), nitrite (NO_2-), and PM.

5.4.2 Analysis of PM and Acid Gases

The particulate samples collected included two fractions: (1) an acetone rinse of the probe and filter housing assembly, and (2) a particulate filter. Composite samples containing the contents of the first, second, and third impingers of the train were collected for HCl, HF, HNO_3, and HNO_2 analysis. The first impinger was empty at the beginning of the sampling run and served as a moisture knockout impinger. The second and third impingers were each initially charged with 100 mL of 0.1N H_2SO_4. These acidic impingers allowed for the dissociation and collection of HCl, HF, HNO_3, and HNO_2 from the offgas. A composite sample of the fourth and fifth impinger contents, which were each initially charged with 100 mL of 0.1N NaOH, were analyzed for Cl^-, F^-, NO_3^-, and NO_2^-. Chlorine gas (Cl_2) present in the offgas does not freely dissociate in the acidic H_2SO_4 medium; therefore, it passes through the first three impingers as an unreacted gas and reacts when it comes in contact with the NaOH solution as follows:

$$Cl_2 + 2\,OH^- \xrightarrow{NaOH} 2\,OCl^- + Cl^- + H_2O$$

At STL, the particulate filter samples were dried at 105°C and the acetone probe rinse samples were evaporated to dryness at room temperature. Both fractions were stored in a dessicator for 24 hours, then analyzed gravimetrically. Replicate weights were obtained until constant weights were achieved.

The difference between pre-sampling and post-drying gravimetric measurements were then calculated for each sample.

The 0.1N H_2SO_4 and 0.1N NaOH impinger samples were analyzed by ion chromatography using SW-846 Methods 9056 and 9057, as implemented by STL Analytical Laboratories Method, KNOX-WC-0005, *Anion Analysis by Ion Chromatography,* KNOX-WC-0005 (April 20,1999). The calibration range extended from 0.5 mg/L to 20 mg/L for all of the target anions. In order to quantify all of the target anions, several analyses were conducted at different dilution factors that ranged from 1 to 10. Dilution was performed both to bring the sample concentration within the instrument calibration range and to overcome matrix effects. The optimum value was chosen for reporting, with the lowest achieved detection limits reported in each case. The final data for each anion were based on analyses that were within the calibration range of the instrument.

The tabulated data summaries provided in the STL Final Report are listed in Appendix A. Each anion result is reduced to a "Risk Result" by selecting the default value for use in risk assessment calculations in accordance with project guidelines.

5.4.3 PM and Acid Gas Data Quality Assessment

Samples were shipped using Federal Express overnight delivery service to the laboratory. All Method 0050 train samples that were collected during the offgas sampling program were received at the laboratory in good condition. No losses of samples due to breakage or loss of shipment occurred. All Method 0050 train fractions were processed on schedule, as required by the QAPjP, and analytical results were obtained for all of the expected analyses.

Sufficient data have been collected and reviewed to address the relative precision and accuracy of the particulate and anion target analyte measurements. The data quality indicators present sufficient evidence that the data are of acceptable quality and are usable for the NWCF ETS emissions inventory.

5.4.3.1 Method 0050 Train Reagent Blank Assessment

A particulate filter, the 0.1N H_2SO_4 and 1N NaOH reagents, and a sample of the INTEC supplied deionized (D.I.) water were collected during sample collection and were processed as reagent blanks in order to assess the presence of background analytes. These reagent blank samples were analyzed for the same parameters as the actual train samples, and showed minimal background levels of the target analytes. Chloride was detected in the 0.1N H_2SO_4 reagent blank at a level that was below the RL for the laboratory. Nitrate was detected in the 0.1 N NaOH reagent blank and the D.I. water reagent blank at low levels that had no impact on the final results. The sample results have been presented without blank corrections with the exception of tare subtraction required for the particulate analysis. All sample calculations of offgas concentrations were performed without blank or background correction.

5.4.3.2 Method 0050 Blank Train Assessment

A set of blank train samples was collected in conjunction with the four Method 0050 runs. The blank train samples exhibited similar results as the reagent blanks. There was no evidence of significant contributions to anion contributions in the sample results as a consequence of the sample train component preparation or handling.

5.4.3.3 Laboratory Control Sample and Matrix Spike Sample Assessment

Laboratory control sample percent recoveries indicate that the analytical process was in control. However, there were reduced recoveries of chloride in the matrix spike samples, due to apparent matrix effects. The other anions exhibit percent recoveries that are within target acceptance limits. Overall recovery of all of the target anions was sufficient to indicate that the data are useful for their intended purposes. The RPD results for both the LCS and the matrix spike samples indicate that a high level of precision is represented by this data.

6. PROCESS STREAM CHARACTERIZATION RESULTS

During the NWCF ETS off-gas emissions sampling activities, the NWCF ETS was being used to process a blend of two parts by volume of solution from INTEC Tank Farm Facility (TFF) vessel WM-184 and one part by volume of solution from INTEC TFF vessel WM-181. The campaign to process this blend was initiated on May 4, 2001 and continued through December 2001. At the same time the off-gas sampling was being performed, RCRA-quality liquid samples of NWCF ETS process streams were collected for analysis. These samples were collected under the protocols and QA/QC specified in sampling and analysis PLN-613 and PLN-407, the ALD QAPjP for environmental samples. These samples consisted of one each of the blended feed, condensed overheads, and concentrated bottoms. In addition, process samples of the feed were analyzed prior to initiation of processing the blend in the NWCF ETS to ensure that the chemistry of the feed solution was compatible with process equipment. Finally, samples of the condensed overheads and the concentrated bottoms from the first several batches processed were analyzed to ensure that the chemistry of those streams was compatible with down-stream process equipment. It should be noted that the non-RCRA samples were not analyzed per RCRA protocol; therefore limited QA/QC controls were evaluated.

These data obtained for the process streams may be used for component material balances around the NWCF ETS and are included in this report to provide a complete picture of the NWCF ETS and to provide a convenient location to obtain the data for subsequent system analyses. It should be noted that some limitations exist with this data. First, the INTEC Analytical Laboratory Department (ALD) that analyzed these samples has a more limited standard target analyte list for volatile organic compounds and semi-volatile organic compounds than the contract laboratory that analyzed the off-gas samples. The INTEC ALD TAL of volatile and semi-volatile organic compounds are contained in Appendix C. Second, some of the process samples (especially those taken to ensure compatibility with the NWCF ETS and down-stream equipment) were not taken at the exact same time as the off-gas samples. However, it is reasonable to assume that the process control system provides consistent batching of the feed streams and consistent control of the process variables. Third, the samples taken prior to initiation of the blend campaign, as well as those taken during processing the first several batches were only analyzed for a limited number of analytes. Since the purpose of these samples was to ensure compatibility between the solution chemistry and the process equipment, only those analytes that might challenge the envelopes of associated safety bases were targeted.

The results of the inorganic analyses of the feed samples are contained in Table 13, those results for the concentrated bottoms are contained in Table 14, and those for the condensed overheads are contained in Table 15. Organic compound analyses were only performed on one sample from each of the three streams; therefore, the organic analysis results for all three streams are contained in Tables 16 and 17. The INTEC ALD analytical reports for these samples are contained in Appendix C.

Table 13. Inorganic analyses of feed streams processed during NWCF ETS off-gas emissions sampling.

Analysis Log #:	0009272	0009274	0010022	00100415	0010164	0010167	0104103	0104125	0104142	0105062	0105063	0105112	0106071
Analysis, units:													
Sp. G.		1.1602	1.1549			1.1579	1.2220	1.2201	1.2409	1.1976			
Acid, N		1.564	1.596			1.633	1.842	1.823	1.854	1.781			1.711
Al, *M*		0.2209	0.2189			0.2127	0.526	0.537	0.521	0.451			0.42448
Sb, *M*													<0.000002
As, *M*													0.00000447
Ba, *M*													0.0000290
Be, *M*													0.0000105
B, *M*		0.0130	0.0134			0.0137	0.0076	0.0076	0.0082	0.00971			
Cd, *M*		0.00411	0.00426			0.00420	<0.000948	<0.000948	<0.000948	0.00156			0.00156
Ca, *M*		0.04376	0.04526			0.04684	0.01618	0.0163	0.0169	0.02528			
Cl, *M*		0.0179	0.0117			0.0117	0.0276	0.0278	0.02835	0.0226			
Cr, *M*		0.00275	0.00252			0.00284	0.00169	0.0017	0.0018	0.00194			0.00196
Co, *M*													0.00000283
Cu, *M*													0.0004244
F, *M*		0.08485	0.1365			0.8122	0.0291	0.0258	0.0260	0.0500			0.04351
Fe, *M*		0.0113	0.0121			0.0129	0.01422	0.0138	0.0149	0.0133			
Pb, *M*													0.0005369
Mn, *M*													0.007841
Hg, *M*		0.00198	0.00102			0.000603	0.000748	0.000633	0.000678	0.000613			0.000743
Ni, *M*													0.00113
NO_3, *M*		2.839	3.111			3.222	3.91	3.89	3.96	3.279			
PO_4, *M*													
K, *M*		0.821	0.124			0.127	0.0895	0.0880	0.0880	0.0987			
Se, *M*													<0.000003
Ag, *M*													0.0000011
Na, *M*		5.70	0.848			0.853	1.32	1.31	1.36	1.17			
SO_4, *M*		0.0316	0.0343			0.0385	0.0162	0.0087	0.0106	0.0288			
Tl, *M*													<0.000001
U, *M*			0.00032			0.00031	0.000185	0.000184	0.000168	0.000206			0.000209

Table 13. Inorganic analyses of feed streams processed during NWCF ETS off-gas emissions sampling.

Analysis Log #:	0009272	0009274	0010022	00100415	0010164	0010167	0104103	0104125	0104142	0105062	0105063	0105112	0106071
Analysis, units:													
V, *M*													0.000012
Zn, *M*													0.0006313
Zr, *M*		0.0053	0.0054			0.0053	<0.00278	<0.00278	<0.00278	<0.00279			
H-3, mCi/L	0.0158			0.0154	0.0126						0.0223	0.0219	
Co-57, mCi/L							0.01171						
Co-60, mCi/L		0.0705	0.0649			0.0627	0.01357	0.01710	0.01697				
Sr (total), mCi/L	20.4			24.28	20.69						6.76	16.7	
Cs-134, mCi/L		0.0705	0.0635			0.0646		0.00546	0.00555	0.0212			
Cs-137, mCi/L		25.8	26.1			26.2	12.8	14.24	14.38	19.4			
Eu-154, mCi/L		0.214	0.224			0.197	0.0299	0.0319	0.0324				
Eu-155, mCi/L		0.0484	0.0451			0.0451							
Nb-94, mCi/L		0.00316	0.00308			0.00373				0.00209			
Zr-95, mCi/L		0.0125	0.0115			0.0121				0.00477			
Sb-125, mCi/L						0.0368			0.130				
Am-241, mCi/L													
TIC,[1] µg/mL													<119
UDS, g/L													0.619

1. Total inorganic carbon.

Table 14. Inorganic analyses of bottoms streams during NWCF ETS off-gas emissions

Analysis Log #:	0105106	0106146	0106214	0106233
Analysis, units:				
Sp. G.	1.0747	1.3564		1.3036
Acid, N	2.559	2.868	1.741	2.830
Al, *M*	0.518	0.859	0.31256	0.711
Sb, *M*			0.0000128	
As, *M*			<0.000008	
Ba, *M*			0.0000216	
Be, *M*			0.0000067	
B, *M*				
Cd, *M*			0.00131	
Ca, *M*				
Cl, *M*	0.0226	0.02866		0.03732
Cr, *M*			0.001674	
Co, *M*			0.0000241	
Cu, *M*			0.0003003	
F, *M*	0.0466	0.0900	0.052775	0.0684
Fe, *M*				
Pb, *M*			0.0004164	
Mn, *M*			0.006174	
Hg, *M*			0.000568	
Ni, *M*			0.0009426	
NO_3, *M*	4.03	5.27		7.22
PO_4, *M*	0.003871	0.01399		0.01382
K, *M*	0.0159	0.129		0.154
Se, *M*			<0.000012	
Ag, *M*			<0.000004	
Na, *M*	0.505	1.56		1.91
SO_4, *M*				
Tl, *M*			<0.000004	
U, *M*	0.000247	0.000311	0.000261	0.0004357
V, *M*			0.000011	
Zn, *M*			0.000494	
Zr, *M*				
H-3, mCi/L	0.0108	0.0151		
Co-57, mCi/L				
Co-60, mCi/L	0.0352			
Sr (total), mCi/L				
Cs-134, mCi/L	0.0236			
Cs-137, mCi/L	21.2			
Eu-154, mCi/L	0.0904			
Eu-155, mCi/L				
Nb-94, mCi/L				
Zr-95, mCi/L	0.00528			
Sb-125, mCi/L				
Am-241, mCi/L				
TIC,[1] µg/mL			<119	
UDS, g/L	5.3	1.187	1.288	0.725

1. Total inorganic carbon.

Table 15. Inorganic analyses of condensate streams during NWCF ETS off-gas emissions

Analysis Log #:	0105061	0105073	0105087	0105092	0106145	0106221	0106241
Analysis, units:							
Sp. G.	1.0127	1.0121	1.0131	1.0131	1.0138		1.0130
Acid, N	0.467	0.450	0.476	0.480	0.498	0.514	0.471
Al, *M*	0.00108	<0.0008	<0.00042	<0.00075	<0.00042	0.00006312	<0.00042
Sb, *M*						<0.0000004	
As, *M*						<0.0000004	
Ba, *M*						0.000000066	
Be, *M*						<0.0000001	
B, *M*							
Cd, *M*						<0.00000004	
Ca, *M*							
Cl, *M*	0.004928	0.00485	0.005156	0.00525	0.005602		0.00539
Cr, *M*						0.00000052	
Co, *M*						<0.0000002	
Cu, *M*						<0.0000003	
F, *M*	<0.00041	<0.00037	<0.00037	<0.00037	<0.00018	0.0001791	<0.00018
Fe, *M*							
Pb, *M*						<0.0000004	
Mn, *M*						0.00000024	
Hg, *M*	0.0000229	0.0000189	0.0000186	0.0000115	0.0000274	0.00001969	0.0000163
Ni, *M*						0.00000055	
NO_3, *M*	0.4011	0.4198	0.02049	0.4233	0.4393		0.4007
PO_4, *M*							
K, *M*							
Se, *M*						<0.0000007	
Ag, *M*						<0.0000002	
Na, *M*							
SO_4, *M*	0.000153	0.000120	<0.00003	0.000112	0.000083		<0.000059
Tl, *M*						<0.0000002	
U, *M*	<0.0000014	<0.0000014	<0.0000014	<0.0000014	<0.0000014	<0.0000014	<0.0000014
V, *M*						<0.0000002	
Zn, *M*						0.00000081	
Zr, *M*							
H-3, mCi/L							
Co-57, mCi/L							
Co-60, mCi/L							
Sr (total), mCi/L							
Cs-134, mCi/L							
Cs-137, mCi/L							
Eu-154, mCi/L							
Eu-155, mCi/L							
Nb-94, mCi/L							
Zr-95, mCi/L							
Sb-125, mCi/L							
Am-241, mCi/L							
TIC,[1] µg/mL						<23.8	
UDS, g/L	none visible	none visible	none visible	none visible	none visible	0.0	none visible

1. Total inorganic carbon.

Table 16. VOC analyses of NWCF ETS streams during NWCF ETS off-gas emissions sampling.

Stream	Blended Feed		Bottoms		Condensate	
	Result	LQ	Result	LQ	Result	LQ
Analyte, units:						
TOC, µg/mL	608.462		754.99		147.853	
Chloromethane, µg/L	<10	U M	<10	U	<10	U
Vinyl Chloride, µg/L	<10	U	<10	U	<10	U
Bromomethane, µg/L	4	J	37	B M	160	E B M
Chloroethane, µg/L	<10	U	<10	U	<10	U
Trichlorofluoromethane, µg/L	<10	U	<10	U	<10	U
1,1-Dichloroethene, µg/L	<10	U	<10	U	<10	U
1,1,2-Trichloro-1,2,2-	<10	U	<10	U	<10	U
Carbon disulfide, µg/L	<10	U	<10	U	<10	U
Acetone, µg/L	9	J	<20	U Z	32	Y
Methylene chloride	<10	U	<20	U Z	<20	U Z
Trans-1,2-dichloroethene, µg/L	<10	U	<10	U	<10	U
1,1-Dichloroethane, µg/L	<10	U	<10	U	<10	U
Cis-1,2-dichloroethene, µg/L	<10	U	<10	U	<10	U
2-Butanone, µg/L	<10	U	<10	U	<10	U
Chloroform, µg/L	<10	U	<10	U	<10	U
1,1,1-Trichloroethane, µg/L	<10	U	<10	U	<10	U
Carbon tetrachloride, µg/L	<10	U	<10	U	<10	U
Benzene, µg/L	<10	U	<10	U	<10	U
1,2-Dichloroethane, µg/L	<10	U M	<10	U	<10	U
Trichloroethene, µg/L	<10	U	<10	U	<10	U
1,2-Dichloropropane, µg/L	<10	U	<10	U	<10	U
Bromodichloromethane, µg/L	<10	U	<10	U	<10	U
Cis-1,3-dichloropropene, µg/L	<10	U	<10	U	<10	U
4-Methyl-2-pentanone, µg/L	<10	U	<10	U	<10	U
Toluene, µg/L	<10	U	<10	U	<10	U
Trans-1,3-dichloropropene, µg/L	<10	U	<10	U	<10	U
1,1,2-Trichloroethane, µg/L	<10	U	<10	U	<10	U
Tetrachloroethene, µg/L	<10	U	<10	U	<10	U
2-Hexanone, µg/L	<10	U	<10	U	<10	U
Dibromochloromethane, µg/L	<10	U	<10	U	<10	U
Chlorobenzene, µg/L	<10	U	<10	U	<10	U
Ethylbenzene, µg/L	<10	U	<10	U	<10	U
M-xylene and p-xylene, µg/L	<20	U	<20	U	<20	U
O-xylene, µg/L	<10	U	<10	U	<10	U
Styrene, µg/L	<10	U	<10	U	<10	U
Bromoform, µg/L	<10	U	<10	U	<10	U
1,1,2,2-Tetrachloroethane, µg/L	<10	U	<10	U	<10	U
Tentatively Identified Compounds:						
Unknowns, number	1/10	J				

LQ = lab qualifiers (see Appendix C for definitions)

Table 17. SVOC analyses of NWCF ETS streams during NWCF ETS off-gas emissions

Stream	Blended Feed		Bottoms		Condensate	
Analysis Log #:	0106071		0106221		0106214	
	Result	LQ	Result	LQ	Result	LQ
Analyte, units:						
TOC, µg/mL	608.462		754.99		147.853	
N-Nitrosodimethylamine	<20	U M	36		42	
Pyridine	<20	U	<20	U	<20	U
Phenol	<20	U	<20	U	<20	U
bis(2-Chloroethyl)ether	<20	U	<20	U	<20	U
2-Chlorophenol	<20	U	<20	U	<20	U
1,3-Dichlorobenzene	<20	U	<20	U	<20	U
1,4-Dichlorobenzene	<20	U	<20	U	<20	U
1,2-Dichlorobenzene	<20	U	<20	U	<20	U
2-Methylphenol	<20	U	<20	U	<20	U
bis(2-Chloroisopropyl)ether	<20	U	<20	U	<20	U
3 & 4-Methylphenol	<20	U	<20	U	<20	U
N-Nitroso-di-n-propylamine	<20	U	<20	U	<20	U
Hexachloroethane	<20	U	<20	U	<20	U
Nitrobenzene	<20	U M	<20	U	<20	U
Isophorone	<20	U	<20	U	<20	U
2-Nitrophenol	<20	U	<20	U	<20	U
2,4-Dimethylphenol	<20	U	<20	U	<20	U
bis(2-Chloroethoxy)methane)	<20	U	<20	U	<20	U
2,4-Dichlorophenol	<20	U	<20	U	<20	U
1,2,4-Trichlorobenzene	<20	U	<20	U	<20	U
Naphthalene	<20	U	<20	U	<20	U
4-Chloroaniline	<20	U	<20	U	<20	U
Hexachlorobutadiene	<20	U	<20	U	<20	U
4-Chloro-3-methylphenol	<20	U	<20	U	<20	U
2-Methylnaphthalene	<20	U	<20	U	<20	U
Hexachlorocyclopentadiene	<20	U	<20	U	<20	U
2,4,6-Trichlorophenol	<20	U	<20	U	<20	U
2,4,5-Trichlorophenol	<20	U	<20	U	<20	U
2-Chloronaphthalene	<20	U	<20	U	<20	U
2-Nitroaniline	<20	U	<20	U	<20	U
Dimethylphthalate	<20	U	<20	U	<20	U
2,6-Dinitrotoluene	<20	U	<20	U	<20	U
Acenaphthylene	<20	U	<20	U	<20	U
3-Nitroaniline	<20	U	<20	U	<20	U
Acenaphthene	<20	U	<20	U	<20	U

Table 17. SVOC analyses of NWCF ETS streams during NWCF ETS off-gas emissions

Stream	Blended Feed		Bottoms		Condensate	
Analysis Log #:	0106071		0106221		0106214	
	Result	LQ	Result	LQ	Result	LQ
Analyte, units:						
2,4-Dinitrophenol	420	D M H	44	M	110	M
4-Nitrophenol	<20	U	<20	U M	<20	U M
Dibenzofuran	<20	U	<20	U	<20	U
2,4-Dinitrotoluene	<20	U	<20	U	<20	U
Diethylphthalate	<20	U M	<20	U M	<20	U M
4-Chlorophenyl-phenylether	<20	U	<20	U	<20	U
Fluorene	<20	U	<20	U	<20	U
4-Nitroaniline	<20	U	<20	U	<20	U
4,6-Dinitro-2-methylphenol	<20	U M	<20	U M	<20	U M
N-Nitrosodiphenylamine	<20	U	<20	U	<20	U
Tri-n-butyl phosphate				U		U
Azobenzene				U		U
4-Bromophenyl-phenylether	<20	U	<20	U	<20	U
Hexachlorobenzene	<20	U	<20	U	<20	U
Pentachlorophenol	<40	U	<40	U	<40	U
Phenanthrene	<20	U	<20	U	<20	U
Anthracene	<20	U	<20	U	<20	U
Carbazole	<20	U	<20	U	<20	U
Di-n-butylphthalate	<20	U	<20	U M	<20	U M
Fluoranthene	<20	U	<20	U	<20	U
Pyrene	<20	U	<20	U	<20	U
Butylbenzylphthalate	<20	U	<20	U	<20	U
3,3'-Dichlorobenzidine	<20	U	<20	U M	<20	U M
Chrysene	<20	U	<20	U	<20	U
Benzo(a)anthracene	<20	U	<20	U	<20	U
bis(2-Ethylhexyl)phthalate	<20	U	<140	U	<20	U
Di-n-octylphthalate	<20	U	<20	U	<20	U
Benzo(b)fluoranthene	<20	U	<20	U	<20	U
Benzo(k)fluoranthene	<20	U	<20	U	<20	U
Benzo(a)pyrene	<20	U	<20	U	<20	U
Indeno(1,2,3-cd)pyrene	<20	U	<20	U	<20	U
Dibenzo(a,h)anthracene	<20	U	<20	U	<20	U
Benzo(g,h,I)perylene	<20	U	<20	U	<20	U
Tentatively Identified Compounds:						
Unknowns, number identified/conc.	7/501	J	19/509	J	5/130	J
Tri-n-butyl phosphate					17	J

LQ = lab qualifiers (see Appendix C for definitions)

7. PROCESS OPERATING CONDITIONS

The NWCF ETS is operated as described in Section 2. The evaporator is initially filled with fresh waste solution. The temperature in the evaporator flash column, prior to initiation of stream is usually between 50 and 60°C. Steam flow is ramped from 0 to 1730 lb/hr in 15 to 45 minutes and then maintained for eight to ten hours until the desired solution density is obtained. Approximately 2 to 3 hours is required for the column to reach a full boil at around 100°C. Fresh feed solution is added to the evaporator until near the end of the batch. The temperature increases 3-4° throughout the batch as the concentration increases to the target density.

Offgas sampling at the beginning of the evaporator run was synchronized with the initiation of steam to the evaporator. Approximately 3 hours was needed to collect the offgas samples, including the SMVOC runs. This provided a representative average of the emissions during the startup period. SMVOC samples were actually started 15-20 minutes prior to steam initiation in order to capture any burst of volatile organic emissions on the onset of solution heating. Sample collection at the end of the evaporator batches was coordinated with the ETS operators in order to sample during the final 3-4 hours of the evaporator batch.

Process parameter data were collected during the NWCF ETS emissions sampling by the NWCF Distributive Control System (DCS). A history of key process variables was collected using fifteen-minute average data. The data were then tabulated for the times when the sampling was taking place. Appendix D compiles the process parameters for the sixteen sample collection runs.

The evaporator operated within normal operating parameters throughout the period of sample collection. The feed batches had very similar densities and temperatures, indicating very similar compositions. The total flow from the NWCF (containing the NWCF ETS emissions) was essentially constant limiting variation due to deposition or re-entrainment.

During the collection of sample train 0060-STRT-02, sampling was interrupted for an emergency drill while the evaporator batch continued. Sampling was interrupted from 0850 to 0922 on June 6, 2001 until sampling personnel were notified that they could continue. During this time, the average temperature in the evaporator increased from 76.4 to 97.4 degrees.

8. DQO ASSESSMENT AND PROJECT SURVEILLANCE

Data quality objectives (DQOs) for the NWCF ETS offgas emissions project are defined in the quality assessment project plan (QAPjP, company document PLN-879). Sample collection in the field was coordinated by the Project Technical Leads (PTL) with independent surveillance performed by the Project Quality Assurance Officer (PQAO). The sample collection activities were monitored by the PTL and PQAO, thus ensuring that the sample collection activities were completed in accordance with the test plan and QAPjP and that the samples were maintained under proper custody and conditions at all times. All changes to the test plan required advance approval from the PTL and PQAO prior to being implemented during sample collection. A standard field change form was used to document the approvals for these changes.

The services of the INEEL Sample Management Office (SMO) were not enlisted to review the analytical data. This was previously completed on the NWCF Calciner offgas emissions inventory, but was not within the budget constraints of the current project. Therefore, a cursory review of the analytical data QA/QC requirements was completed by the PQAO and is provided in lieu of the Limitations and Validation (L&V) reports that are provided by the SMO on previous projects.

8.1 Documented Field Changes

The QAPjP allowed for in-field changes to requirements of the QAPjP and sampling protocols as long as such changes were approved per Section 13.1 of the QAPjP. Also allowed by the QAPjP were properly approved changes to the sampling checklists. Seven field change forms capturing 11 different requested variances from the QAPjP or standard protocol were approved.

8.1.1 VOC Sample Collection

Method 0031 for VOCs still requires the storage of Tenax® and Anasorb-747® tubes at less than 10°C after tube conditioning, during transport, and up to the time of tube usage in sampling. This is a typical protocol deviation among current laboratory service providers, since it is deemed unnecessary in conjunction with the common practice of sealing the resin tubes in air-tight containers and using a trip blank to identify potential fugitive contamination that may occur prior to use of the tubes in the field and during their return to the laboratory. Conditioned sample media availability, schedule slippage, and laboratory technical guidance were critical factors in the project field decision to waive this requirement via a field change once it was determined that the laboratory had not complied.

The method requirement that conditioned media tubes not be exposed to severe pressure variations during transport is satisfied amply by the multiple layers of containment used by the contract laboratory providing the sample tubes. Therefore, in this regard, no field change was applicable. It should also be noted that all of the Tenax® and Anasorb-747® tubes were cooled to 0-10°C immediately following sample collection.

The initial intent of the contract sampling team was to not preserve aqueous samples collected for VOCs (Method 0031) by acidification with 8N HCl to a measured pH of < 2. The BBWI Project Technical Lead and the PQAO pointed out that it would be preferable to perform this standard EPA preservation protocol on such aqueous samples and on associated reagent water blanks. A field change to the sampling checklist reflecting that guidance was approved and sampling team was so instructed.

Another field change was proposed and approved to require another pair of Tenax®/Anasorb-747® tubes be collected as a field blank for the second day of Method 0031 sampling. The project had already varied in the QAPjP from the standard method requirement for a field blank every two hours of sampling based on the expected sampling period and reviews of cost /benefit and technical applicability of this QC-related method requirement to sample train operations, as scheduled.

The last field change related to the 0031 sample trains and protocols was one to keep the flowrates at or below 0.5 Lpm rather than going with the standard EPA Method 0031 upper limit of 1 Lpm. This allowed four sets of tubes to be ran in the 0031 sampling trains over a typical sampling interval meeting or exceeding the method target sampling time of 2 hours. This is compliant with the intent of Section 1.8 of the standard EPA SMVOC method.

8.1.2 SVOC Sample Collection

One field change form was approved specific to the Method 010 trains for SVOCs. This change incorporated a final field dilution of the condensate fractions from these trains from just under a total volume of 500 mL to a total volume of 1 liter. This reflects a dilution normally performed on the samples after receipt at the laboratory. By performing this dilution in the field under close supervision of the project tech lead and sample team leads, the project was readily able to comply with the 70 Bq/gram ceiling limit for shipping the associated SVOC samples in a non-radiological classification per DOT regulations.

8.1.3 SCS Trains and Screening

A field change was approved to allow for cancellation of a scheduled third radiological contamination evaluation train (SCS-EVAP-3), based on consistent and low radioactivity results obtained for all previous sample contamination trains and routine gamma counting screening that was performed in accordance with MCP-1173, *Package and Ship NWCF Offgas Emissions Samples Offsite for Analysis*, Revision 2.

8.1.4 Metals and Anions Sample Collection

No field changes were required for the metals and anions sample collection runs. All runs proceeded in accordance with the sample collection checklists and test plans.

8.1.5 Miscellaneous Decisions

A final field change capturing five different field decisions was processed and approved. Per QAPjP language, not all of the decisions under this field change were required by project planning documents to be documented by a field change. However, the PQAO and the PTL decided it would be a best management practice to well document these decisions, and this process was the most accommodating and represented a configuration management control mechanism totally internal to the project. The following change elements were approved on this change form.

Element1:

It was determined that the pH meters supplied by the sampling contractor and in the field for this project could not meet reasonable time to stabilization criteria. Based on this fact, a field decision was made by PQAO and PTL to allow the samplers to do all pH measurements with pH paper versus requiring a meter. This was facilitated by the fact that in-field neutralizations of liquid sample fractions was not necessary as in the emissions inventory for

the NWCF Calciner. Approval was given at beginning of sample collections for the use of indicator paper for pH measurements in NaOH impinger sample fractions due to the harsh effects of the high pH.

Element 2:

This documents and certifies the assumption made early in project that the oxygen monitor readings of the sampled gas stream basically reflected the concentration of oxygen in ambient air. This assumption was used to relax standard EPA method calibration protocols and was already allowed by the QAPjP.

Element 3:

In conjunction with Element 2 above, it was decided to use oxygen cylinders already in inventory and marked as 20.8% O_2 rather than secure standards as cited in 40 CFR 60. In an associated decision, it was determined that for this project, the percent drift determinations would be made over time lines comparable to the actual train run times versus the 24-hour comparison baselines found in the 40 CFR 60 regulations which were inferentially tied to continuous monitoring.

Element 4:

Similar to Element 3 above, two other decisions related to the operation of the "continuous emissions monitoring system (CEMS)" monitors were made before inception of sample collections. First, use of a non-heated Perma-Pure® dryer to condition sample stream was authorized. Second, a rotameter with a 0 – 0.8 Lpm range was selected for use with the O_2 monitor. This resulted in a target flowrate of 0.75 Lpm rather than the 1.0 Lpm cited in the standard method.

Element 5:

Typical condensate recoveries from Method 0050 and Method 0060 trains were much less than 1.0 ml. The condensate and knockout (KO) rinse was added to impinger K1- K2 contents and rinses. This was per approved checklists. Additionally, for VOCs, the condensate fraction was topped to fill a 20-ml standard VOA vial and acidified with 8N HCl to a pH of <2. Reagent water blanks for VOCs analyses were processed in same fashion as 0031 condensates. In retrospect this decision element is redundant to other field changes already processed.

8.2 Data Quality Indicators

As of this point, all post-laboratory data evaluations for achievement of qualitative objectives and for quantitative data quality indicator acceptance criteria have been performed by the PTL and the PQAO. With the exception of a final evaluation of inter-train precision based on calculations of RSDs associated with results of surrogates from all trains for VOCs and all trains for SVOCs, the data quality indicators presented in the QAPjP have all been evaluated.

Reviews of analytical reports indicated that method performance and associated QC, as depicted in the lab reports, met analytical method and project planning document requirements, with a few instances of failures to meet individual QC criteria. The results for the vast majority of

associated QC data meet QAPjP criteria and support current designated project uses of this data. As stated, an independent analytical data validation to the cited Statement of Work (SOW) requirements found inER-SOW-156, *INEL Sample Management Office (SMO) Statement of Work for Inorganic & Miscellaneous Classical Analyses*, Revision 1, ER-SOW-169, *Statement of Work for Organic Analyses Performed for INEL Sample Management Office*, Revision 0, or in associated standard analytical methods has not been performed. A full data validation process could potentially lead to additional data qualifications based on standard methods or cited SOWs.

8.3 Sampling Documentation Reviews

As in past emissions tests conducted for the NWCF Calciner, all field sheets related to sample collections were reviewed in the field as the sampling proceeded. Reviews were conducted by both the PTL and by the PQAO, and were completed to schedule per the QAPjP. Minor omissions or errors in field-level paperwork were therefore immediately caught and corrections were implemented while the sampling team was still in the field, and/or, if deemed necessary, so that re-sampling could occur with minimal delays or additional costs. Most observations that required corrective actions involved the accuracy or completeness of field data forms, and these instances were actually infrequent with respect to the sheer volume of field data entries required for the project.

All data were manually recorded in the field into the associated logbooks, sample data sheets and sampling checklists associated for each sample train type used during project sample collections. The data on sample data sheets were then uploaded into laptop computer templates of these same respective forms. There were some observed anomalies between some of the field definitions on the paper copies versus those on the electronic templates. These were noted in the individual internal PQAO reports to the PTL during each train type (0031, 0030, 0050, 0060) testing period. The sampling contractor (SAIC) made accommodations in each case by either giving more specific instructions to the sample collectors regarding the required entries on the paper forms, or by changing appropriate entry fields in the electronic templates. All changes were reviewed and approved in the field as required by the QAPjP.

As a result of reviews of the field-level documentation, it was discovered that the sample collectors had noted that sample #3411, Set#1 Anasorb-747® tube for Train 0031-END-1 had a crack at one end. Subsequent reviews of the laboratory entries into the related chain-of-custody forms did not indicate that this condition was noted by lab personnel on receipt of the samples. The laboratory analytical results appear consistent with other corresponding Anasorb-747® results and meet the necessary surrogate and internal standard recoveries.

Reviews of calibration documentation for associated sampling equipment identified no deficiencies with respect to requirements. Reviews of chain-of-custody and request for analysis forms identified no deficiencies in those documents.

8.4 Records Management

Records associated with this project have been retained and filed in an approved secure central file location (CFL) per company records management requirements. Project records have been categorized and dispositioned as environmental records and are currently assigned a permanent retention period. Per the project QAPjP and related company requirements and procedures for the designation and management of quality records, the following records have been further characterized as quality records:

- Quality Assurance Project Plan (QAPjP)
- Test Plans
- Logbooks
- Certificates of Analysis
- Calibrations
- Field Data Sheets
- Field Changes
- COC/RFA
- Analytical Data and Emissions Calculations Spreadsheets
- QA Reports
- Limitation and Validation Reports (not applicable yet for this project phase)
- Final Reports

Some of the above records are in paper form, some in electronic format, and some in dual media. All are stored appropriately in locked cabinets and controlled key access within the designated CFL. A file index has been prepared for these project records, and is available at the CFL. All records in CFL have been assigned appropriate INEEL uniform file codes in compliance with associated company procedures for management of files and records.

8.5 Review of Spreadsheet Calculations

As part of their contracted services, the sampling contractor provided spreadsheets which captured all appropriate field sampling data, analytical data, and project-required plant operations data, and which calculated from this data estimated total emissions rates from the NWCF ETS. As referred to elsewhere in this report, these estimates are conservative contributors to the emissions related to the operation of the ETS itself because other sources of miscellaneous plant tank operations continuously emit purge and/or vessel sparging gases to this same NWCF offgas line.

The first line of independent review and QC of these contractor spreadsheets occurred internal to the contractor. A second 100% review was conducted by the PTL, with any required corrections being implemented in conjunction the contractor for sake of configuration management and documenting general agreement with changes. Lastly, the PQAO reviewed in excess of 20% of the resultant pertinent entries after each iteration of changes. This comprehensive and iterated approach exceeded the basic requirement of the QAPjP that the PQAO verify only 20% of all entries and resultant calculation values. Once the sampling contractor lead, PTL, and PQAO were in agreement with the acceptability of the spreadsheets, the spreadsheets were noted as verified and released to be used on final report compilations.

8.6 Analytical Results

8.6.1 Data Reporting and Flagging

The QAPjP, associated task order statements of work, and technical lead guidance to the analytical laboratory defined project-specific requirements for data flagging, assignment of "<" symbols, and selection of most conservative and technically defensible result values for purposes of inserting conservative (high-biased) estimators of emissions rates for each identified compound into the emissions calculations. These requirements were in addition to the standard method-related data qualification flagging, and derive from the following EPA guidance documents:

- *EPA 1998a, Guidance on Collection of Emissions Data to Support Site-Specific Risk Assessments at Hazardous Waste Combustion Facilities, EPA530-D-98-002, August.*
- *EPA 1998b, Human Health Risk Assessment Protocol for Hazardous Waste Combustion Facilities, EPA530-D-98-001A, July, Appendix A-1, Table A-1.*

Rule 1. When there was a non-detect below the MDL in a train fraction for a given compound, then the lesser of the RDL or the RL was used.

Rule 2. When the laboratory RL is greater than the RDL, and a compound was detected above the MDL in a train fraction, but the result was less than the RDL, then the RDL was used.

Rule 3. When the RL is less than the RDL, and a compound was detected in a given train fraction above both the MDL and RL values, but less than the RDL, then the RDL was used.

Rule 4. When the RL is less than the RDL, and a compound was detected above the MDL, but result was less than the RL, then the RL was used (not the RDL).

Rule 5. Any compound that was detected above the RDL was used for the risk calculation applications and no "<" ("less than") sign was assigned for that result in the respective train fraction.

Rule 6. When a result for a SVOC or VOC target compound in a given train fraction was greater than MDL, but less than the RL, and result was assigned an estimated flag, the "<" flag was also assigned.

Rule 7. Whenever a "<" flag was assigned to any given train fraction result, then the "<" flag propagated to the train total for that compound, unless it was dropped due to protocol of rounding to significant figures in the train total summation process. (ASTM E29-93a 1999).

Rules 2 and 5 default to the RL, not the RDL, when the RL is less than the RDL, and the "hit" was less than the RL. This was justified since the RL is a statistically established conservative RL, established by the analytical laboratory. Therefore, team assessed uses of RL value for risk calculations as a justified approach.

Most of the lab-assigned data qualifier flags are based on lab methods and procedures, and are standard to a large majority of environmental services laboratories. For metals analyses, the QAPjP required "B" flags to be assigned to metals results greater than MDL but less than the Reporting Limit.

Additionally, a system of assigning project flags "P", "N," and "A" to train total results was developed to evaluate the significance of each given target analyte result for the complete sampling train based on the relative occurrence of real hits for the various train fractions that comprised each sample train. The "P" indicated that related compound was detected in some train fractions, but not all. The "N" indicated that there was no positive detection in any train fraction for that compound. Lastly, the "A" flag on the train total result indicated that the compound was detected in all of the train sample fractions.

8.6.2 Blank Corrections

Blank corrections for metals trains are allowed by the cited EPA guidance documents and standard air sampling methods. Reagent blank corrections were only made where actual hits occurred in the reagent blanks.

The performance of the SMVOC blank sample indicated that residual acetone and methylene chloride was present in the sample collection line connecting the probe to the train setup. The resulted from failure to adequately purge the sample collection line following collection of the SVOC samples which involves rinsing the line with a mixture of acetone and methylene chloride. The VOC results showed a rapid decay of acetone and methylene chloride in successive sample fractions. In spite of the fugitive contamination (which was included in the emissions inventory), volatile species emissions were very low; therefore, this problem is not considered a significant limitation of the data set. In order to correct this anomaly, it is recommended that a separate VOST probe always be used to collect the SMVOC trains. In the present inventory, the Project Technical Lead authorized the SVOC Method 5 probe for the SMVOC runs to reduce the risks associated with insertion and removal of a second probe into the NWCF offgas duct.

8.6.3 Data Reporting

Data reporting from laboratory was comprised of Certificates of Analysis, EDDs, and actual final reports which included complete data packages constructed to the lab's data package level equivalent to the INEEL Tier 1 reporting requirements. The INEEL internal documents that prescribe these data package expectations are ER SOWs -156 and -169. These reporting requirements were meant to allow for later validation of data should project management decide to subject this data to either a Level A or a Level B data validation per existing INEEL Sample Management Office procedures. Such a future validation decision might be made based on further identified uses of data or other criteria such as permit support, operational changes, planned facility modifications, etc.

8.6.4 Analytical QC

8.6.4.1 MS/MSD and LCS/LCSD Samples

Although analytical performance is treated in Section 5 of this report, there are some laboratory related QC aspects of results which need to be discussed in this section. The first QC topic area deriving from QAPjP relates to the selection and analysis of matrix spike samples and matrix spike duplicate samples, as well as the alternative approach of analyzing laboratory control sample spikes and duplicates.

The structural configuration of these EPA standard methods air sampling trains and non-homogeneity of matrices present in the various train sample fractions collected from the trains make traditional application of matrix spikes, matrix spike duplicates, and even sample splits very difficult. Splitting of sample fractions for analyses to calculate precision estimators obviously raises associated detection limits for those trains. Simultaneous or sequential operation and sample collections from two or three complete trains in order to derive estimates of precision and accuracy can quickly become very expensive and time consuming.

For this project, the PTL and contract laboratory project manager determined that either MS/MSDs or LCS/LCSDs with surrogate spikes would be utilized by analytical lab for various analyses. These associated surrogate spikes and acceptance criteria are listed in Table 3-1 of QAPjP. The RPD and percent recovery of these spikes were determined and provided by the contract laboratory. Evaluation of these data quality indicators was then accomplished later by the project team, using the criteria found in QAPjP Table 3-1.

The approach taken by laboratory for SVOCs was to analyze a front-half Composite LCS/LCSD and a back-half composite LCS/LCSD. For the aqueous matrices associated with 0010 trains, not only was a LCS/LCSD pair analyzed, but the lab also performed a 3-way split of the condensate and impinger contents for Run 2, using two of the split fractions to develop a MS/MSD pair. This allowed for generation of important matrix-specific information, but also tripled the detection limits for the non-QC sample aliquot. This is also discussed to a degree in Section 5.

Additionally, the XAD-2® tubes utilized in SVOC sampling were pre-spiked with 200 µg of a $^{13}C_3$-Naphthalene sampling surrogate. The determined recoveries of this surrogate were evaluated later in the project, and are discussed in Section 5 of this report.. Application of this labeled surrogate occurs prior to sample train operation and is a comprehensive estimator for the overall accuracy of surrogate application, collection method, laboratory sample prep, and analytical method. Additionally, recovery result is an indicator of potential losses of surrogate (or other SVOCs) or sample media cross-contamination occurring during shipments of same media to field or during shipment of collected samples back to the lab. All of the recovery results for this labeled sampling surrogate were in control.

With regard to VOC analyses of 0031 train samples, the same approach was taken, except that the QAPjP listed the recovery surrogates typical to Method 0031 and the following matrix spike compounds: 1,1-dichloroethane, trichloroethane, benzene, toulene, and chlorobenzene. These were selected with technical guidance from the INEEL SMO and reflect a subset of the standard surrogates used in the laboratory method which implements SW-846 Method 8260B. No spikes of the Tenax® media prior to sample collection were required. Again, acceptance criteria for these data quality indicators related to precision in accuracy were presented in QAPjP Table 3-1. The analytical report from the lab does not discuss results for such a LCS/LCSD. This may be a potential project-specific deficiency in the VOCs analyses unless additional data are located in the raw data packages.

For the Method 0060 metals trains, performance of post digestion spikes in accordance with EPA Method 6010B was an authorized approach. Additionally, for mercury, the QAPjP specified a MS/MSD pair. All associated acceptance criteria in terms of RPDs and percent recoveries were given in QAPjP Table 3-1. Again, for the metals train configuration there is no technically representative way to pre-spike train fractions before sample collection. As of time of this report, PQOA has not confirmed that lab reported associated LCS/LCSD results required by QAPjP.

Given the complexities of these matrices, the project team chose not to define sample fraction selection criteria or required frequencies of MS/MSDs to the lab in the QAPjP. Ongoing technical

consultations between the analytical lab and PTL determined the exact approaches which were taken in this regard for MS/MSD and LCS/LCSD analyses. They are included in the Requests-for-Analysis that were included in the Task Order Specific (TOS) Statement of Work (SOW) for sample analysis.

8.6.4.2 Performance for Internal Standards and Surrogates

Results for internal standards and surrogates for the VOCs analyses appeared to be acceptable based on QAPjP criteria. One outlier was Anasorb tube sample #3364 where results were non-usable. Some difficulties were encountered in recovery of the internal standard perylene-d_{12}, one of the six internal standards for the 8270C analysis of the SVOC samples. In order to obtain acceptable recovery of this standard, it was necessary for the analytical laboratory to dilute the samples. This increased the detection limits for the reference target analyte species. A more complete discussion on this anomaly is provided in Section 5 and the STL Final Analytical Report (STL 2001).

In summary, all QA/QC criteria meet the data quality objectives with only two notable exceptions. First, there was some difficulty in recovering perylene-d_{12}, one of the six internal standards used by the contract analytical laboratory for the Method 8270C SVOC analysis. The project used a trial XAD-2® to determine that the performance based QA/QC indicators would likely be achieved without modifications to the sample collection or analytical procedures. Thus, the poor performance of perylene-d_{12} was not expected. It was necessary to dilute the final sample volume using methylene chloride (the same organic solvent that is used to extract the samples from the sample collection media) and then to "re-shoot" the sample with the GC/MS instrument. Dilutions of 10-100 times were needed to achieve acceptable recoveries of the perylene-d_{12} standard. The implication of this result is that a few of target SVOC analyte data can only be considered an estimate, although the data are still usable for the emission inventory. This should not be considered a serious limitation of the data since all of the SVOC target analytes were typically less than the laboratory RL. In order to avoid this problem in future evaporator emissions testing, it is recommended that successive 1 mL samples be withdrawn from the sample solution during concentration (i.e., "blowdown') of the methylene chloride extraction solvent. This should be completed for the first run to determine the maximum concentration that is possible without failing to meet the specified internal standards recovery efficiencies.

Second, surrogate compound recoveries for one Anasorb® tube (A-3364 in Run 0031-STRT-1) failed to meet the acceptable recovery range. The results of the three corresponding Anasorb® tubes for this run were averaged and substituted for this tube. Surrogate performance and internal standard performance for all other Tenax® and Anasorb® tubes was generally excellent; therefore, the quality of the four SMVOC runs provide an accurate measurement of the target VOC analytes. Thus, this limitation did not significantly impact the run results. The run total was comparable to the results for the other 3 SMVOC runs.

8.7 Request for Analysis and Chain-of-Custody Forms

The analytical services laboratory used for this project utilized a system of pre-printed labels for samples based on a predetermined master sample list, in conjunction with "Request-for-Analysis" (RFA) and COC forms. This system greatly minimized chances for sample identification errors during the sample collection process. This is critical when there are multiple sample fractions for each train, many of which must be accurately combined either in the field or at the laboratory after sample receipt and log-in.

Reviews of closed out COC forms indicated only one instance of receipt of a shipping container without all container seals being intact. That occurrence was for the final probes rinses collected on June 25, 2001. There were otherwise no indications of any sample abnormalities observed for any sample receipts by the lab. All shipments of samples for analysis for organics arrived within acceptable temperature ranges per EPA criteria for sample preservation. Per the standard EPA methods, samples from 0050 and 0060 trains were not cooled during or prior to shipment.

8.8 Field Assessments by PQAO

In adherence with the QAPjP requirements for field assessments of sampling activities, surveillances/assessments were conducted for a single complete train run from each type of sample train used during the testing period for the NWCF ETS emissions. As a result some field changes processed, and corrective actions were taken in the field whenever necessary. There was no necessity per company procedures to initiate any forms for potential discrepancies or nonconformance reporting. Corrective actions were facilitated in the field during the respective sampling period.

Multiple types of checklists were utilized. Some criteria were based on the sampling protocol checklists themselves, while others dealt with good lab practice and work-site housekeeping. Housekeeping and lab practices ranged between acceptable to exemplary. These aspects were very important to this project given the spatial constraints of the sample collections area, rapidity of work schedule, and the multiple tasks occurring within the associated work hoods. Importance ranged from quality to safety, spill prevention, waste management, and effective radiological controls.

Field observations by the PQAO of the sampling team use of pH meters supplied by their company to perform pH measurements on project samples exhibited a failure of these meters to perform adequately with regard to stabilized readings in the buffered calibration standards or project samples. The PQAO, PTL, and SAIC sampling team lead agreed that substitution of pH indicator paper for all field pH measurements had adequate accuracy. This was facilitated by the fact that no sample neutralizations were required for this project phase. The section of this report dealing with field changes also discuses these points.

For this project, it was technically determined prior to inception of field activities that CEMS was not required to monitor the same miscellaneous gaseous emissions components that were a concern when the NWCF Calciner was running and being tested for emissions. In the past these emissions parameters included O_2, CO_2, CO, NO, NO_2, HCl, CH_4, SO_2 and total hydrocarbons (THC) and these derived from the aspects of feed to the Calciner and the physical presence of combustion products in the NWCF Calciner process. HCl emissions of ETS were evaluated using the results of the samples collected from the scheduled Method 0050 trains. For this project, dynamic monitoring was considered to be of technical value only for O_2 emissions. Additionally, it was predicted that the oxygen levels would be extremely close to those of ambient air. The monitored results from O_2 monitor throughout sampling campaign did actually reflect that oxygen concentration levels in the sampled offgas were essentially the same as ambient air concentrations of O_2.

Latitude was built into the QAPjP regarding the operation and the calibration of the O_2 monitor. Relief was given from the regulatory (40 CFR 60) requirements for the associated calibration gases, % Drift measurements, calibration frequency, etc. Additionally, the technical applications to associating the O_2 levels with fairly short interval sample train runs, versus the usual regulatory application of 24-hr continuous monitoring, justified the relaxed protocol. It was determined that an appropriate calibration frequency for this monitor was that the calibrations must

occur prior to and after each test period, but not to exceed 24 hours between calibrations. Requirements were adequately implemented in the field. As part of the assessment of the operation and calibrations of O_2 monitor it was documented that samplers were misinterpreting one entry associated with the documenting of % Drifts for this monitor. They were appropriately instructed in correct completion of the calibration sheets, and no further problems were observed.

9. OFFGAS EMISSIONS AND HEALTH RISK

Species emissions rates were calculated for all target analytes and tentatively identified compounds emitted from the NWCF Evaporator Tank System. Data for the train totals listed in Appendix A and the field sample collection data listed in Appendix B were compiled in an Microsoft Excel Program spreadsheet to compute both emissions rates [g/s basis] and offgas concentrations [μg/dscm basis], relative to conditions in the NWCF offgas duct where sampling was performed. Both the emissions rates and offgas concentrations summary sheets are included in Appendix B. Only a limited interpretation of emissions trends and potential risk to public health has been made at this time.

9.1 Emissions Rates and Trends

It was postulated that the release of organic compounds and volatile mercury present in the tank wastes would be higher at the start of the batch when the evaporator is filled with fresh feed. Conversely, it was hypothesized that metals emissions rates would increase with the density of the evaporator contents since the mechanism for non-volatile metals is primarily attributed to aerosol entrainment. Evolution of the organics, however, especially the semi-volatile organics, is a function of the evaporator temperature.

Figure 6 shows the average evaporator vessel temperature during a typical Method 5 sample collection period at the start and the end of an evaporator batch. The temperature was initially lower at the start of the run when steam to the heating coils was initiated. The temperature gradually increased, reaching the desired operating temperature of approximately 100°C at around 130 minutes-almost 3/4 through the first sampling period. Fresh feed to the evaporator was not increased significantly until the evaporator temperature reached the boiling temperature. The sample collected at the end of the evaporator run was performed when the evaporator vessel was at the peak temperature. At this time, feed was continually being supplied to maintain a constant volume in the evaporator. The volume of waste solution fed to the evaporator during the final three hours of the batch varied, but was approximately equal to ½ of the evaporator batch.

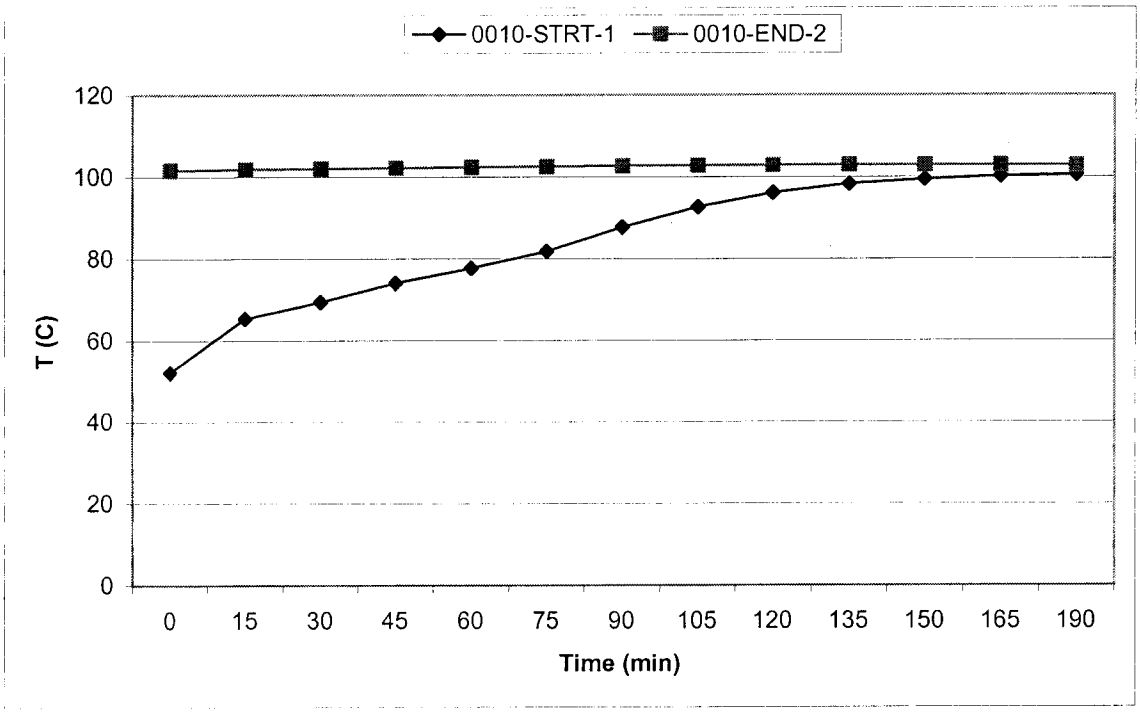

Figure 6. Average evaporator vessel temperature comparison for SVOC runs at the start and end on the evaporator batch.

9.1.1 Organic Compounds

Figure 7 plots the concentration of the 20 highest VOC compounds emitted from the evaporator. There are surprisingly small differences in the emissions rates at the beginning and end of the evaporator batch. The single highest volatile organic detected was dodecane, which was not a target analyte, but was reported as a tentatively identified compound. On a volumetric basis, the concentration of dodecane was only 54 ppbv. Acetone emissions were also relatively high, but still were in the low parts-per-billion range (*i.e.*, 30 ppb maximum). Some of the other volatile organic measurements were actually higher at the end of the batch, although the results were near the method detection limits and were susceptible to some process variations and sampling uncertainty at these lower levels.

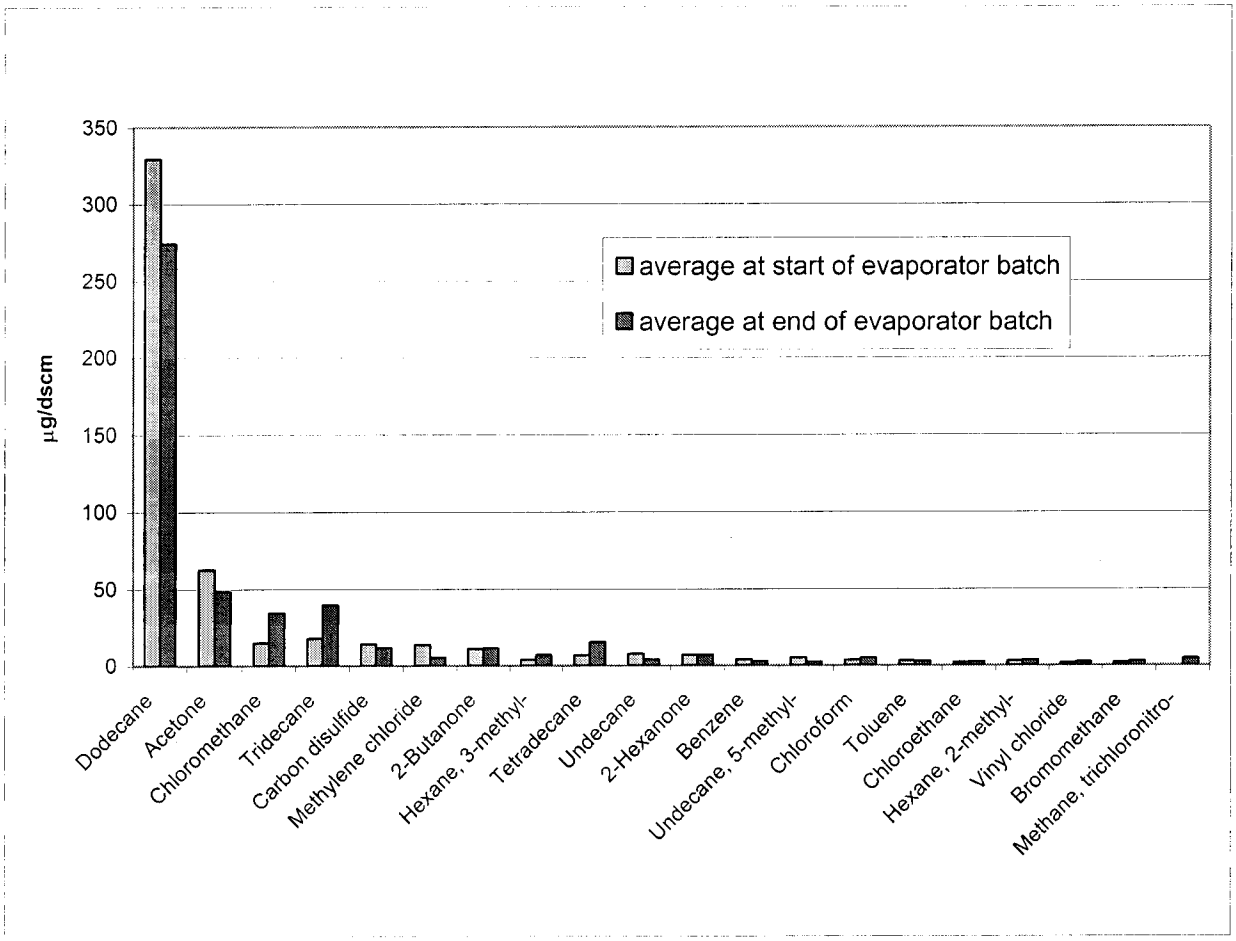

Figure 7. Comparison of volatile organic emissions at the beginning and end of evaporator batches.

The top 20 SVOCs measured in the offgas stream are plotted in Figure 8. Semivolatile organic compounds also appear to be only slightly higher at the start of the evaporator batch. Benzoic acid (a target analyte) and benzaldehyde (a tentatively identified compound) were the two most prevalent semivolatile organics emitted during operation of the NWCF ETS. The maximum emissions concentrations for benzoic acid and benzaldehyde were 310 ppb and 80 ppb, respectively. On a volumetric basis, the sum of all volatile and semivolatile organics is less than 1 ppm. All other SVOCs measurements are near the method detection limits for the respective species.

With the exception of benzoic acid, all of the SVOC species emitted from the evaporator were also detected during the NWCF Calciner offgas emissions inventory (Boardman 2001). Nearly all of the compounds are derivatives of benzene or other cyclic compounds and are possibly the products of incomplete combustion of the kerosene used to heat the Calciner. These compounds probably entered the tank system when Calciner scrub was recycled to the tank farm. It is further postulated that benzoic acid and benaldehyde were either formed during combustion of the kerosene or they were formed by oxidation of benzene and toluene in the acidic waste solutions. Relatively higher emissions of benzoic acid can be explained by noting that it is readily stripped from waste solutions by steam.

In summary, the rate of organic emissions at the start and end of the evaporator batches were not significantly different. This phenomena is attributed to the trade off between evaporator temperature and the volume of fresh waste solution fed to the evaporator during the respective sampling periods. The hourly total emissions rate for all volatile and semivolatile organic emissions was less than 0.02 lbs/hr. This is significantly less than the 3 lbs/hr limit that is generally considered significant for RCRA waste treatment units permitting decisions.

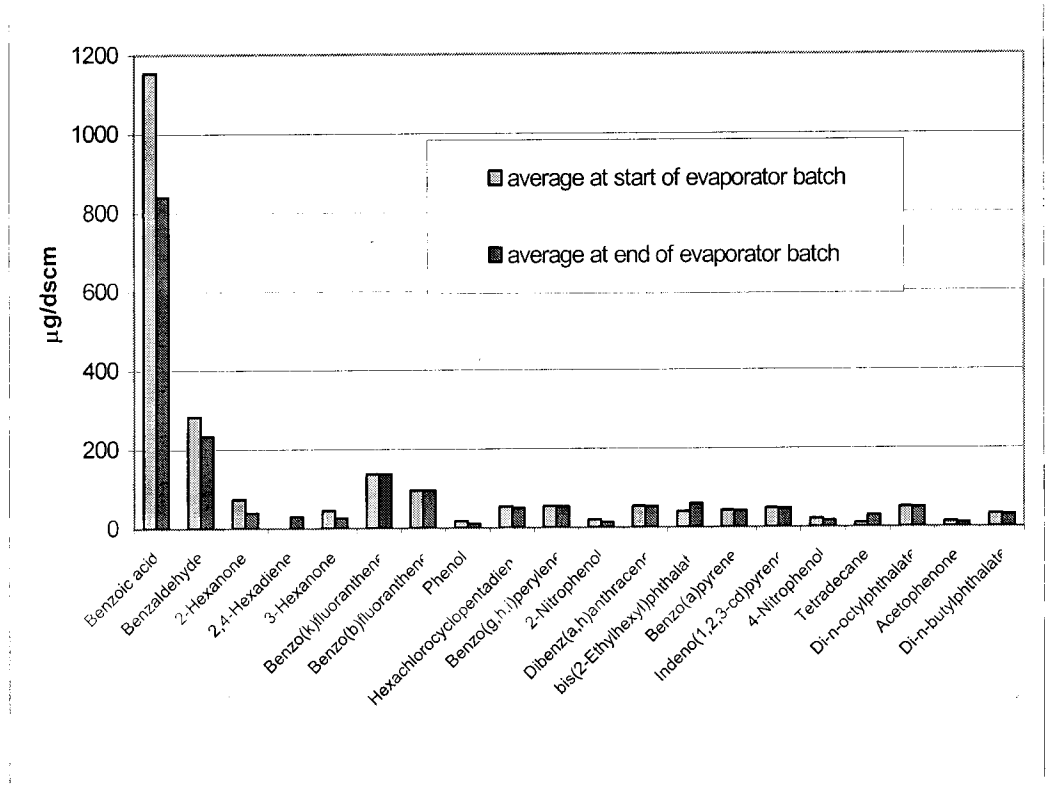

Figure 8. Comparison of semi-volatile organic emissions at the beginning and end of evaporator batches

9.1.2 Inorganic Compounds

The average metals emissions rates at the beginning and end of evaporator batches are plotted in Figure 9. As anticipated, metals emissions, including mercury, were typically higher at the end of an evaporator batch when the evaporator solution reached its maximum density. Assuming aerosol droplet entrainment with the overhead gas was constant throughout the run, then the emissions of all nonvolatile species should correlate with the solution density. The exception is mercury. If volatile elemental mercury exists as a dissolved gas in the waste solutions, then it would tend to be volatilized at the beginning of the evaporator runs. Otherwise, if the mercury is complexed or speciated in the wastes, then it would tend to be emitted as a non-volatile entrained species. These data indicate that mercury was mainly emitted as non-volatile particulate, although no speciation was attempted to distinguish elemental versus oxidized forms of mercury in the effluent gas stream. Aluminum, manganese, and zinc emissions appear to correlate with their relative abundance in the evaporator feed and bottoms. The emissions of all other metals were relatively low, as were their concentrations in the feed.

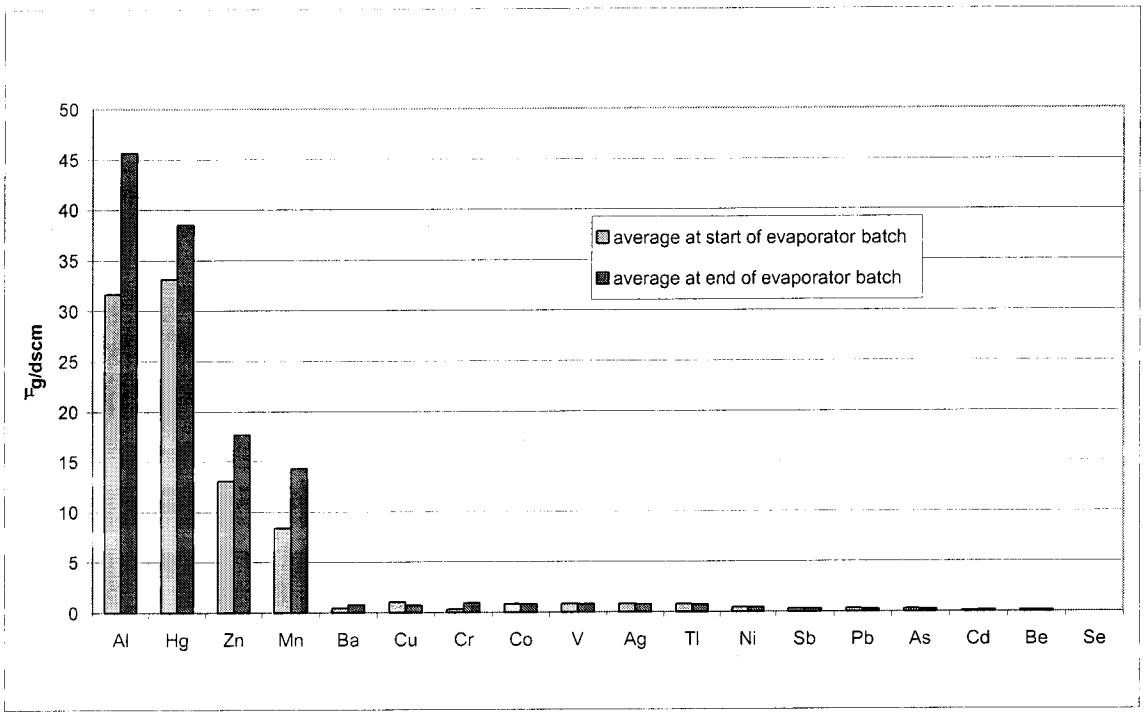

Figure 9. Comparison of metals emissions at the beginning and end of evaporator batches (not including final probe rinse species apportionment).

Throughout the sampling period, it was necessary to leave the 12-ft Method 5 sample collection probe at a fixed position in the offgas duct to reduce the potential for contamination spread and personnel radiation exposures. The probe was removed at the end of the 3-week sampling period and rinsed with acetone, followed by nitric acid, to obtain a final probe rinse measurement of particulate and metals absorbed on the probe's glass liner. Approximately 93 dscm of offgas sample was drawn through the probe over the duration of the offgas emissions inventory. The apportioned amount of particulate and metals for a single run is thus roughly 3/93 [dscm/dscm] or 3.2% of the total particulate and metals mass measured in the final probe rinse. Thus, 3.2% of the particulate and metals detected in the final probe rinses should be apportioned to the run averages.

The difference between the four most abundant metals detected in the offgas and the apportioned amount in the final probe rinse, relative to the average emissions was <10% for Zn, <6% for Al, <0.5% for Mn, and <0.1% for Hg. The percent of apportioned probe mass for the minor species was also typically low, although a comparison of the results is skewed by the fact that the measurements are near or below the analytical method detection limits. In conclusion, these results indicate that the metals uptaken on the probe liner were insignificant with respect to obtaining an accurate emissions inventory for the target metals species.

Total particulate and chloride emissions rate averages at the start and end two evaporator batches are illustrated in Figures 10 and 11. There were relatively small differences in the chloride emissions at the start and end of the batch. Hydrochloric acid levels are significantly higher as expected. Still, the sum of chloride emission contributions from HCl and Cl_2 is less than 1 ppmv.

Particulate emissions follow the trend of the semi-volatile organic species which were slightly higher at the beginning of the batch. Figure 11 also compares the apportioned particulate measurement for the final probe rinse (*viz.*, 3.2% of the final probe particulate measurement as discussed above). The relative amount of particulate absorbed on the probe was 20-25% of the train total. It can be inferred that some SVOCs were also deposited on the probe liner, with the maximum being similar to the particulate. This fact should be taken into consideration when using the SVOC emissions rates.

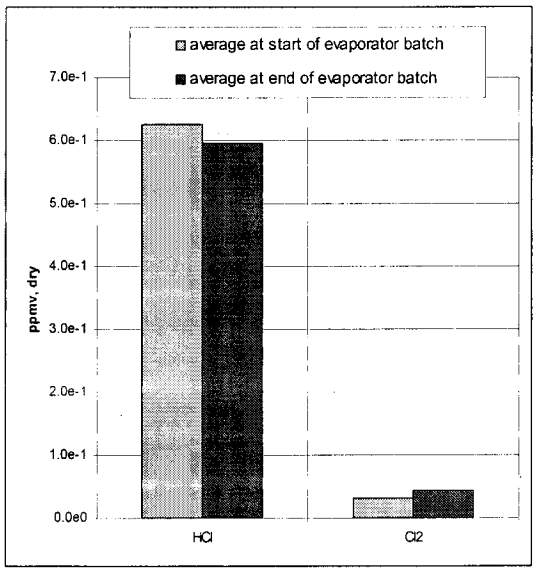

Figure 10. Comparison of chloride emissions at the beginning and end of evaporator batches.

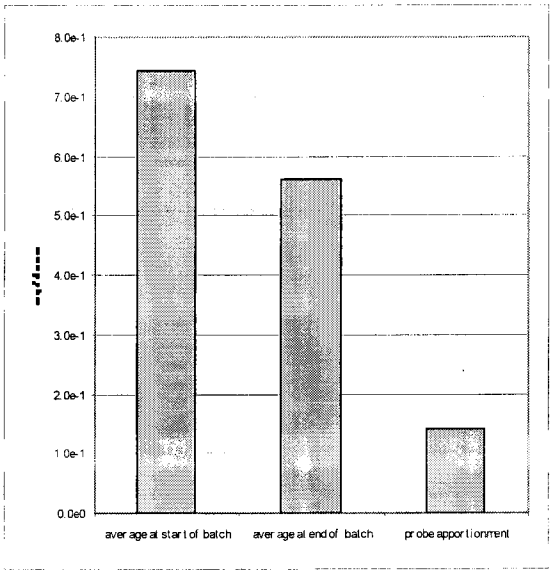

Figure 11. Comparison of particulate emissions at the beginning and end of the evaporator run with probe particulate apportionment.

9.2 Emissions Health Risk

The emission rates of hazardous air pollutants from the NWCF ETS were used to calculate risk to human health. Pollutants from the NWCF ETS are released from the same point and under the same conditions as NWCF Calciner emissions. Therefore, to a close approximation, the NWCF ETS can be scaled to the risk terms previously determined for the NWCF Calciner. The NWCF Calciner results are described in NWCF Calciner Emissions Inventory -Final Report for Phase IV Testing (2001).

Compounds with an EPA hazards quotient (HQ) or a cancer risk (Risk) present in the NWCF ETS samples, were ratioed to the NWCF Calciner emissions rate to determine an estimated NWCF ETS risk. Maximum values were used to bound risks. The NWCF Calciner emission rates were normalized to an annual basis. To compare the NWCF ETS results, measured NWCF ETS emissions were multiplied by a factor of 0.274 to normalize them to an annual basis. This is based on the NWCF ETS operating twelve hours a day, 200 days a year.

It was observed that the emissions rates were much lower for the NWCF ETS than from the NWCF Calciner with the exception of benzoic acid. The semi-volatiles were the largest contributor to the HQ and the Risk. The largest contributor was a phthalate (bis(2 ethylhexyl)phthalate) which is a common sampling or laboratory contaminate from plastics such as tubing, bottles, etc. Most of the materials "detected" were present at levels below the RL and in only a few samples. Benzoic acid, the single organic found in high concentrations than the NWCF Calciner, has a relatively low cancer risk and hazard quotient compound. The total HQ for the NWCF ETS was 6.2e-6 as compared to 3.3 e-03 for the NWCF Calciner and 0.25 for the EPA target criteria. The cancer risk was 1.3e-10 compared to 1.9e-07 for the NWCF Calciner and an EPA target of 1e-5.

A risk summary is given in Figures 12 and 13. Tables 18, 19, 20, and 21 give the concentration ratios and scaled risk factors.

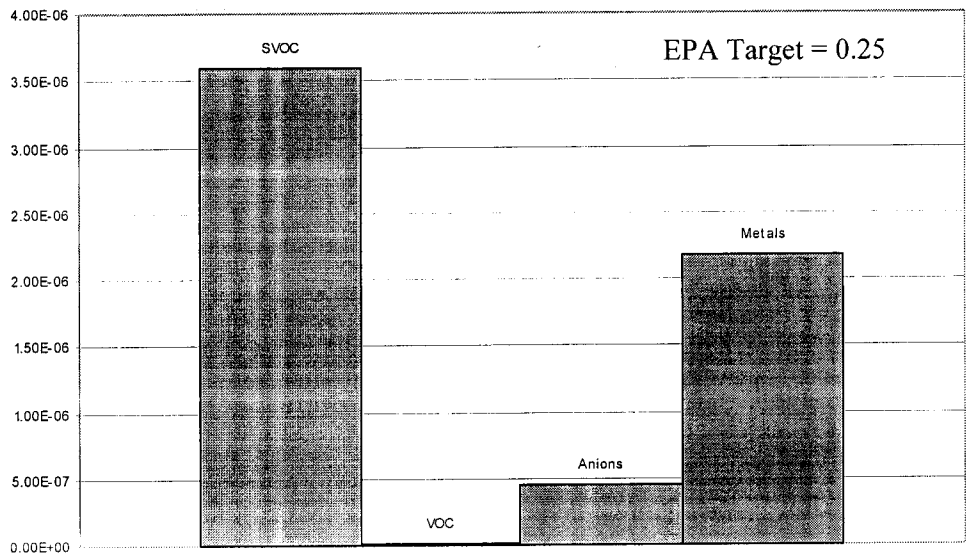

Figure 12. NWCF ETS EPA hazards quotient.

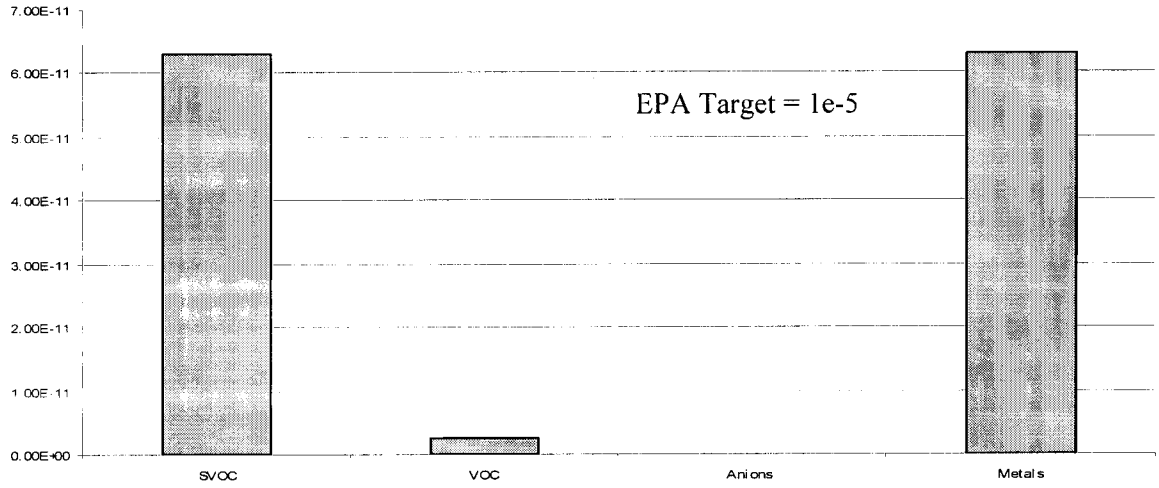

Figure 13. NWCF ETS cancer risk by pollutant category.

Table 18. Risk scaling of Method 0010 analytes.

Analyte	NWCF Hazard	Concentration Ratio	NWCF ETS Hazard	Risk
Acenaphthene	3.70E-12	2.6[1]	9.60E-12	
Acenaphthylene				
Acetophenone	5.60E-09	0.048[1]	2.69E-10	
Anthracene	6.60E-12	35[1]	2.31E-10	
Benzoic acid	4.50E-09	0.15	6.75E-10	
Benzo(a)anthracene				
Benzo(a)pyrene				
Benzo(b)fluoranthene				
Benzo(g,h,i)perylene				
Benzo(k)fluoranthene				
bis(2-Chloroethyl)ether	9.90E-10	0.02	1.98E-11	2.00E-11
bis(2-Ethylhexyl)phthalate	1.70E-04	0.013	2.21E-06	2.00E-11
4-Bromophenyl-phenylether	4.60E-07	0.03	1.38E-08	
Butylbenzylphthalate	7.50E-09	0.02	1.50E-10	
Carbazole				
2-Chloronaphthalene	4.20E-09	0.02	8.40E-11	
2-Chlorophenol	2.20E-06	8.00E-04	1.76E-09	
4-Chlorophenyl phenyl ether				
Chrysene				
Di-n-butylphthalate	4.50E-07	0.025	1.13E-08	
Di-n-octylphthalate	3.50E-09	0.1	3.50E-10	
Dibenz(a,h)anthracene				
Dibenzofuran				
1,2-Dichlorobenzene	1.60E-09	0.09	1.44E-10	
1,3-Dichlorobenzene	9.90E-10	0.1	9.90E-11	
1,4-Dichlorobenzene	3.90E-10	0.12	4.68E-11	
Diethylphthalate	3.20E-09	0.02	6.40E-11	
Dimethyl phthalate	1.40E-10	2.00E-02	2.80E-12	
2,4-Dinitrotoluene	3.90E-08	0.014	5.46E-10	
2,6-Dinitrotoluene	2.10E-06	0.02	4.20E-08	
1,2-Diphenylhydrazine	3.50E-09	0.02	7.00E-11	8.00E-12
Fluoranthene	9.70E-10	21.5[1]	2.09E-08	
Fluorene				
Hexachlorocyclopentadiene	2.40E-04	2.00E-03	4.80E-07	
Hexachlorobenzene	6.10E-07	0.02	1.22E-08	1.50E-11
Hexachlorobutadiene				
Hexachloroethane	8.20E-07	0.014	1.15E-08	1.50E-13
Indeno(1,2,3-cd)pyrene				
Isophorone	3.90E-09	0.02	7.80E-11	1.00E-14
2-Methylnaphthalene				

Table 18. Risk scaling of Method 0010 analytes.

Analyte	NWCF Hazard	Concentration Ratio	NWCF ETS Hazard	Risk
N-Nitrosodimethylamine				
N-Nitrosodiphenylamine	2.40E-12	0.03	7.20E-14	
Naphthalene	3.60E-07	0.014	5.04E-09	
Nitrobenzene	3.40E-09	3.00E-03	1.02E-11	
2-Nitrophenol				
4-Nitrophenol	1.40E-06	8.00E-04	1.12E-09	
2,2'-Oxybis(1-chloropropane)				
Phenanthrene				
Phenol	2.90E-08	4.00E-03	1.16E-10	
Pyrene	3.20E-08	34[1]	1.09E-06	
1,2,4-Trichlorobenzene	1.60E-09	0.1	1.60E-10	
Total			3.90E-06	6.32E-11

1. Compounds evaluated using PAH high resolution method for NWCF Calciner.

Table 19. Risk scaling for Method 0031 analytes.

Analyte	NWCF Hazard	Concentration Ratio	NWCF ETS Hazard	Risk
Acetone	6.30E-08	0.023	1.45E-09	
Benzene	4.10E-06	7.70E-04	3.16E-09	
Bromomethane				
2-Butanone	1.50E-09	0.046	6.90E-11	
Carbon disulfide	9.00E-10	0.147	1.32E-10	
Carbon tetrachloride	1.30E-08	0.0351	4.56E-10	1.70E-13
Chlorobenzene	4.80E-08	0.0076	3.65E-10	
Chloroethane	3.20E-11	0.044	1.41E-12	
Chloroform	1.90E-08	0.044	8.36E-10	6.60E-13
Chloromethane	1.50E-09	0.466	6.99E-10	3.70E-13
Dichlorodifluoromethane	2.00E-09	0.0466	9.32E-11	
1,2-Dichloroethane	3.20E-08	0.0356	1.14E-09	3.00E-13
1,1-Dichloroethene	1.00E-08	0.041	4.10E-10	3.40E-13
1,2-Dichloropropane	8.10E-08	0.03	2.43E-09	1.90E-13
Methylene chloride	5.50E-10	0.877	4.82E-10	4.80E-13
Toluene	7.20E-10	0.055	3.96E-11	
Trichlorofluoromethane	8.30E-10	0.02	1.66E-11	
Vinyl chloride	1.80E-12	0.0356	6.41E-14	6.40E-14
o-Xylene	4.80E-11	0.018	8.64E-13	
Totals			1.18E-08	2.574E-12

Table 20. Risk scaling for Method 0050 analytes.

Analyte	NWCF Hazard	Concentration Ratio	NWCF ETS Hazard	Risk
Chloride (as HCl)	1.50E-05	0.02	3.00E-07	
Chloride (as Cl2)	1.70E-07	0.0047	7.99E-10	
Fluoride (as HF)	3.50E-05	0.00082	2.87E-08	
Nitrate (as HNO3)	9.50E-04	0.00008	7.60E-08	
Nitrite (as HNO2)				
Particulate				
Total			4.05E-07	----------

Table 21. Risk scaling for Method 0060 analytes.

Analyte	NWCF Hazard	Concentration Ratio	HLLWE Hazard	Risk
Aluminum (Al)	5.7E-09	0.036	2.1E-10	
Antimony (Sb)	1.50E-09	0.056	8.48E-11	
Arsenic (As)	1.30E-14	2.2E-7	7.8E-22	
Barium (Ba)	7.50E-06	0.0025	1.88E-08	
Beryllium (Be)				
Cadmium (Cd)	1.70E-07	0.026	4.5E-09	1.70E-12
Chromium (Cr)	9.00E-07	0.047	4.23E-08	6.0E-11
Cobalt (Co)				
Copper (Cu)	4.50E-09	0.017	7.5E-11	
Lead (Pb)	2.90E-08	0.008	2.4E-10	
Manganese (Mn)	1.60E-05	0.085	1.36E-06	
Mercury (Hg)	2.10E-04	0.0036	7.56E-07	
Nickel (Ni)	2.30E-11	0.07	1.61E-12	1.30E-12
Selenium (Se)	8.20E-10	2.00E-11	1.64E-20	
Silver (Ag)				
Thallium (Tl)	2.7E-8	0.14	4.0E-9	
Vanadium (V)				
Zinc (Zn)	2.00E-08	5.00E-05	1.00E-12	
			Total	
Total			**2.19E-06**	**6.3E-11**

10. CONCLUSIONS

Characterization samples for the NWCF ETS were collected with only minor deviations from EPA protocols. Due to ALARA concerns, the samples were collected at a single point in the duct and the probe was not removed between sample trains. The NWCF ETS emissions rates for all species were relatively low in terms of regulatory emissions limits and health risk considerations. It was observed that organic compound emissions are slightly higher at the beginning of the batch while metals emissions, including mercury, are slightly higher at the end of the evaporator batch. Mercury emissions were less than 5 ppbv (< 40 μg/dscm), while the sum of HCl and Cl2 emissions was less than 1 ppmv. The sum of all organic emissions also was less than 1 ppmv. Particulate emissions (included the apportioned particulate recovered in the final probe rinse) are less than 0.9 mg/dscm and less than 0.7 mg/dscm at the beginning and end of the evaporator batch, respectively.

The estimated HQ for the evaporator was 6.2e-6 as compared to 0.25 for the EPA target criteria. The estimated cancer risk was 1.3e-10 compared to an EPA target of 1.0e-5. The NWCF ETS offgas emissions inventory was completed in accordance with the QAPjP developed and approved for this activity. Conventional EPA sampling and analytical methods were used to characterize volatile and semivolatile organic compounds, multiple metals, HCl/Cl_2, and particulate emissions.

Diligence in following sample checklists, continuous monitoring by either the Project Technical Leads and Quality Assurance Office, use of a master sample collection list, pre-defined sample labels, and RFA/COC documentation provided for the best possible sample collection accuracy and consistency. The data are believed to be accurate and representative of the NWCF ETS for the feed and system operating conditions during the offgas sampling period. A compilation of the process operating parameters, the offgas sample analytical data summaries, and the calculated emissions rates and liquid composition data for the evaporator feed, overhead condensate, and bottoms are included in the report appendices for permit applications purposes.

NWCF ETS operations were normal and consistent throughout the three-week sample collection period. Feed batches were consistent, as were the evaporator operating parameters and offgas system conditions. Radiation levels in the offgas samples were extremely low. Extended gamma scanning did not identify any gamma emitters in either the sample contamination trains or ongoing screening samples. Gross beta and gross alpha levels were only detected in the pico-curies range, easily meeting all of the analytical laboratory sample acceptance criteria. Tritium levels were low and proportionate to the low levels of moisture that were present in the NWCF offgas stream. Oxygen levels in the offgas duct were comparable to ambient air conditions.

Species absorption in the probe liner was minor. The exception may be organic particulate. The apportioned amount of organic particulate contained in the final probe rinse was approximately 25% of the average Method 0050 run total particulate measurements. This suggests that some semi-volatile organic matter could be potentially deposited on the probe liner. Even when the SVOC results are conservatively escalated by 25%, to account for the maximum potential portion of semivolatile material adsorbed on the probe liner, the outcome of the emissions rates are risk calculations are not significant.

Metal adsorption on the probe was low for all metals. Less than 0.1% of the mercury was deposited on the probe liner. Therefore, apportionment of the final probe rinse to the Method 0060 Metals trains is not significant.

11. REFERENCES

ASTM Standard E29-93a , 1999, "Standard Practice for Using Significant Digits in Test Data to Determine Conformance with Specifications."

Bechtel BWXT Idaho, LLC, 2000, *Balance of Plant Sampling and Analysis Plan (Input to PEWE and LET&D)*, PLN-613, Rev. 1, February 2000.

Bechtel BWXT Idaho, LLC, 2001, *INTEC Quality Assurance Project Plan for HLLWE Offgas Emissions Inventory Project*, PLN-880, Rev. 0, May 2001.

Bechtel BWXT Idaho, LLC, 2001, *Test Plan for the HLLWE Gas Emission Inventory*, PLN-879, Rev. 0, May 2001.

Bechtel BWXT Idaho, LLC, 2001, *Package and Ship NWCF Offgas Emissions Samples Offsite for Analysis*, MCP-1173, Rev. 2, June 2001.

Bechtel BWXT Idaho, LLC, *Sample NWCF Offgas for Emissions Characterization*, TPR-5496, Rev. 6, June 2001.

Boardman, R. D., L. J. Young, N. R. Soelberg, and L. A. Matejka, 2001, *NWCF Calciner Emissions Inventory – Final Report for Phase IV Testing*, EXT-01-00260, February 2001.

Severn Trent Services, 2001, *Analytical Report for the Idaho Nuclear Technology and Engineering Center (INTEC) High Level Waste Evaporator (HLLWE) Effluent Gas Emissions Inventory*, September 2001.

APPENDIX A

ANALYTICAL DATA SUMMARIES

CONTENTS

Table A-1. HLLWE Run ID: 0010-STRT-1 ..... A1
Table A-2. HLLWE Run ID: 0010-END-1 ..... A2
Table A-3. HLLWE Run ID: 0010-STRT-2 ..... A3
Table A-4. HLLWE Run ID: 0010-END-2 ..... A4
Table A-5. HLLWE Run ID: 0010-BT-1 ..... A5
Table A-6. Run 2, XAD-2 Resin Tube Trip Blank/Reagent Blank A6
Table A-7. HLLWE Run ID: 0031-STRT-1 ..... A7
Table A-8. HLLWE Run ID: 0031-END-1 ..... A8
Table A-9. HLLWE Run ID: 0031-STRT-2 ..... A9
Table A-10. HLLWE Run ID: 0031-END-2 ..... A10
Table A-11. Run 2, VOST Tenax Tube Pair Field Blank A11
Table A-12. Run 2, VOST Anasorb 747 Tube Field Blank A12
Table A-13. HLLWE Run ID: 0050-STRT-1 ..... A13
Table A-14. HLLWE Run ID: 0050-END-1 ..... A14
Table A-15. HLLWE Run ID: 0050-STRT-2 ..... A15
Table A-16. HLLWE Run ID: 0050-END-2 ..... A16
Table A-17. M5 Particulate and Anion Train Run 2 Reagent Blanks A17
Table A-18. M5 Particulate and Anion Train Run 2 INTEC Deionized Water Reagent Blank A18
Table A-19. M5 Particulate and Anion Train Final Acetone Probe Rinse A19
Table A-20. HLLWE Run ID: 0060-STRT-1 ..... A20
Table A-21. HLLWE Run ID: 0060-END-1 ..... A21
Table A-22. HLLWE Run ID: 0060-STRT-2 ..... A22
Table A-23. HLLWE Run ID: 0060-END-2 ..... A23
Table A-24. HLLWE Run ID: 0060-BT-1 ..... A24
Table A-25. Method 0060 Multi-Metals Train (MMT) Analytical Results Summary Run 2 Front Half Composite Reagent Blank A25
Table A-26. Method 0060 Multi-Metals Train (MMT) Analytical Results Summary Run 2 Back Half Composite Reagent Blank A26
Table A-27. Method 0060 Multi-Metals Train (MMT) Analytical Results Summary Run 2 Mercury Impinger Composite Reagent Blank A27
Table A-28. Method 0060 Multi-Metals Train (MMT) Analytical Results Summary Run 2 HCl Impinger Rinse Solution Reagent Blank A28
Table A-29. Method 0060 Multi-Metals Train (MMT) Analytical Results Summary Run 2 INTEC Deionized Water Reagent Blank A29
Table A-30. Final (Post-Test) Acetone Probe Rinse and Nitric Acid Probe Rinse Composite Metallic Analyte Analytical Results Summary A-30

MM-5 Train Summary - Run 1 Train Totals
Semivolatile Organic Compounds Analytical Results Summary
Table A-1. HLLWE Run ID: 0010-STRT-1

Field Sample Name: MM-5 Train
Sample Description: MM-5 Train Totals for Semivolatile Organic Compounds Analysis

Analyte	CAS Registry Number	MM-5 Train Front Half Composite[1] (µg)		MM-5 Train Back Half Composite[2] (µg)		MM-5 Train Condensate Composite[3] (µg)		MM-5 Train Totals[4] (Total µg)		*Project Specific Flag*[7]
		Risk Result	Flag[5]	Risk Result	Flag[5]	Risk Result	Flag[5]	Total[6]	Flag	
Target Compound List										
Acenaphthene	83-32-9	1.3	U	6.6	U	1.9	U	< 9.8		N
Acenaphthylene	208-96-8	1.3	U	6.6	U	1.6	U	< 9.5		N
Acetophenone	9[8-86-2	2.0	U	44	J	2.6	U	< 49	J	P
Aniline	62-53-3	2.5	U	94	U	18	U	< 110		N
Anthracene	120-12-7	1.3	U	6.6	U	1.6	U	< 9.5		N
Benzidine	92-87-5	100	U	500	U	66	U	< 670		N
Benzoic acid	65-85-0	100	U	4,800	E	9.4	U	< 4,900	E	P
Benzo(a)anthracene	56-55-3	2.2	U	7.6	U	1.7	U	< 12		N
Benzo(a)pyrene	50-32-8	2.6	U	130	U	1.8	U	< 130		N
Benzo(b)fluoranthene	205-99-2	3.7	U	290	U	4.2	U	< 300		N
Benzo(g,h,i)perylene	191-24-2	7.3	U	160	U	2.1	U	< 170		N
Benzo(k)fluoranthene	207-08-9	5.5	U	420	U	2.9	U	< 430		N
Benzyl alcohol	100-51-6	92	U	470	U	4.2	U	< 570		N
bis(2-Chloroethoxy)methane	111-91-1	1.5	U	6.6	U	2.0	U	< 10		N
bis(2-Chloroethyl)ether	111-44-4	2.0	U	7.3	U	1.7	U	< 11		N
bis(2-Ethylhexyl)phthalate	117-81-7	14		100	J	11		< 120	J	A
4-Bromophenyl-phenylether	101-55-3	1.4	U	6.6	U	1.4	U	< 9.4		N
Butylbenzylphthalate	85-68-7	2.9	U	7.9	U	2.3	U	< 13		N
Carbazole	86-74-8	2.0	U	8.4	U	2.2	U	< 13		N
4-Chloro-3-methylphenol	59-50-7	2.6	U	8.1	U	6.6	U	< 17		N
4-Chloroaniline	106-47-8	3.1	U	79	U	7.9	U	< 90		N
2-Chloronaphthalene	91-58-7	1.3	U	6.6	U	1.4	U	< 9.3		N
2-Chlorophenol	95-57-8	2.6	U	6.6	U	1.7	U	< 11		N
4-Chlorophenyl phenyl ether	7005-72-36	1.3	U	6.6	U	3.1	U	< 11		N
Chrysene	218-01-9	2.3	U	8.4	U	1.3	U	< 12		N

MM-5 Train Summary - Run 1 Train Totals (Continued)
Semivolatile Organic Compounds Analytical Results Summary
Table A-1. HLLWE Run ID: 0010-STRT-1

Analyte	CAS Registry Number	MM-5 Train Front Half Composite[1] (µg)		MM-5 Train Back Half Composite[2] (µg)		MM-5 Train Condensate Composite[3] (µg)		MM-5 Train Totals[4] (Total µg)		*Project Specific Flag*[7]
		Risk Result	Flag[5]	Risk Result	Flag[5]	Risk Result	Flag[5]	Total[6]	Flag	
Di-n-butylphthalate	84-74-2	1.9	J	100	U	2.3	U	< 100	J	P
Di-n-octylphthalate	117-84-0	11		150	U	2.5	J	< 160	J	P
Dibenz(a,h)anthracene	53-70-3	5.2	U	160	U	2.9	U	< 170		N
Dibenzofuran	132-64-9	1.4	U	6.6	U	2.9	U	< 11		N
1,2-Dichlorobenzene	95-50-1	2.2	U	6.8	U	1.7	U	< 11		N
1,3-Dichlorobenzene	541-73-1	3.1	U	7.3	U	1.4	U	< 12		N
1,4-Dichlorobenzene	106-46-7	2.9	U	11	J	2.0	U	< 16	J	P
3,3'-Dichlorobenzidine	91-94-1	7.1	U	97	U	7.9	U	< 110		N
2,4-Dichlorophenol	120-83-2	3.9	U	6.6	U	2.3	U	< 13		N
Diethylphthalate	84-66-2	5.4	J	9.4	U	1.4	U	< 16	J	P
Dimethyl phthalate	131-11-3	1.7	U	6.6	U	1.3	U	< 9.6		N
2,4-Dimethylphenol	105-67-9	7.6	U	50	U	1.5	U	< 59		N
4,6-Dinitro-2-methylphenol	534-52-1	13	U	120	U	1.5	U	< 130		N
2,4-Dinitrophenol	51-28-5	15	U	250	U	3.9	U	< 270		N
2,4-Dinitrotoluene	121-14-2	4.2	U	6.6	U	2.6	U	< 13		N
2,6-Dinitrotoluene	606-20-2	3.4	U	6.6	U	2.1	U	< 12		N
1,2-Diphenylhydrazine	122-66-7	1.7	U	6.6	U	1.5	U	< 9.8		N
Fluoranthene	206-44-0	1.3	U	7.1	U	1.8	U	< 10		N
Fluorene	86-73-7	1.3	U	6.6	U	2.6	U	< 10		N
Hexachlorocyclopentadiene	77-47-4	26	U	130	U	6.6	U	< 160		N
Hexachlorobenzene	118-74-1	1.5	U	6.6	U	2.6	U	< 11		N
Hexachlorobutadiene	87-68-3	3.7	U	9.7	U	1.9	U	< 15		N
Hexachloroethane	67-72-1	6.6	U	7.1	U	1.9	U	< 16		N
Indeno(1,2,3-cd)pyrene	193-39-5	5.5	U	140	U	2.3	U	< 150		N
Isophorone	78-59-1	1.7	U	6.6	U	1.8	U	< 10		N
2-Methylnaphthalene	91-57-6	1.5	U	6.6	U	2.3	U	< 10		N
2-Methylphenol	95-48-7	6.0	U	39	U	2.1	U	< 47		N
3-Methylphenol & 4-Methylphenol	65794-96-9	6.0	U	26	U	2.2	U	< 34		N

MM-5 Train Summary - Run 1 Train Totals (Continued)
Semivolatile Organic Compounds Analytical Results Summary
Table A-1. HLLWE Run ID: 0010-STRT-1

Analyte	CAS Registry Number	MM-5 Train Front Half Composite[1] (µg)		MM-5 Train Back Half Composite[2] (µg)		MM-5 Train Condensate Composite[3] (µg)		MM-5 Train Totals[4] (Total µg)		*Project Specific Flag*[7]
		Risk Result	Flag[5]	Risk Result	Flag[5]	Risk Result	Flag[5]	Total[6]	Flag	
N-Nitroso-di-n-propylamine	621-64-7	1.9	U	6.6	U	2.3	U	< 11		N
N-Nitrosodimethylamine	62-75-9	1.9	U	6.6	U	2.2	U	< 11		N
N-Nitrosodiphenylamine	86-30-6	1.6	U	12	U	1.4	U	< 15		N
Naphthalene	91-20-3	1.3	U	7.9	U	1.8	U	< 11		N
2-Nitroaniline	88-74-4	1.5	U	6.6	U	2.9	U	< 11		N
3-Nitroaniline	99-09-2	10	U	26	U	4.7	U	< 41		N
4-Nitroaniline	100-01-6	6.0	U	26	U	3.9	U	< 36		N
Nitrobenzene	98-95-1	1.9	U	12	J	1.7	U	< 16	J	P
2-Nitrophenol	88-75-5	8.4	U	80		2.6	U	< 91		P
4-Nitrophenol	100-02-7	8.7	U	63	J	3.9	U	< 76	J	P
2,2'-Oxybis(1-chloropropane)[8]	108-60-1	2.6	U	10	U	1.8	U	< 14		N
Pentachlorobenzene	608-93-5	1.4	U	6.6	U	2.3	U	< 10		N
Pentachloronitrobenzene	82-68-8	2.0	U	6.6	U	2.6	U	< 11		N
Pentachlorophenol	87-86-5	50	U	250	U	3.4	U	< 300		N
Phenanthrene	85-01-8	1.3	U	6.6	U	1.9	U	< 9.8		N
Phenol	108-95-2	2.9	U	72		2.2	U	< 77		P
Pyrene	129-00-0	1.9	U	6.8	U	1.4	U	< 10		N
Pyridine	110-86-1	2.3	U	9.7	U	5.2	U	< 17		N
1,2,4,5-Tetrachlorobenzene	95-94-3	2.3	U	6.6	U	2.2	U	< 11		N
1,2,4-Trichlorobenzene	120-82-1	1.9	U	7.9	U	2.2	U	< 12		N
2,4,5-Trichlorophenol	95-95-4	6.0	U	17	U	2.1	U	< 25		N
2,4,6-Trichlorophenol	88-06-2	3.7	U	10	U	2.5	U	< 16		N

MM-5 Train Summary - Run 1 Train Totals (Continued)
Semivolatile Organic Compounds Analytical Results Summary
Table A-1. HLLWE Run ID: 0010-STRT-1

Analyte	CAS Registry Number	MM-5 Train Front Half Composite[1] (µg)		MM-5 Train Back Half Composite[2] (µg)		MM-5 Train Condensate Composite[3] (µg)		MM-5 Train Totals[4] (Total µg)		*Project Specific Flag*[7]
		Risk Result	Flag[5]	Risk Result	Flag[5]	Risk Result	Flag[5]	Total[6]	Flag	
TICs[9]										
Furan, 2,5-dimethyl-	625-86-5	4.1		---		9.5		14	N,J,M	P
3-Hexanone	589-38-8	---		190		---		190	N,J,M	P
2-Hexanone	591-78-6	---		230		---		230	N,J,M	P
Octane, 3-methyl-	2216-33-3	7.9		---		---		7.9	N,J,M	P
Benzaldehyde	100-52-7	---		1,100		---		1,100	N,J,M	P
Dodecane	112-40-3	---		67		---		67	N,J,M	P
Tridecane	629-50-5	---		20		---		20	N,J,M	P
Tetradecane	629-59-4	8.6		---		---		8.6	N,J,M	P
Pentadecane	629-62-9	15		---		---		15	N,J,M	P
Phosphoric acid tributyl ester	126-73-8	23		---		---		23	N,J,M	P
Cyclododecane	294-62-2	20		---		11		31	N,J,M	P
Heptadecane	629-78-7	5.5		---		3.4		8.9	N,J,M	P
Eicosane	112-95-8	---		---		2.0		2.0	N,J,M	P
Hexadecanoic acid	57-10-3	5.4		---		---		5.4	N,J,M	P
Octadecanoic acid	57-11-4	3.6		---		---		3.6	N,J,M	P
Phosphine oxide, triphenyl-	791-28-6	---		---		8.7		8.7	N,J,M	P
Heneicosane	629-94-7	---		---		2.0		2.0	N,J,M	P
Tetratetracontane	7098-22-8	---		---		6.6		6.6	N,J,M	P
Eicosane	112-95-8	---		---		4.1		4.1	N,J,M	P

Footnotes:

[1] The MM-5 Train Front Half Composite consists of the Particulate Filter and the Front Half of the Filter Holder and Probe Solvent Rinses.

[2] The MM-5 Train Back Half Composite consists of the XAD-2 Resin Tube and the Back Half of the Filter Holder and Coil Condenser Solvent Rinses.

[3] The MM-5 Train Condensate Composite consists of the Condensate and Impinger Contents and the Glassware Solvent Rinses.

[4] The total mass for each semivolatile compound found in the MM-5 sampling train consists of the sum of the MM-5 train's Front Half Composite contents, the train's Back Half Composite contents, and the Condensate Composite. The calculation is as follows:

(Total μg in the Front Half) + (Total μg in the Back Half) + (Concentration in the Condensate Composite x Condensate Composite Volume)
= Total μg in the MM-5 Sampling Train.

Therefore: (μg) + (μg) + (μg/Liter x Liter) = Total μg

The MM-5 Train Run Total (in Total μg) is the sum of results for the three (3) MM-5 train sample fractions using the following guidelines:

- When the train component analytical result is greater than the laboratory reporting limit (RL), the result included in the train total is the actual analytical result or "hit" determined by the laboratory.
- When the train component analytical result is greater than the reliable detection level (RDL), but less than the laboratory reporting limit (RL), the result included in the train total is actual analytical result or "hit" determined by the laboratory and the corresponding "J" flag is carried through the calculation to the train total.
- When the train analytical component result is less than the RDL, but greater than the method detection limit (MDL), the result included in the train total is the RDL and the corresponding "J" flag is carried through the calculation to the train total.
- When the train component analytical result is not detected down to the MDL, the result included in the train total is the RDL and the corresponding "U" flag is carried through the calculation to the train total.
- It should be noted that when the RDL is selected as the default value using the guidelines above, but the RDL is greater than the RL, the RL is included in the train total.

The data flags attached to the MM-5 Train Total are the cumulative set of flags for each train component included as part of the MM-5 train total. A flag attached to an MM-5 train component is carried through to the "MM-5 Train Total" column when the associated component analytical result is a significant number in comparison to the MM-5 Train Total. That is, if the MM-5 Train Total is affected by an MM-5 train component analytical result, the flag is carried through to the MM-5 Train Total, but if the MM-5 Train Total is not affected by an MM-5 train component, the flag is not carried through to the MM-5 Train Total. The combinations of train fractions are conducted following the standard practice of using significant figures found in ASTM E29-93a(1999), "Standard Practice for Using Significant Digits in Test Data to Determine Conformance with Specifications" and Severn Trent Laboratories standard operating procedure number QA-004, "Rounding and Significant Figures".

[5] This flag is the laboratory data flag that corresponds to EPA guidelines. The data flags for these samples are as follows:

- A "U" qualifier indicates that this analyte was analyzed for, but was not detected down to the MDL.
- A "J" qualifier indicates that this compound was detected, but at a concentration below the laboratory RL. The analytical result is therefore an estimated value.
- A "B" qualifier indicates that this compound was found in the associated laboratory method blank. Under these conditions these values are regarded as estimated values.
- A "D" qualifier indicates that this result was obtained through dilution of the sample. This original analysis yielded a result that exceeded the calibration range.
- An "N" qualifier indicates that this compound is a tentatively identified compound (TIC). Therefore the value is estimated.
- An "E" qualifier indicates that this compound exceeded the calibration range of the instrument.
- An "A" qualifier indicates that this result is an Aldol-condensation product.
- An "M" qualifier indicates that this result was measured against the nearest internal standard and assumed a response factor of one (1).

[6] When listed, the less than (<) sign indicates that at least one sample fraction result is either a "non-detect" value down to the MDL of the measurement that carries, or an estimated "hit" value that is below the RDL. In either case, the final value for the fraction that is included in the data set total is the default RDL value and the actual value of the total is known to be less than (<) the displayed result.

[7] Entries in this column are project-specific train total flags that are applied to the run total values and are not standard EPA data flags. These project-specific flags are utilized for the INEEL NWCF HLLWE Effluent Gas Emissions Inventory project and are defined as follows:

- An "N" flag in this column indicates that the compound was not measured (detected) in any of the sampling train components, or fractions.
- A "P" flag in this column indicates that the compound was measured (detected) in one or more of the train components, or fractions, but not in all of the sampling train fractions.
- An "A" flag in this column indicates that the compound was measured (detected) in all of the sampling train components, or fractions.

[8] Bis(2-chloroisopropyl)ether and 2,2'-Oxybis(1-chloropropane) are synonyms.

[9] The tentatively identified compounds (TICs) were identified by conducting a mass spectral library search using the NBS library of data. It should be noted that TICs that give the same mass spectral match for GC peaks at different retention times are listed separately with the same compound identity. Under these conditions the compounds are likely indistinguishable isomers of the same compound. However, insufficient evidence is available to determine unequivocal identities.

MM-5 Train Summary - Run 3 Train Totals
Semivolatile Organic Compounds Analytical Results Summary
Table A-2. HLLWE Run ID: 0010-END-1

Field Sample Name: MM-5 Train
Sample Description: MM-5 Train Totals for Semivolatile Organic Compounds Analysis

Analyte	CAS Registry Number	MM-5 Train Front Half Composite[1] (µg)		MM-5 Train Back Half Composite[2] (µg)		MM-5 Train Condensate Composite[3] (µg)		MM-5 Train Totals[4] (Total µg)		*Project Specific Flag*[7]
		Risk Result	Flag[5]	Risk Result	Flag[5]	Risk Result	Flag[5]	Total[6]	Flag	
Target Compound List										
Acenaphthene	83-32-9	1.3	U	6.6	U	1.9	U	< 9.8		N
Acenaphthylene	208-96-8	1.3	U	6.6	U	1.6	U	< 9.5		N
Acetophenone	9[8-86-2	2.0	U	31	J	2.6	U	< 36	J	P
Aniline	62-53-3	2.5	U	94	U	18	U	< 110		N
Anthracene	120-12-7	1.3	U	6.6	U	1.6	U	< 9.5		N
Benzidine	92-87-5	100	U	500	U	66	U	< 670		N
Benzoic acid	65-85-0	100	U	2,500	E	9.4	U	< 2,600	E	P
Benzo(a)anthracene	56-55-3	2.2	U	7.6	U	1.7	U	< 12		N
Benzo(a)pyrene	50-32-8	2.6	U	130	U	1.8	U	< 130		N
Benzo(b)fluoranthene	205-99-2	3.7	U	290	U	4.2	U	< 300		N
Benzo(g,h,i)perylene	191-24-2	7.3	U	160	U	2.1	U	< 170		N
Benzo(k)fluoranthene	207-08-9	5.5	U	420	U	2.9	U	< 430		N
Benzyl alcohol	100-51-6	92	U	470	U	4.2	U	< 570		N
bis(2-Chloroethoxy)methane	111-91-1	1.5	U	6.6	U	2.0	U	< 10		N
bis(2-Chloroethyl)ether	111-44-4	2.0	U	7.3	U	1.7	U	< 11		N
bis(2-Ethylhexyl)phthalate	117-81-7	49		100	U	68		< 220		P
4-Bromophenyl-phenylether	101-55-3	1.4	U	6.6	U	1.4	U	< 9.4		N
Butylbenzylphthalate	85-68-7	2.9	U	7.9	U	2.3	U	< 13		N
Carbazole	86-74-8	2.0	U	8.4	U	2.2	U	< 13		N
4-Chloro-3-methylphenol	59-50-7	2.6	U	8.1	U	6.6	U	< 17		N
4-Chloroaniline	106-47-8	3.1	U	79	U	7.9	U	< 90		N
2-Chloronaphthalene	91-58-7	1.3	U	6.6	U	1.4	U	< 9.3		N
2-Chlorophenol	95-57-8	2.6	U	6.6	U	1.7	U	< 11		N
4-Chlorophenyl phenyl ether	7005-72-36	1.3	U	6.6	U	3.1	U	< 11		N
Chrysene	218-01-9	2.3	U	8.4	U	1.3	U	< 12		N

MM-5 Train Summary - Run 3 Train Totals (Continued)
Semivolatile Organic Compounds Analytical Results Summary
Table A-2. HLLWE Run ID: 0010-END-1

Analyte	CAS Registry Number	MM-5 Train Front Half Composite[1] (µg)		MM-5 Train Back Half Composite[2] (µg)		MM-5 Train Condensate Composite[3] (µg)		MM-5 Train Totals[4] (Total µg)		*Project Specific Flag*[7]
		Risk Result	Flag[5]	Risk Result	Flag[5]	Risk Result	Flag[5]	Total[6]	Flag	
Di-n-butylphthalate	84-74-2	1.9	J	100	U	2.3	U	< 100	J	P
Di-n-octylphthalate	117-84-0	8.4	J	150	U	2.5	J	< 160	J	P
Dibenz(a,h)anthracene	53-70-3	5.2	U	160	U	2.9	U	< 170		N
Dibenzofuran	132-64-9	1.4	U	6.6	U	2.9	U	< 11		N
1,2-Dichlorobenzene	95-50-1	2.2	U	6.8	U	1.7	U	< 11		N
1,3-Dichlorobenzene	541-73-1	3.1	U	7.3	U	1.4	U	< 12		N
1,4-Dichlorobenzene	106-46-7	2.9	U	6.8	J	2.0	U	< 12	J	P
3,3'-Dichlorobenzidine	91-94-1	7.1	U	97	U	7.9	U	< 110		N
2,4-Dichlorophenol	120-83-2	3.9	U	6.6	U	2.3	U	< 13		N
Diethylphthalate	84-66-2	3.9	U	9.4	U	1.4	U	< 15		N
Dimethyl phthalate	131-11-3	1.7	U	6.6	U	1.3	U	< 9.6		N
2,4-Dimethylphenol	105-67-9	7.6	U	50	U	1.5	U	< 59		N
4,6-Dinitro-2-methylphenol	534-52-1	13	U	120	U	1.5	U	< 130		N
2,4-Dinitrophenol	51-28-5	16	U	250	U	3.9	U	< 270		N
2,4-Dinitrotoluene	121-14-2	4.2	U	6.6	U	2.6	U	< 13		N
2,6-Dinitrotoluene	606-20-2	3.4	U	6.6	U	2.1	U	< 12		N
1,2-Diphenylhydrazine	122-66-7	1.7	U	6.6	U	1.5	U	< 9.8		N
Fluoranthene	206-44-0	1.3	U	7.1	U	1.8	U	< 10		N
Fluorene	86-73-7	1.3	U	6.6	U	2.6	U	< 10		N
Hexachlorocyclopentadiene	77-47-4	26	U	130	U	6.6	U	< 160		N
Hexachlorobenzene	118-74-1	1.5	U	6.6	U	2.6	U	< 11		N
Hexachlorobutadiene	87-68-3	3.7	U	9.7	U	1.9	U	< 15		N
Hexachloroethane	67-72-1	6.6	U	7.1	U	1.9	U	< 16		N
Indeno(1,2,3-cd)pyrene	193-39-5	5.5	U	140	U	2.3	U	< 150		N
Isophorone	78-59-1	1.7	U	6.6	U	1.8	U	< 10		N
2-Methylnaphthalene	91-57-6	1.5	U	6.6	U	2.3	U	< 10		N
2-Methylphenol	95-48-7	6.0	U	39	U	2.1	U	< 47		N
3-Methylphenol & 4-Methylphenol	65794-96-9	6.0	U	26	U	2.2	U	< 34		N

MM-5 Train Summary - Run 3 Train Totals (Continued)
Semivolatile Organic Compounds Analytical Results Summary
Table A-2. HLLWE Run ID: 0010-END-1

Analyte	CAS Registry Number	MM-5 Train Front Half Composite[1] (µg)		MM-5 Train Back Half Composite[2] (µg)		MM-5 Train Condensate Composite[3] (µg)		MM-5 Train Totals[4] (Total µg)		*Project Specific Flag*[7]
		Risk Result	Flag[5]	Risk Result	Flag[5]	Risk Result	Flag[5]	Total[6]	Flag	
N-Nitroso-di-n-propylamine	621-64-7	1.9	U	6.6	U	2.3	U	< 11		N
N-Nitrosodimethylamine	62-75-9	1.9	U	6.6	U	2.2	U	< 11		N
N-Nitrosodiphenylamine	86-30-6	1.6	U	12	U	1.4	U	< 15		N
Naphthalene	91-20-3	1.3	U	7.9	U	1.8	U	< 11		N
2-Nitroaniline	88-74-4	1.5	U	6.6	U	2.9	U	< 11		N
3-Nitroaniline	99-09-2	10	U	26	U	4.7	U	< 41		N
4-Nitroaniline	100-01-6	6.0	U	26	U	3.9	U	< 36		N
Nitrobenzene	98-95-1	1.9	U	11	J	1.7	U	< 15	J	P
2-Nitrophenol	88-75-5	8.4	U	30	J	2.6	U	< 41	J	P
4-Nitrophenol	100-02-7	8.7	U	42	U	3.9	U	< 55		N
2,2'-Oxybis(1-chloropropane)[8]	108-60-1	2.6	U	10	U	1.8	U	< 14		N
Pentachlorobenzene	608-93-5	1.4	U	6.6	U	2.3	U	< 10		N
Pentachloronitrobenzene	82-68-8	2.0	U	6.6	U	2.6	U	< 11		N
Pentachlorophenol	87-86-5	50	U	250	U	3.4	U	< 300		N
Phenanthrene	85-01-8	1.3	U	6.6	U	1.9	U	< 9.8		N
Phenol	108-95-2	2.9	U	32	J	2.2	J	< 37	J	P
Pyrene	129-00-0	1.9	U	6.8	U	1.4	U	< 10		N
Pyridine	110-86-1	2.3	U	9.7	U	5.2	U	< 17		N
1,2,4,5-Tetrachlorobenzene	95-94-3	2.3	U	6.6	U	2.2	U	< 11		N
1,2,4-Trichlorobenzene	120-82-1	1.9	U	7.9	U	2.2	U	< 12		N
2,4,5-Trichlorophenol	95-95-4	6.0	U	17	U	2.1	U	< 25		N
2,4,6-Trichlorophenol	88-06-2	3.7	U	10	U	2.5	U	< 16		N

MM-5 Train Summary - Run 3 Train Totals (Continued)
Semivolatile Organic Compounds Analytical Results Summary
Table A-2. HLLWE Run ID: 0010-END-1

Analyte	CAS Registry Number	MM-5 Train Front Half Composite[1] (µg)		MM-5 Train Back Half Composite[2] (µg)		MM-5 Train Condensate Composite[3] (µg)		MM-5 Train Totals[4] (Total µg)		*Project Specific Flag*[7]
		Risk Result	Flag[5]	Risk Result	Flag[5]	Risk Result	Flag[5]	Total[6]	Flag	
TICs[9]										
Furan, 2,5-dimethyl-	625-86-5	4.7		---		3.1		7.8	N,J,M	P
3-Hexanone	589-38-8	---		96		---		96	N,J,M	P
2-Hexanone	591-78-6	---		120		---		120	N,J,M	P
Heptane, 2,3-dimethyl-	3074-71-3	9.9		---		---		9.9	N,J,M	P
Benzaldehyde	100-52-7	---		740		---		740	N,J,M	P
Formic acid, phenylmethyl ester	104-57-4	---		72		---		72	N,J,M	P
Benzaldehyde, 4-ethyl-	4748-78-1	---		57		---		57	N,J,M	P
Dodecane	112-40-3	---		48		---		48	N,J,M	P
Tridecane	629-50-5	---		21		---		21	N,J,M	P
2,4-Hexadiene	592-46-1	---		45		---		45	N,J,M	P
2,4-Hexadiene	592-46-1	---		110		---		110	N,J,M	P
Tetradecane	629-59-4	---		96		---		96	N,J,M	P
Phosphoric acid tributyl ester	126-73-8	16		---		---		16	N,J,M	P
Cyclododecane	294-62-2	24		---		6.5		30	N,J,M	P
Heptadecane	629-78-7	4.0		---		---		4.0	N,J,M	P
Octadecanoic acid	57-11-4	2.0		---		---		2.0	N,J,M	P

Footnotes:

[1] The MM-5 Train Front Half Composite consists of the Particulate Filter and the Front Half of the Filter Holder and Probe Solvent Rinses.

[2] The MM-5 Train Back Half Composite consists of the XAD-2 Resin Tube and the Back Half of the Filter Holder and Coil Condenser Solvent Rinses.

[3] The MM-5 Train Condensate Composite consists of the Condensate and Impinger Contents and the Glassware Solvent Rinses.

[4] The total mass for each semivolatile compound found in the MM-5 sampling train consists of the sum of the MM-5 train's Front Half Composite contents, the train's Back Half Composite contents, and the Condensate Composite. The calculation is as follows:

(Total μg in the Front Half) + (Total μg in the Back Half) + (Concentration in the Condensate Composite x Condensate Composite Volume)
= Total μg in the MM-5 Sampling Train.

Therefore: (μg) + (μg) + (μg/Liter x Liter) = Total μg

The MM-5 Train Run Total (in Total μg) is the sum of results for the three (3) MM-5 train sample fractions using the following guidelines:

- When the train component analytical result is greater than the laboratory reporting limit (RL), the result included in the train total is the actual analytical result or "hit" determined by the laboratory.
- When the train component analytical result is greater than the reliable detection level (RDL), but less than the laboratory reporting limit (RL), the result included in the train total is actual analytical result or "hit" determined by the laboratory and the corresponding "J" flag is carried through the calculation to the train total.
- When the train analytical component result is less than the RDL, but greater than the method detection limit (MDL), the result included in the train total is the RDL and the corresponding "J" flag is carried through the calculation to the train total.
- When the train component analytical result is not detected down to the MDL, the result included in the train total is the RDL and the corresponding "U" flag is carried through the calculation to the train total.
- It should be noted that when the RDL is selected as the default value using the guidelines above, but the RDL is greater than the RL, the RL is included in the train total.

The data flags attached to the MM-5 Train Total are the cumulative set of flags for each train component included as part of the MM-5 train total. A flag attached to an MM-5 train component is carried through to the "MM-5 Train Total" column when the associated component analytical result is a significant number in comparison to the MM-5 Train Total. That is, if the MM-5 Train Total is affected by an MM-5 train component analytical result, the flag is carried through to the MM-5 Train Total, but if the MM-5 Train Total is not affected by an MM-5 train component, the flag is not carried through to the MM-5 Train Total. The combinations of train fractions are conducted following the standard practice of using significant figures found in ASTM E29-93a(1999), "Standard Practice for Using Significant Digits in Test Data to Determine Conformance with Specifications" and Severn Trent Laboratories standard operating procedure number QA-004, "Rounding and Significant Figures".

[5] This flag is the laboratory data flag that corresponds to EPA guidelines. The data flags for these samples are as follows:

- A "U" qualifier indicates that this analyte was analyzed for, but was not detected down to the MDL.
- A "J" qualifier indicates that this compound was detected, but at a concentration below the laboratory RL. The analytical result is therefore an estimated value.
- A "B" qualifier indicates that this compound was found in the associated laboratory method blank. Under these conditions these values are regarded as estimated values.
- A "D" qualifier indicates that this result was obtained through dilution of the sample. This original analysis yielded a result that exceeded the calibration range.
- An "N" qualifier indicates that this compound is a tentatively identified compound (TIC). Therefore the value is estimated.
- An "E" qualifier indicates that this compound exceeded the calibration range of the instrument.
- An "A" qualifier indicates that this result is an Aldol-condensation product.
- An "M" qualifier indicates that this result was measured against the nearest internal standard and assumed a response factor of one (1).

[6] When listed, the less than (<) sign indicates that at least one sample fraction result is either a "non-detect" value down to the MDL of the measurement that carries, or an estimated "hit" value that is below the RDL. In either case, the final value for the fraction that is included in the data set total is the default RDL value and the actual value of the total is known to be less than (<) the displayed result.

[7] Entries in this column are project-specific train total flags that are applied to the run total values and are not standard EPA data flags. These project-specific flags are utilized for the INEEL NWCF HLLWE Effluent Gas Emissions Inventory project and are defined as follows:

- An "N" flag in this column indicates that the compound was not measured (detected) in any of the sampling train components, or fractions.
- A "P" flag in this column indicates that the compound was measured (detected) in one or more of the train components, or fractions, but not in all of the sampling train fractions.
- An "A" flag in this column indicates that the compound was measured (detected) in all of the sampling train components, or fractions.

[8] Bis(2-chloroisopropyl)ether and 2,2'-Oxybis(1-chloropropane) are synonyms.

[9] The tentatively identified compounds (TICs) were identified by conducting a mass spectral library search using the NBS library of data. It should be noted that TICs that give the same mass spectral match for GC peaks at different retention times are listed separately with the same compound identity. Under these conditions the compounds are likely indistinguishable isomers of the same compound. However, insufficient evidence is available to determine unequivocal identities.

MM-5 Train Summary - Run 2 Train Totals
Semivolatile Organic Compounds Analytical Results Summary
Table A-3. HLLWE Run ID: 0010-STRT-2

Field Sample Name: MM-5 Train
Sample Description: MM-5 Train Totals for Semivolatile Organic Compounds Analysis

Analyte	CAS Registry Number	MM-5 Train Front Half Composite[1] (µg)		MM-5 Train Back Half Composite[2] (µg)		MM-5 Train Condensate Composite[3] (µg)		MM-5 Train Totals[4] (Total µg)		*Project Specific Flag*[7]
		Risk Result	Flag[5]	Risk Result	Flag[5]	Risk Result	Flag[5]	Total[6]	Flag	
Target Compound List										
Acenaphthene	83-32-9	1.3	U	6.6	U	8.0	J	< 16	J	P
Acenaphthylene	208-96-8	1.3	U	6.6	U	7.6	J	< 16	J	P
Acetophenone	9[8-86-2	2.0	U	32	J	7.9	U	< 42	J	P
Aniline	62-53-3	2.5	U	94	U	55	U	< 150		N
Anthracene	120-12-7	1.3	U	6.6	U	8.3	J	< 16	J	P
Benzidine	92-87-5	100	U	500	U	200	U	< 800		N
Benzoic acid	65-85-0	100	U	2,200	E	29	U	< 2,300	E	P
Benzo(a)anthracene	56-55-3	2.2	U	7.6	U	9.0	J	< 19	J	P
Benzo(a)pyrene	50-32-8	2.6	U	130	U	9.3	J	< 140	J	P
Benzo(b)fluoranthene	205-99-2	3.7	U	290	U	13	J	< 300	J	P
Benzo(g,h,i)perylene	191-24-2	7.3	U	160	U	9.5	J	< 180	J	P
Benzo(k)fluoranthene	207-08-9	5.5	U	420	U	9.0	J	< 430	J	P
Benzyl alcohol	100-51-6	92	U	470	U	12	U	< 570		N
bis(2-Chloroethoxy)methane	111-91-1	1.5	U	6.6	U	6.0	U	< 14		N
bis(2-Chloroethyl)ether	111-44-4	2.0	U	7.3	U	6.4	J	< 16	J	P
bis(2-Ethylhexyl)phthalate	117-81-7	16		100	J	16	J	< 130	J	A
4-Bromophenyl-phenylether	101-55-3	1.4	U	6.6	U	10	J	< 18	J	P
Butylbenzylphthalate	85-68-7	2.9	U	7.9	U	8.2	J	< 19	J	P
Carbazole	86-74-8	2.0	U	8.4	U	7.2	J	< 18	J	P
4-Chloro-3-methylphenol	59-50-7	2.6	U	8.1	U	20	U	< 31		N
4-Chloroaniline	106-47-8	3.1	U	79	U	24	U	< 110		N
2-Chloronaphthalene	91-58-7	1.3	U	6.6	U	6.8	J	< 15	J	P
2-Chlorophenol	95-57-8	2.6	U	6.6	U	5.4	J	< 15	J	P
4-Chlorophenyl phenyl ether	7005-72-36	1.3	U	6.6	U	9.4	J	< 17	J	P
Chrysene	218-01-9	2.3	U	8.4	U	9.9	J	< 21	J	P

MM-5 Train Summary - Run 2 Train Totals (Continued)
Semivolatile Organic Compounds Analytical Results Summary
Table A-3. HLLWE Run ID: 0010-STRT-2

Analyte	CAS Registry Number	MM-5 Train Front Half Composite[1] (µg)		MM-5 Train Back Half Composite[2] (µg)		MM-5 Train Condensate Composite[3] (µg)		MM-5 Train Totals[4] (Total µg)		*Project Specific Flag*[7]
		Risk Result	Flag[5]	Risk Result	Flag[5]	Risk Result	Flag[5]	Total[6]	Flag	
Di-n-butylphthalate	84-74-2	1.9	U	100	U	8.4	J	< 110	J	P
Di-n-octylphthalate	117-84-0	5.5	J	150	U	7.6	U	< 160	J	P
Dibenz(a,h)anthracene	53-70-3	5.2	U	160	U	8.4	J	< 170	J	P
Dibenzofuran	132-64-9	1.4	U	6.6	U	8.7	J	< 17	J	P
1,2-Dichlorobenzene	95-50-1	2.2	U	6.8	U	6.6	J	< 16	J	P
1,3-Dichlorobenzene	541-73-1	3.1	U	7.3	U	6.5	J	< 17	J	P
1,4-Dichlorobenzene	106-46-7	2.9	U	6.8	J	6.2	J	< 16	J	P
3,3'-Dichlorobenzidine	91-94-1	7.1	U	97	U	23	U	< 130		N
2,4-Dichlorophenol	120-83-2	3.9	U	6.6	U	7.1	U	< 18		N
Diethylphthalate	84-66-2	3.9	U	9.4	U	8.9	J	< 22	J	P
Dimethyl phthalate	131-11-3	1.7	U	6.6	U	8.1	J	< 16	J	P
2,4-Dimethylphenol	105-67-9	7.6	U	50	U	4.7	U	< 62		N
4,6-Dinitro-2-methylphenol	534-52-1	13	U	120	U	4.5	U	< 140		N
2,4-Dinitrophenol	51-28-5	15	U	250	U	12	U	< 280		N
2,4-Dinitrotoluene	121-14-2	4.2	U	6.6	U	8.1	J	< 19	J	P
2,6-Dinitrotoluene	606-20-2	3.4	U	6.6	U	6.3	J	< 16	J	P
1,2-Diphenylhydrazine	122-66-7	1.7	U	6.6	U	7.5	J	< 16	J	P
Fluoranthene	206-44-0	1.3	U	7.1	U	8.5	J	< 17	J	P
Fluorene	86-73-7	1.3	U	6.6	U	8.4	J	< 16	J	P
Hexachlorocyclopentadiene	77-47-4	26	U	130	U	20	U	< 180		P
Hexachlorobenzene	118-74-1	1.5	U	6.6	U	8.3	J	< 16	J	P
Hexachlorobutadiene	87-68-3	3.7	U	9.7	U	6.5	J	< 20	J	P
Hexachloroethane	67-72-1	6.6	U	7.1	U	6.4	J	< 20	J	P
Indeno(1,2,3-cd)pyrene	193-39-5	5.5	U	140	U	7.0	J	< 150	J	P
Isophorone	78-59-1	1.7	U	6.6	U	7.4	J	< 16	J	P
2-Methylnaphthalene	91-57-6	1.5	U	6.6	U	6.8	J	< 15	J	P
2-Methylphenol	95-48-7	6.0	U	39	U	6.3	U	< 51		N
3-Methylphenol & 4-Methylphenol	65794-96-9	6.0	U	26	U	6.8	U	< 39		N

MM-5 Train Summary - Run 2 Train Totals (Continued)
Semivolatile Organic Compounds Analytical Results Summary
Table A-3. HLLWE Run ID: 0010-STRT-2

Analyte	CAS Registry Number	MM-5 Train Front Half Composite[1] (µg)		MM-5 Train Back Half Composite[2] (µg)		MM-5 Train Condensate Composite[3] (µg)		MM-5 Train Totals[4] (Total µg)		*Project Specific Flag*[7]
		Risk Result	Flag[5]	Risk Result	Flag[5]	Risk Result	Flag[5]	Total[6]	Flag	
N-Nitroso-di-n-propylamine	621-64-7	1.9	U	6.6	U	6.8	U	< 15		N
N-Nitrosodimethylamine	62-75-9	1.9	U	6.6	U	6.6	J	< 15	J	P
N-Nitrosodiphenylamine	86-30-6	1.6	U	12	U	7.6	J	< 21	J	P
Naphthalene	91-20-3	1.3	U	7.9	U	7.4	J	< 17	J	P
2-Nitroaniline	88-74-4	1.5	U	6.6	U	8.4	U	< 17		N
3-Nitroaniline	99-09-2	10	U	26	U	14	U	< 50		N
4-Nitroaniline	100-01-6	6.0	U	26	U	12	U	< 44		N
Nitrobenzene	98-95-1	1.9	U	9.2	J	8.8	J	< 20	J	P
2-Nitrophenol	88-75-5	8.4	U	21	J	7.9	J	< 37	J	P
4-Nitrophenol	100-02-7	8.7	U	42	U	12	U	< 63		N
2,2'-Oxybis(1-chloropropane)[8]	108-60-1	2.6	U	10	U	9.7	J	< 22	J	P
Pentachlorobenzene	608-93-5	1.4	U	6.6	U	6.8	U	< 15		N
Pentachloronitrobenzene	82-68-8	2.0	U	6.6	U	7.9	U	< 16		N
Pentachlorophenol	87-86-5	50	U	250	U	10	U	< 310		N
Phenanthrene	85-01-8	1.3	U	6.6	U	8.6	J	< 17	J	P
Phenol	108-95-2	2.9	U	23	J	7.4	J	< 33	J	P
Pyrene	129-00-0	1.9	U	6.8	U	9.4	J	< 18	J	P
Pyridine	110-86-1	2.3	U	9.7	U	16	U	< 28		N
1,2,4,5-Tetrachlorobenzene	95-94-3	2.3	U	6.6	U	6.6	U	< 16		N
1,2,4-Trichlorobenzene	120-82-1	1.9	U	7.9	U	7.4	J	< 17	J	P
2,4,5-Trichlorophenol	95-95-4	6.0	U	17	U	6.3	U	< 29		N
2,4,6-Trichlorophenol	88-06-2	3.7	U	10	U	7.6	U	< 21		N

MM-5 Train Summary - Run 2 Train Totals (Continued)
Semivolatile Organic Compounds Analytical Results Summary
Table A-3. HLLWE Run ID: 0010-STRT-2

Analyte	CAS Registry Number	MM-5 Train Front Half Composite[1] (µg)		MM-5 Train Back Half Composite[2] (µg)		MM-5 Train Condensate Composite[3] (µg)		MM-5 Train Totals[4] (Total µg)		*Project Specific Flag*[7]
		Risk Result	Flag[5]	Risk Result	Flag[5]	Risk Result	Flag[5]	Total[6]	Flag	
TICs[9]										
Furan, 2,5-dimethyl-	625-86-5	9.8		---		---		9.8	N,J,M	P
3-Hexanone	589-38-8	---		96		---		96	N,J,M	P
Heptane, 2,5-dimethyl-	2216-30-0	7.1		---		---		7.1	N,J,M	P
Benzaldehyde	100-52-7	---		670		---		670	N,J,M	P
Formic acid, phenylmethyl este	104-57-4	---		52		---		52	N,J,M	P
Dodecane	112-40-3	---		55		---		55	N,J,M	P
Tridecane	629-50-5	---		18		---		18	N,J,M	P
Naphthalene, 1-methyl-	90-12-0	---		---		7.8		7.8	N,J,M	P
Tetradecane	629-59-4	---		56		---		56	N,J,M	P
Cyclododecane	294-62-2	5.6		---		---		5.6	N,J,M	P
Hexanedioic acid, bis(2-ethylh)	103-23-1	---		---		10		10	N,J,M	P
1,2-Benzenedicarboxylic acid,	1330-96-7	---		---		8.4		8.4	N,J,M	P
Benzo(e)pyrene	192-97-2	---		---		14		14	N,J,M	P

Footnotes:

[1] The MM-5 Train Front Half Composite consists of the Particulate Filter and the Front Half of the Filter Holder and Probe Solvent Rinses.

[2] The MM-5 Train Back Half Composite consists of the XAD-2 Resin Tube and the Back Half of the Filter Holder and Coil Condenser Solvent Rinses.

[3] The MM-5 Train Condensate Composite consists of the Condensate and Impinger Contents and the Glassware Solvent Rinses.

[4] The total mass for each semivolatile compound found in the MM-5 sampling train consists of the sum of the MM-5 train's Front Half Composite contents, the train's Back Half Composite contents, and the Condensate Composite. The calculation is as follows:

(Total μg in the Front Half) + (Total μg in the Back Half) + (Concentration in the Condensate Composite x Condensate Composite Volume)
= Total μg in the MM-5 Sampling Train.

Therefore: (μg) + (μg) + (μg/Liter x Liter) = Total μg

The MM-5 Train Run Total (in Total μg) is the sum of results for the three (3) MM-5 train sample fractions using the following guidelines:

- When the train component analytical result is greater than the laboratory reporting limit (RL), the result included in the train total is the actual analytical result or "hit" determined by the laboratory.
- When the train component analytical result is greater than the reliable detection level (RDL), but less than the laboratory reporting limit (RL), the result included in the train total is actual analytical result or "hit" determined by the laboratory and the corresponding "J" flag is carried through the calculation to the train total.
- When the train analytical component result is less than the RDL, but greater than the method detection limit (MDL), the result included in the train total is the RDL and the corresponding "J" flag is carried through the calculation to the train total.
- When the train component analytical result is not detected down to the MDL, the result included in the train total is the RDL and the corresponding "U" flag is carried through the calculation to the train total.
- It should be noted that when the RDL is selected as the default value using the guidelines above, but the RDL is greater than the RL, the RL is included in the train total.

The data flags attached to the MM-5 Train Total are the cumulative set of flags for each train component included as part of the MM-5 train total. A flag attached to an MM-5 train component is carried through to the "MM-5 Train Total" column when the associated component analytical result is a significant number in comparison to the MM-5 Train Total. That is, if the MM-5 Train Total is affected by an MM-5 train component analytical result, the flag is carried through to the MM-5 Train Total, but if the MM-5 Train Total is not affected by an MM-5 train component, the flag is not carried through to the MM-5 Train Total. The combinations of train fractions are conducted following the standard practice of using significant figures found in ASTM E29-93a(1999), "Standard Practice for Using Significant Digits in Test Data to Determine Conformance with Specifications" and Severn Trent Laboratories standard operating procedure number QA-004, "Rounding and Significant Figures".

[5] This flag is the laboratory data flag that corresponds to EPA guidelines. The data flags for these samples are as follows:

- A "U" qualifier indicates that this analyte was analyzed for, but was not detected down to the MDL.
- A "J" qualifier indicates that this compound was detected, but at a concentration below the laboratory RL. The analytical result is therefore an estimated value.
- A "B" qualifier indicates that this compound was found in the associated laboratory method blank. Under these conditions these values are regarded as estimated values.
- A "D" qualifier indicates that this result was obtained through dilution of the sample. This original analysis yielded a result that exceeded the calibration range.
- An "N" qualifier indicates that this compound is a tentatively identified compound (TIC). Therefore the value is estimated.
- An "E" qualifier indicates that this compound exceeded the calibration range of the instrument.
- An "A" qualifier indicates that this result is an Aldol-condensation product.
- An "M" qualifier indicates that this result was measured against the nearest internal standard and assumed a response factor of one (1).
- A "Q" qualifier indicates that this result was quantitated against the response factor of a calibration standard.

[6] When listed, the less than (<) sign indicates that at least one sample fraction result is either a "non-detect" value down to the MDL of the measurement that carries, or an estimated "hit" value that is below the RDL. In either case, the final value for the fraction that is included in the data set total is the default RDL value and the actual value of the total is known to be less than (<) the displayed result.

[7] Entries in this column are project-specific train total flags that are applied to the run total values and are not standard EPA data flags. These project-specific flags are utilized for the INEEL NWCF HLLWE Effluent Gas Emissions Inventory project and are defined as follows:

- An "N" flag in this column indicates that the compound was not measured (detected) in any of the sampling train components, or fractions.
- A "P" flag in this column indicates that the compound was measured (detected) in one or more of the train components, or fractions, but not in all of the sampling train fractions.
- An "A" flag in this column indicates that the compound was measured (detected) in all of the sampling train components, or fractions.

[8] Bis(2-chloroisopropyl)ether and 2,2'-Oxybis(1-chloropropane) are synonyms.

[9] The tentatively identified compounds (TICs) were identified by conducting a mass spectral library search using the NBS library of data. It should be noted that TICs that give the same mass spectral match for GC peaks at different retention times are listed separately with the same compound identity. Under these conditions the compounds are likely indistinguishable isomers of the same compound. However, insufficient evidence is available to determine unequivocal identities.

MM-5 Train Summary - Run 4 Train Totals
Semivolatile Organic Compounds Analytical Results Summary
Table A-4. HLLWE Run ID: 0010-END-2

Field Sample Name: MM-5 Train
Sample Description: MM-5 Train Totals for Semivolatile Organic Compounds Analysis

Analyte	CAS Registry Number	MM-5 Train Front Half Composite[1] (µg)		MM-5 Train Back Half Composite[2] (µg)		MM-5 Train Condensate Composite[3] (µg)		MM-5 Train Totals[4] (Total µg)		*Project Specific Flag*[7]
		Risk Result	Flag[5]	Risk Result	Flag[5]	Risk Result	Flag[5]	Total[6]	Flag	
Target Compound List										
Acenaphthene	83-32-9	1.3	U	6.6	U	1.9	U	< 9.8		N
Acenaphthylene	208-96-8	1.3	U	6.6	U	1.6	U	< 9.5		N
Acetophenone	9[8-86-2	2.0	U	32	J	2.6	U	< 37	J	P
Aniline	62-53-3	2.5	U	94	U	18	U	< 110		N
Anthracene	120-12-7	1.3	U	6.6	U	1.6	U	< 9.5		N
Benzidine	92-87-5	100	U	500	U	66	U	< 670		N
Benzoic acid	65-85-0	100	U	2,600	E	9.4	U	< 2,700	E	P
Benzo(a)anthracene	56-55-3	2.2	U	7.6	U	1.7	U	< 12		N
Benzo(a)pyrene	50-32-8	2.6	U	130	U	1.8	U	< 130		N
Benzo(b)fluoranthene	205-99-2	3.7	U	290	U	4.2	U	< 300		N
Benzo(g,h,i)perylene	191-24-2	7.3	U	160	U	2.1	U	< 170		N
Benzo(k)fluoranthene	207-08-9	5.5	U	420	U	2.9	U	< 430		N
Benzyl alcohol	100-51-6	92	U	470	U	4.2	U	< 570		N
bis(2-Chloroethoxy)methane	111-91-1	1.5	U	6.6	U	2.0	U	< 10		N
bis(2-Chloroethyl)ether	111-44-4	2.0	U	7.3	U	1.7	U	< 11		N
bis(2-Ethylhexyl)phthalate	117-81-7	57		100	J	6.1	J	< 160	J	A
4-Bromophenyl-phenylether	101-55-3	1.4	U	6.6	U	1.4	U	< 9.4		N
Butylbenzylphthalate	85-68-7	2.9	U	7.9	U	2.3	U	< 13		N
Carbazole	86-74-8	2.0	U	8.4	U	2.2	U	< 13		N
4-Chloro-3-methylphenol	59-50-7	2.6	U	8.1	U	6.6	U	< 17		N
4-Chloroaniline	106-47-8	3.1	U	79	U	7.9	U	< 90		N
2-Chloronaphthalene	91-58-7	1.3	U	6.6	U	1.4	U	< 9.3		N
2-Chlorophenol	95-57-8	2.6	U	6.6	U	1.7	U	< 11		N
4-Chlorophenyl phenyl ether	7005-72-36	1.3	U	6.6	U	3.1	U	< 11		N
Chrysene	218-01-9	2.3	U	8.4	U	1.3	U	< 12		N

MM-5 Train Summary - Run 4 Train Totals (Continued)
Semivolatile Organic Compounds Analytical Results Summary
Table A-4. HLLWE Run ID: 0010-END-2

Analyte	CAS Registry Number	MM-5 Train Front Half Composite[1] (µg)		MM-5 Train Back Half Composite[2] (µg)		MM-5 Train Condensate Composite[3] (µg)		MM-5 Train Totals[4] (Total µg)		*Project Specific Flag*[7]
		Risk Result	Flag[5]	Risk Result	Flag[5]	Risk Result	Flag[5]	Total[6]	Flag	
Di-n-butylphthalate	84-74-2	1.9	J	100	U	2.3	U	< 100	J	P
Di-n-octylphthalate	117-84-0	5.5	J	150	U	2.5	J	< 160	J	P
Dibenz(a,h)anthracene	53-70-3	5.2	U	160	U	2.9	U	< 170		N
Dibenzofuran	132-64-9	1.4	U	6.6	U	2.9	U	< 11		N
1,2-Dichlorobenzene	95-50-1	2.2	U	6.8	U	1.7	U	< 11		N
1,3-Dichlorobenzene	541-73-1	3.1	U	7.3	U	1.4	U	< 12		N
1,4-Dichlorobenzene	106-46-7	2.9	U	16	J	2.0	U	< 21	J	P
3,3'-Dichlorobenzidine	91-94-1	7.1	U	97	U	7.9	U	< 110		N
2,4-Dichlorophenol	120-83-2	3.9	U	6.6	U	2.3	U	< 13		N
Diethylphthalate	84-66-2	3.9	U	9.4	U	1.4	U	< 15		N
Dimethyl phthalate	131-11-3	1.7	U	6.6	U	1.3	U	< 9.6		N
2,4-Dimethylphenol	105-67-9	7.6	U	50	U	1.5	U	< 59		N
4,6-Dinitro-2-methylphenol	534-52-1	13	U	120	U	1.5	U	< 130		N
2,4-Dinitrophenol	51-28-5	16	U	250	U	3.9	U	< 270		N
2,4-Dinitrotoluene	121-14-2	4.2	U	6.6	U	2.6	U	< 13		N
2,6-Dinitrotoluene	606-20-2	3.4	U	6.6	U	2.1	U	< 12		N
1,2-Diphenylhydrazine	122-66-7	1.7	U	6.6	U	1.5	U	< 9.8		N
Fluoranthene	206-44-0	1.3	U	7.1	U	1.8	U	< 10		N
Fluorene	86-73-7	1.3	U	6.6	U	2.6	U	< 10		N
Hexachlorocyclopentadiene	77-47-4	26	U	130	U	6.6	U	< 160		N
Hexachlorobenzene	118-74-1	1.5	U	6.6	U	2.6	U	< 11		N
Hexachlorobutadiene	87-68-3	3.7	U	9.7	U	1.9	U	< 15		N
Hexachloroethane	67-72-1	6.6	U	7.1	U	1.9	U	< 16		N
Indeno(1,2,3-cd)pyrene	193-39-5	5.5	U	140	U	2.3	U	< 150		N
Isophorone	78-59-1	1.7	U	6.6	U	1.8	U	< 10		N
2-Methylnaphthalene	91-57-6	1.5	U	6.6	U	2.3	U	< 10		N
2-Methylphenol	95-48-7	6.0	U	39	U	2.1	U	< 47		N
3-Methylphenol & 4-Methylphenol	65794-96-9	6.0	U	26	U	2.2	U	< 34		N

MM-5 Train Summary - Run 4 Train Totals (Continued)
Semivolatile Organic Compounds Analytical Results Summary
Table A-4. HLLWE Run ID: 0010-END-2

Analyte	CAS Registry Number	MM-5 Train Front Half Composite[1] (µg)		MM-5 Train Back Half Composite[2] (µg)		MM-5 Train Condensate Composite[3] (µg)		MM-5 Train Totals[4] (Total µg)		*Project Specific Flag*[7]
		Risk Result	Flag[5]	Risk Result	Flag[5]	Risk Result	Flag[5]	Total[6]	Flag	
N-Nitroso-di-n-propylamine	621-64-7	1.9	U	6.6	U	2.3	U	< 11		N
N-Nitrosodimethylamine	62-75-9	1.9	U	6.6	U	2.2	U	< 11		N
N-Nitrosodiphenylamine	86-30-6	1.6	U	12	U	1.4	U	< 15		N
Naphthalene	91-20-3	1.3	U	7.9	U	1.8	U	< 11		N
2-Nitroaniline	88-74-4	1.5	U	6.6	U	2.9	U	< 11		N
3-Nitroaniline	99-09-2	10	U	26	U	4.7	U	< 41		N
4-Nitroaniline	100-01-6	6.0	U	26	U	3.9	U	< 36		N
Nitrobenzene	98-95-1	1.9	U	8.5	J	1.7	U	< 12	J	P
2-Nitrophenol	88-75-5	8.4	U	40	J	2.6	U	< 51	J	P
4-Nitrophenol	100-02-7	8.7	U	42	J	3.9	U	< 55	J	P
2,2'-Oxybis(1-chloropropane)[8]	108-60-1	2.6	U	10	U	1.8	U	< 14		N
Pentachlorobenzene	608-93-5	1.4	U	6.6	U	2.3	U	< 10		N
Pentachloronitrobenzene	82-68-8	2.0	U	6.6	U	2.6	U	< 11		N
Pentachlorophenol	87-86-5	50	U	320	U	3.4	U	< 370		N
Phenanthrene	85-01-8	1.3	U	6.6	U	1.9	U	< 9.8		N
Phenol	108-95-2	2.9	U	34	J	2.2	J	< 39	J	P
Pyrene	129-00-0	1.9	U	6.8	U	1.4	U	< 10		N
Pyridine	110-86-1	2.3	U	9.7	U	5.2	U	< 17		N
1,2,4,5-Tetrachlorobenzene	95-94-3	2.3	U	6.6	U	2.2	U	< 11		N
1,2,4-Trichlorobenzene	120-82-1	1.9	U	7.9	U	2.2	U	< 12		N
2,4,5-Trichlorophenol	95-95-4	6.0	U	17	U	2.1	U	< 25		N
2,4,6-Trichlorophenol	88-06-2	3.7	U	10	U	2.5	U	< 16		N

MM-5 Train Summary - Run 4 Train Totals (Continued)
Semivolatile Organic Compounds Analytical Results Summary
Table A-4. HLLWE Run ID: 0010-END-2

Analyte	CAS Registry Number	MM-5 Train Front Half Composite[1] (µg)		MM-5 Train Back Half Composite[2] (µg)		MM-5 Train Condensate Composite[3] (µg)		MM-5 Train Totals[4] (Total µg)		*Project Specific Flag*[7]
		Risk Result	Flag[5]	Risk Result	Flag[5]	Risk Result	Flag[5]	Total[6]	Flag	
TICs[9]										
3-Hexanone	589-38-8	---		70		---		70	N,J,M	P
Benzaldehyde	100-52-7	---		730		---		730	N,J,M	P
2-Cyclohexene-1-one, 3-methyl-	1193-18-6	---		---		3.2		3.2	N,J,M	P
Formic acid, phenylmethyl ester	104-57-4	---		95		---		95	N,J,M	P
Benzaldehyde, ethyl-	53951-50-1	---		61		---		61	N,J,M	P
Dodecane	112-40-3	---		37		---		37	N,J,M	P
Tridecane	629-50-5	---		21		---		21	N,J,M	P
2,4-Hexadiene	592-46-1	---		28		---		28	N,J,M	P
2,5-Diethylphenol	876-20-0	---		100		---		100	N,J,M	P
Tetradecane	629-59-4	---		99		---		99	N,J,M	P
Hexatriacontane	630-06-8	5.7		---		---		5.7	N,J,M	P
Phosphoric acid tributyl ester	126-73-8	24		---		---		24	N,J,M	P
Cyclododecane	294-62-2	13		---		---		13	N,J,M	P
Pentadecane	629-62-9	4.5		---		---		4.5	N,J,M	P
Heneicosane	629-94-7	9.1		---		---		9.1	N,J,M	P
Tetracosane	646-31-1	19		---		---		19	N,J,M	P
Pentacosane	629-99-2	35		---		---		35	N,J,M	P
Hexacosane	630-01-3	64		---		---		64	N,J,M	P
Heptacosane	593-49-7	83		---		---		83	N,J,M	P
Pentacosane	629-99-2	---		---		2.2		2.2	N,J,M	P
Hexatriacontane	630-06-8	100		---		---		100	N,J,M	P
Hexatriacontane	630-06-8	67		---		---		67	N,J,M	P
Hexatriacontane	630-06-8	32		---		---		32	N,J,M	P
Eicosane	112-95-8	19		---		---		19	N,J,M	P
Tetracosane	646-31-1	7.4		---		---		7.4	N,J,M	P

Footnotes:

[1] The MM-5 Train Front Half Composite consists of the Particulate Filter and the Front Half of the Filter Holder and Probe Solvent Rinses.

[2] The MM-5 Train Back Half Composite consists of the XAD-2 Resin Tube and the Back Half of the Filter Holder and Coil Condenser Solvent Rinses.

[3] The MM-5 Train Condensate Composite consists of the Condensate and Impinger Contents and the Glassware Solvent Rinses.

[4] The total mass for each semivolatile compound found in the MM-5 sampling train consists of the sum of the MM-5 train's Front Half Composite contents, the train's Back Half Composite contents, and the Condensate Composite. The calculation is as follows:

(Total μg in the Front Half) + (Total μg in the Back Half) + (Concentration in the Condensate Composite x Condensate Composite Volume)
= Total μg in the MM-5 Sampling Train.

Therefore: (μg) + (μg) + (μg/Liter x Liter) = Total μg

The MM-5 Train Run Total (in Total μg) is the sum of results for the three (3) MM-5 train sample fractions using the following guidelines:

- When the train component analytical result is greater than the laboratory reporting limit (RL), the result included in the train total is the actual analytical result or "hit" determined by the laboratory.
- When the train component analytical result is greater than the reliable detection level (RDL), but less than the laboratory reporting limit (RL), the result included in the train total is actual analytical result or "hit" determined by the laboratory and the corresponding "J" flag is carried through the calculation to the train total.
- When the train analytical component result is less than the RDL, but greater than the method detection limit (MDL), the result included in the train total is the RDL and the corresponding "J" flag is carried through the calculation to the train total.
- When the train component analytical result is not detected down to the MDL, the result included in the train total is the RDL and the corresponding "U" flag is carried through the calculation to the train total.
- It should be noted that when the RDL is selected as the default value using the guidelines above, but the RDL is greater than the RL, the RL is included in the train total.

The data flags attached to the MM-5 Train Total are the cumulative set of flags for each train component included as part of the MM-5 train total. A flag attached to an MM-5 train component is carried through to the "MM-5 Train Total" column when the associated component analytical result is a significant number in comparison to the MM-5 Train Total. That is, if the MM-5 Train Total is affected by an MM-5 train component analytical result, the flag is carried through to the MM-5 Train Total, but if the MM-5 Train Total is not affected by an MM-5 train component, the flag is not carried through to the MM-5 Train Total. The combinations of train fractions are conducted following the standard practice of using significant figures found in ASTM E29-93a(1999), "Standard Practice for Using Significant Digits in Test Data to Determine Conformance with Specifications" and Severn Trent Laboratories standard operating procedure number QA-004, "Rounding and Significant Figures".

[5] This flag is the laboratory data flag that corresponds to EPA guidelines. The data flags for these samples are as follows:

- A "U" qualifier indicates that this analyte was analyzed for, but was not detected down to the MDL.
- A "J" qualifier indicates that this compound was detected, but at a concentration below the laboratory RL. The analytical result is therefore an estimated value.
- A "B" qualifier indicates that this compound was found in the associated laboratory method blank. Under these conditions these values are regarded as estimated values.
- A "D" qualifier indicates that this result was obtained through dilution of the sample. This original analysis yielded a result that exceeded the calibration range.
- An "N" qualifier indicates that this compound is a tentatively identified compound (TIC). Therefore the value is estimated.
- An "E" qualifier indicates that this compound exceeded the calibration range of the instrument.
- An "A" qualifier indicates that this result is an Aldol-condensation product.
- An "M" qualifier indicates that this result was measured against the nearest internal standard and assumed a response factor of one (1).

[6] When listed, the less than (<) sign indicates that at least one sample fraction result is either a "non-detect" value down to the MDL of the measurement that carries, or an estimated "hit" value that is below the RDL. In either case, the final value for the fraction that is included in the data set total is the default RDL value and the actual value of the total is known to be less than (<) the displayed result.

[7] Entries in this column are project-specific train total flags that are applied to the run total values and are not standard EPA data flags. These project-specific flags are utilized for the INEEL NWCF HLLWE Effluent Gas Emissions Inventory project and are defined as follows:

- An "N" flag in this column indicates that the compound was not measured (detected) in any of the sampling train components, or fractions.
- A "P" flag in this column indicates that the compound was measured (detected) in one or more of the train components, or fractions, but not in all of the sampling train fractions.
- An "A" flag in this column indicates that the compound was measured (detected) in all of the sampling train components, or fractions.

[8] Bis(2-chloroisopropyl)ether and 2,2'-Oxybis(1-chloropropane) are synonyms.

[9] The tentatively identified compounds (TICs) were identified by conducting a mass spectral library search using the NBS library of data. It should be noted that TICs that give the same mass spectral match for GC peaks at different retention times are listed separately with the same compound identity. Under these conditions the compounds are likely indistinguishable isomers of the same compound. However, insufficient evidence is available to determine unequivocal identities.

MM-5 Blank Train Summary - Run 2 Train Totals
Semivolatile Organic Compounds Analytical Results Summary
Table A-5. HLLWE Run ID: 0010-BT-1

Field Sample Name: MM-5 Blank Train
Sample Description: MM-5 Blank Train Totals for Semivolatile Organic Compounds Analysis

Analyte	CAS Registry Number	MM-5 Train Front Half Composite[1] (µg)		MM-5 Train Back Half Composite[2] (µg)		MM-5 Train Condensate Composite[3] (µg)		MM-5 Train Totals[4] (Total µg)		*Project Specific Flag*[7]
		Risk Result	Flag[5]	Risk Result	Flag[5]	Risk Result	Flag[5]	Total[6]	Flag	
Target Compound List										
Acenaphthene	83-32-9	1.3	U	1.3	U	1.9	U	< 4.5		N
Acenaphthylene	208-96-8	1.3	U	1.3	U	1.6	U	< 4.2		N
Acetophenone	9[8-86-2	2.0	U	6.3	J	2.6	U	< 11	J	P
Aniline	62-53-3	2.5	U	19	U	18	U	< 40		N
Anthracene	120-12-7	1.3	U	1.3	U	1.6	U	< 4.2		N
Benzidine	92-87-5	100	U	100	U	66	U	< 270		N
Benzoic acid	65-85-0	100	U	100	U	9.4	U	< 210		N
Benzo(a)anthracene	56-55-3	2.2	U	1.5	U	1.7	U	< 5.4		N
Benzo(a)pyrene	50-32-8	2.6	U	1.3	U	1.8	U	< 5.7		N
Benzo(b)fluoranthene	205-99-2	3.7	U	2.9	U	4.2	U	< 11		N
Benzo(g,h,i)perylene	191-24-2	7.3	U	1.6	U	2.1	U	< 11		N
Benzo(k)fluoranthene	207-08-9	5.5	U	4.2	U	2.9	U	< 13		N
Benzyl alcohol	100-51-6	92	U	92	U	4.2	U	< 190		N
bis(2-Chloroethoxy)methane	111-91-1	1.5	U	1.3	U	2.0	U	< 4.8		N
bis(2-Chloroethyl)ether	111-44-4	2.0	U	1.5	U	1.7	U	< 5.2		N
bis(2-Ethylhexyl)phthalate	117-81-7	15		99		15		130		A
4-Bromophenyl-phenylether	101-55-3	1.4	U	1.3	U	1.4	U	< 4.1		N
Butylbenzylphthalate	85-68-7	2.9	U	1.6	U	2.3	U	< 6.8		N
Carbazole	86-74-8	2.0	U	1.7	U	2.2	U	< 5.9		N
4-Chloro-3-methylphenol	59-50-7	2.6	U	1.6	U	6.6	U	< 11		N
4-Chloroaniline	106-47-8	3.1	U	16	U	7.9	U	< 27		N
2-Chloronaphthalene	91-58-7	1.3	U	1.3	U	1.4	U	< 4.0		N
2-Chlorophenol	95-57-8	2.6	U	1.3	U	1.7	U	< 5.6		N
4-Chlorophenyl phenyl ether	7005-72-36	1.3	U	1.3	U	3.1	U	< 5.7		N
Chrysene	218-01-9	2.3	U	1.7	U	1.3	U	< 5.3		N

MM-5 Blank Train Summary - Run 2 Train Totals (Continued)
Semivolatile Organic Compounds Analytical Results Summary
Table A-5. HLLWE Run ID: 0010-BT-1

Analyte	CAS Registry Number	MM-5 Train Front Half Composite[1] (µg)		MM-5 Train Back Half Composite[2] (µg)		MM-5 Train Condensate Composite[3] (µg)		MM-5 Train Totals[4] (Total µg)		*Project Specific Flag*[7]
		Risk Result	Flag[5]	Risk Result	Flag[5]	Risk Result	Flag[5]	Total[6]	Flag	
Di-n-butylphthalate	84-74-2	1.9	J	20	U	2.3	J	< 24	J	P
Di-n-octylphthalate	117-84-0	5.5	J	10		3.3	J	< 19	J	A
Dibenz(a,h)anthracene	53-70-3	5.2	U	1.6	U	2.9	U	< 9.7		N
Dibenzofuran	132-64-9	1.4	U	1.3	U	2.9	U	< 5.6		N
1,2-Dichlorobenzene	95-50-1	2.2	U	1.3	U	1.7	U	< 5.2		N
1,3-Dichlorobenzene	541-73-1	3.1	U	1.5	U	1.4	U	< 6.0		N
1,4-Dichlorobenzene	106-46-7	2.9	U	12		2.0	U	< 17		P
3,3'-Dichlorobenzidine	91-94-1	7.1	U	19	U	7.9	U	< 34		N
2,4-Dichlorophenol	120-83-2	3.9	U	1.3	U	2.3	U	< 7.5		N
Diethylphthalate	84-66-2	3.9	U	1.9	U	1.4	U	< 7.2		N
Dimethyl phthalate	131-11-3	1.7	U	1.3	U	1.3	U	< 4.3		N
2,4-Dimethylphenol	105-67-9	7.6	U	10	U	1.5	U	< 19		N
4,6-Dinitro-2-methylphenol	534-52-1	13	U	23	U	1.5	U	< 38		N
2,4-Dinitrophenol	51-28-5	15	U	50	U	3.9	U	< 69		N
2,4-Dinitrotoluene	121-14-2	4.2	U	1.3	U	2.6	U	< 8.1		N
2,6-Dinitrotoluene	606-20-2	3.4	U	1.3	U	2.1	U	< 6.8		N
1,2-Diphenylhydrazine	122-66-7	1.7	U	1.3	U	1.5	U	< 4.5		N
Fluoranthene	206-44-0	1.3	U	1.4	U	1.8	U	< 4.5		N
Fluorene	86-73-7	1.3	U	1.3	U	2.6	U	< 5.2		N
Hexachlorocyclopentadiene	77-47-4	26	U	26	U	6.6	U	< 59		N
Hexachlorobenzene	118-74-1	1.5	U	1.3	U	2.6	U	< 5.4		N
Hexachlorobutadiene	87-68-3	3.7	U	1.9	U	1.9	U	< 7.5		N
Hexachloroethane	67-72-1	6.6	U	1.4	U	1.9	U	< 9.9		N
Indeno(1,2,3-cd)pyrene	193-39-5	5.5	U	1.4	U	2.3	U	< 9.2		N
Isophorone	78-59-1	1.7	U	1.3	U	1.8	U	< 4.8		N
2-Methylnaphthalene	91-57-6	1.5	U	1.3	U	2.3	U	< 5.1		N
2-Methylphenol	95-48-7	6.0	U	7.9	U	2.1	U	< 16		N
3-Methylphenol & 4-Methylphenol	65794-96-9	6.0	U	5.2	U	2.2	U	< 13		N

MM-5 Blank Train Summary - Run 2 Train Totals (Continued)
Semivolatile Organic Compounds Analytical Results Summary
Table A-5. HLLWE Run ID: 0010-BT-1

Analyte	CAS Registry Number	MM-5 Train Front Half Composite[1] (µg)		MM-5 Train Back Half Composite[2] (µg)		MM-5 Train Condensate Composite[3] (µg)		MM-5 Train Totals[4] (Total µg)		*Project Specific Flag*[7]
		Risk Result	Flag[5]	Risk Result	Flag[5]	Risk Result	Flag[5]	Total[6]	Flag	
N-Nitroso-di-n-propylamine	621-64-7	1.9	U	1.3	U	2.3	U	< 5.5		N
N-Nitrosodimethylamine	62-75-9	1.9	U	1.3	U	2.2	U	< 5.4		N
N-Nitrosodiphenylamine	86-30-6	1.6	U	2.3	U	1.4	U	< 5.3		N
Naphthalene	91-20-3	1.3	U	1.6	J	1.8	U	< 4.7	J	P
2-Nitroaniline	88-74-4	1.5	U	1.3	U	2.9	U	< 5.7		N
3-Nitroaniline	99-09-2	10	U	5.2	U	4.7	U	< 20		N
4-Nitroaniline	100-01-6	6.0	U	5.2	U	3.9	U	< 15		N
Nitrobenzene	98-95-1	1.9	U	1.5	U	1.7	U	< 5.1		N
2-Nitrophenol	88-75-5	8.4	U	1.3	U	2.6	U	< 12		N
4-Nitrophenol	100-02-7	8.7	U	8.7	U	3.9	U	< 21		N
2,2'-Oxybis(1-chloropropane)[8]	108-60-1	2.6	U	2.0	U	1.8	U	< 6.4		N
Pentachlorobenzene	608-93-5	1.4	U	1.3	U	2.3	U	< 5.0		N
Pentachloronitrobenzene	82-68-8	2.0	U	1.3	U	2.6	U	< 5.9		N
Pentachlorophenol	87-86-5	50	U	50	U	3.4	U	< 100		N
Phenanthrene	85-01-8	1.3	U	1.3	U	1.9	U	< 4.5		N
Phenol	108-95-2	2.9	U	2.4	U	2.2	U	< 7.5		N
Pyrene	129-00-0	1.9	U	1.4	U	1.4	U	< 4.7		N
Pyridine	110-86-1	2.3	U	1.9	U	5.2	U	< 9.4		N
1,2,4,5-Tetrachlorobenzene	95-94-3	2.3	U	1.3	U	2.2	U	< 5.8		N
1,2,4-Trichlorobenzene	120-82-1	1.9	U	1.5	U	2.2	U	< 5.6		N
2,4,5-Trichlorophenol	95-95-4	6.0	U	3.4	U	2.1	U	< 12		N
2,4,6-Trichlorophenol	88-06-2	3.7	U	2.0	U	2.5	U	< 8.2		N

MM-5 Blank Train Summary - Run 2 Train Totals (Continued)
Semivolatile Organic Compounds Analytical Results Summary
Table A-5. HLLWE Run ID: 0010-BT-1

Analyte	CAS Registry Number	MM-5 Train Front Half Composite[1] (µg)		MM-5 Train Back Half Composite[2] (µg)		MM-5 Train Condensate Composite[3] (µg)		MM-5 Train Totals[4] (Total µg)		*Project Specific Flag*[7]
		Risk Result	Flag[5]	Risk Result	Flag[5]	Risk Result	Flag[5]	Total[6]	Flag	
TICs[9]										
Furan, 2,5-dimethyl-	625-86-5	12	---	---		---		12	N,J,M	P
Heptane, 2,5-dimethyl-	2216-30-0	9.0	---	---		---		9.0	N,J,M	P
Heptane, 2,3-dimethyl-	3074-71-3	11	---	---		---		11	N,J,M	P
Benzaldehyde	100-52-7	---		7.3		---		7.3	N,J,M	P
Benzoic acid, methyl ester	93-58-3	---		8.4		---		8.4	N,J,M	P
Benzaldehyde, ethyl-	53951-50-1	---		14		---		14	N,J,M	P
Pentadecane	629-62-9	4.4		---		---		4.4	N,J,M	P
Cyclododecane	294-62-2	11		8.7		10		30	N,J,M	P
Heptadecane	629-78-7	3.0		---		---		3.0	N,J,M	P
Eicosane	112-95-8	---		---		3.7		3.7	N,J,M	P
Heneicosane	629-94-7	---		4.5		---		4.5	N,J,M	P
Octodecane	593-45-3	---		10		---		10	N,J,M	P
Phosphine oxide, triphenyl-	791-28-6	---		---		26		26	N,J,M	P
Nonacosane	630-03-5	---		10		---		10	N,J,M	P
Eicosane	112-95-8	---		14		---		14	N,J,M	P
Hexatriacontane	630-06-8	---		23		---		23	N,J,M	P
Tetracosane	646-31-1	---		18		---		18	N,J,M	P
Heneicosane	629-94-7	---		---		3.6		3.6	N,J,M	P
Tetratriacontane	14167-59-0	---		11		---		11	N,J,M	P
Eicosane	112-95-8	---		9.2		---		9.2	N,J,M	P

Footnotes:

[1] The MM-5 Train Front Half Composite consists of the Particulate Filter and the Front Half of the Filter Holder and Probe Solvent Rinses.

[2] The MM-5 Train Back Half Composite consists of the XAD-2 Resin Tube and the Back Half of the Filter Holder and Coil Condenser Solvent Rinses.

[3] The MM-5 Train Condensate Composite consists of the Condensate and Impinger Contents and the Glassware Solvent Rinses.

[4] The total mass for each semivolatile compound found in the MM-5 sampling train consists of the sum of the MM-5 train's Front Half Composite contents, the train's Back Half Composite contents, and the Condensate Composite. The calculation is as follows:

(Total μg in the Front Half) + (Total μg in the Back Half) + (Concentration in the Condensate Composite x Condensate Composite Volume)
= Total μg in the MM-5 Sampling Train.

Therefore: (μg) + (μg) + (μg/Liter x Liter) = Total μg

The MM-5 Train Run Total (in Total μg) is the sum of results for the three (3) MM-5 train sample fractions using the following guidelines:

- When the train component analytical result is greater than the laboratory reporting limit (RL), the result included in the train total is the actual analytical result or "hit" determined by the laboratory.
- When the train component analytical result is greater than the reliable detection level (RDL), but less than the laboratory reporting limit (RL), the result included in the train total is actual analytical result or "hit" determined by the laboratory and the corresponding "J" flag is carried through the calculation to the train total.
- When the train analytical component result is less than the RDL, but greater than the method detection limit (MDL), the result included in the train total is the RDL and the corresponding "J" flag is carried through the calculation to the train total.
- When the train component analytical result is not detected down to the MDL, the result included in the train total is the RDL and the corresponding "U" flag is carried through the calculation to the train total.
- It should be noted that when the RDL is selected as the default value using the guidelines above, but the RDL is greater than the RL, the RL is included in the train total.

The data flags attached to the MM-5 Train Total are the cumulative set of flags for each train component included as part of the MM-5 train total. A flag attached to an MM-5 train component is carried through to the "MM-5 Train Total" column when the associated component analytical result is a significant number in comparison to the MM-5 Train Total. That is, if the MM-5 Train Total is affected by an MM-5 train component analytical result, the flag is carried through to the MM-5 Train Total, but if the MM-5 Train Total is not affected by an MM-5 train component, the flag is not carried through to the MM-5 Train Total. The combinations of train fractions are conducted following the standard practice of using significant figures found in ASTM E29-93a(1999), "Standard Practice for Using Significant Digits in Test Data to Determine Conformance with Specifications" and Severn Trent Laboratories standard operating procedure number QA-004, "Rounding and Significant Figures".

[5] This flag is the laboratory data flag that corresponds to EPA guidelines. The data flags for these samples are as follows:

- A "U" qualifier indicates that this analyte was analyzed for, but was not detected down to the MDL.
- A "J" qualifier indicates that this compound was detected, but at a concentration below the laboratory RL. The analytical result is therefore an estimated value.
- A "B" qualifier indicates that this compound was found in the associated laboratory method blank. Under these conditions these values are regarded as estimated values.
- A "D" qualifier indicates that this result was obtained through dilution of the sample. This original analysis yielded a result that exceeded the calibration range.
- An "N" qualifier indicates that this compound is a tentatively identified compound (TIC). Therefore the value is estimated.
- An "E" qualifier indicates that this compound exceeded the calibration range of the instrument.
- An "A" qualifier indicates that this result is an Aldol-condensation product.
- An "M" qualifier indicates that this result was measured against the nearest internal standard and assumed a response factor of one (1).

[6] When listed, the less than (<) sign indicates that at least one sample fraction result is either a "non-detect" value down to the MDL of the measurement that carries, or an estimated "hit" value that is below the RDL. In either case, the final value for the fraction that is included in the data set total is the default RDL value and the actual value of the total is known to be less than (<) the displayed result.

[7] Entries in this column are project-specific train total flags that are applied to the run total values and are not standard EPA data flags. These project-specific flags are utilized for the INEEL NWCF HLLWE Effluent Gas Emissions Inventory project and are defined as follows:

- An "N" flag in this column indicates that the compound was not measured (detected) in any of the sampling train components, or fractions.
- A "P" flag in this column indicates that the compound was measured (detected) in one or more of the train components, or fractions, but not in all of the sampling train fractions.
- An "A" flag in this column indicates that the compound was measured (detected) in all of the sampling train components, or fractions.

[8] Bis(2-chloroisopropyl)ether and 2,2'-Oxybis(1-chloropropane) are synonyms.

[9] The tentatively identified compounds (TICs) were identified by conducting a mass spectral library search using the NBS library of data. It should be noted that TICs that give the same mass spectral match for GC peaks at different retention times are listed separately with the same compound identity. Under these conditions the compounds are likely indistinguishable isomers of the same compound. However, insufficient evidence is available to determine unequivocal identities.

MM-5 Train Analytical Results Summary
Table A-6. Run 2, XAD-2 Resin Tube Trip Blank/Reagent Blank

Field Sample Name: MM-5 Train XAD-2 Resin Tube Trip Blank/Reagent Blank
Sample Description: MM-5 Train XAD-2 Resin Tube Trip Blank/Reagent Blank for Semivolatile Organic Compounds Analysis
Field Sample ID: A-3378
STL Sample No. H1F250162-007

Analyte	CAS Registry Number	MM-5 Train XAD-2 Resin Tube Trip Blank/Reagent Blank (µg) [1]					
		Lab Result[2]	MDL[3]	RDL[4]	RL[5]	Risk Result	Flag[6]
Acenaphthene	83-32-9	ND	0.50	**1.3**	10	< 1.3	
Acenaphthylene	208-96-8	ND	0.50	**1.3**	10	< 1.3	
Acetophenone	98-86-2	2.7	2.4	**6.3**	10	6.3	J
Aniline	62-53-3	ND	7.3	**19**	20	< 19	
Anthracene	120-12-7	ND	0.50	**1.3**	10	< 1.3	
Benzidine	92-87-5	ND	51	130	**100**	< 100	
Benzoic acid	65-85-0	ND	46	120	**100**	< 100	
Benzo(a)anthracene	56-55-3	ND	0.58	**1.5**	10	< 1.5	
Benzo(a)pyrene	50-32-8	ND	0.50	**1.3**	10	< 1.3	
Benzo(b)fluoranthene	205-99-2	ND	1.1	**2.9**	10	< 2.9	
Benzo(g,h,i)perylene	191-24-2	ND	0.62	**1.6**	10	< 1.6	
Benzo(k)fluoranthene	207-08-9	ND	1.6	**4.2**	10	< 4.2	
Benzyl alcohol	100-51-6	ND	35	**92**	100	< 92	
bis(2-Chloroethoxy)methane	111-91-1	ND	0.50	**1.3**	10	< 1.3	
bis(2-Chloroethyl)ether	111-44-4	ND	0.56	**1.5**	10	< 1.5	
bis(2-Ethylhexyl)phthalate	117-81-7	ND	10	26	**20**	< 20	
4-Bromophenyl-phenylether	101-55-3	ND	0.50	**1.3**	10	< 1.3	
Butylbenzylphthalate	85-68-7	ND	0.61	**1.6**	10	< 1.6	
Carbazole	86-74-8	ND	0.64	**1.7**	10	< 1.7	
4-Chloro-3-methylphenol	59-50-7	ND	0.62	**1.6**	10	< 1.6	
4-Chloroaniline	106-47-8	ND	6.0	**16**	20	< 16	
2-Chloronaphthalene	91-58-7	ND	0.50	**1.3**	10	< 1.3	
2-Chlorophenol	95-57-8	ND	0.50	**1.3**	10	< 1.3	
4-Chlorophenyl phenyl ether	7005-72-36	ND	0.50	**1.3**	10	< 1.3	
Chrysene	218-01-9	ND	0.64	**1.7**	10	< 1.7	

MM-5 Train Analytical Results Summary (Continued)
Table A-6. Run 2, XAD-2 Resin Tube Trip Blank/Reagent Blank

Analyte	CAS Registry Number	MM-5 Train XAD-2 Resin Tube Trip Blank/Reagent Blank (µg) [1]					
		Lab Result [2]	MDL [3]	RDL [4]	RL [5]	Risk Result	Flag [6]
Di-n-butylphthalate	84-74-2	ND	10	26	**20**	< 20	
Di-n-octylphthalate	117-84-0	ND	0.56	**1.5**	10	< 1.5	
Dibenz(a,h)anthracene	53-70-3	ND	0.60	**1.6**	10	< 1.6	
Dibenzofuran	132-64-9	ND	0.50	**1.3**	10	< 1.3	
1,2-Dichlorobenzene	95-50-1	ND	0.51	**1.3**	10	< 1.3	
1,3-Dichlorobenzene	541-73-1	ND	0.57	**1.5**	10	< 1.5	
1,4-Dichlorobenzene	106-46-7	**9.0**	0.53	1.4	10	9.0	J
3,3'-Dichlorobenzidine	91-94-1	ND	7.4	**19**	50	< 19	
2,4-Dichlorophenol	120-83-2	ND	0.50	**1.3**	10	< 1.3	
Diethylphthalate	84-66-2	ND	0.73	**1.9**	10	< 1.9	
Dimethyl phthalate	131-11-3	ND	0.50	**1.3**	10	< 1.3	
2,4-Dimethylphenol	105-67-9	ND	6.3	16	**10**	< 10	
4,6-Dinitro-2-methylphenol	534-52-1	ND	8.7	**23**	50	< 23	
2,4-Dinitrophenol	51-28-5	ND	22	58	**50**	< 50	
2,4-Dinitrotoluene	121-14-2	ND	0.50	**1.3**	10	< 1.3	
2,6-Dinitrotoluene	606-20-2	ND	0.50	**1.3**	10	< 1.3	
1,2-Diphenylhydrazine	122-66-7	ND	0.50	1.3	10	< 1.3	
Fluoranthene	206-44-0	ND	0.54	**1.4**	10	< 1.4	
Fluorene	86-73-7	ND	0.50	**1.3**	10	< 1.3	
Hexachlorocyclopentadiene	77-47-4	ND	10	**26**	50	< 26	
Hexachlorobenzene	118-74-1	ND	0.50	**1.3**	10	< 1.3	
Hexachlorobutadiene	87-68-3	ND	0.74	**1.9**	10	< 1.9	
Hexachloroethane	67-72-1	ND	0.54	**1.4**	10	< 1.4	
Indeno(1,2,3-cd)pyrene	193-39-5	ND	0.54	**1.4**	10	< 1.4	
Isophorone	78-59-1	ND	0.50	**1.3**	10	< 1.3	
2-Methylnaphthalene	91-57-6	ND	0.50	**1.3**	10	< 1.3	
2-Methylphenol	95-48-7	ND	3.0	**7.9**	10	< 7.9	
3-Methylphenol & 4-Methylphenol	65794-96-9	ND	2.0	**5.2**	10	< 5.2	

MM-5 Train Analytical Results Summary (Continued)
Table A-6. Run 2, XAD-2 Resin Tube Trip Blank/Reagent Blank

Analyte	CAS Registry Number	MM-5 Train XAD-2 Resin Tube Trip Blank/Reagent Blank (µg) [1]					
		Lab Result [2]	MDL [3]	RDL [4]	RL [5]	Risk Result	Flag [6]
N-Nitroso-di-n-propylamine	621-64-7	ND	0.50	**1.3**	10	< 1.3	
N-Nitrosodimethylamine	62-75-9	ND	0.50	**1.3**	10	< 1.3	
N-Nitrosodiphenylamine	86-30-6	ND	0.87	**2.3**	10	< 2.3	
Naphthalene	91-20-3	ND	0.60	**1.6**	10	< 1.6	
2-Nitroaniline	88-74-4	ND	0.50	**1.3**	50	< 1.3	
3-Nitroaniline	99-09-2	ND	2.0	**5.2**	50	< 5.2	
4-Nitroaniline	100-01-6	ND	2.0	**5.2**	50	< 5.2	
Nitrobenzene	98-95-1	ND	0.57	**1.5**	10	< 1.5	
2-Nitrophenol	88-75-5	ND	0.50	**1.3**	10	< 1.3	
4-Nitrophenol	100-02-7	ND	3.3	**8.7**	50	< 8.7	
2,2'-Oxybis(1-chloropropane) [7]	108-60-1	ND	0.76	**2.0**	10	< 2.0	
Pentachlorobenzene	608-93-5	ND	0.50	**1.3**	10	< 1.3	
Pentachloronitrobenzene	82-68-8	ND	0.50	**1.3**	50	< 1.3	
Pentachlorophenol	87-86-5	ND	25	66	**50**	< 50	
Phenanthrene	85-01-8	ND	0.50	**1.3**	10	< 1.3	
Phenol	108-95-2	ND	0.90	**2.4**	10	< 2.4	
Pyrene	129-00-0	ND	0.53	**1.4**	10	< 1.4	
Pyridine	110-86-1	ND	0.74	**1.9**	20	< 1.9	
1,2,4,5-Tetrachlorobenzene	95-94-3	ND	0.50	**1.3**	10	< 1.3	
1,2,4-Trichlorobenzene	120-82-1	ND	0.59	**1.5**	10	< 1.5	
2,4,5-Trichlorophenol	95-95-4	ND	1.3	**3.4**	10	< 3.4	
2,4,6-Trichlorophenol	88-06-2	ND	0.75	**2.0**	10	< 2.0	

MM-5 Train Analytical Results Summary (Continued)
Table A-6. Run 2, XAD-2 Resin Tube Trip Blank/Reagent Blank

Sampling Surrogate Recoveries:

Sampling Surrogate Compound[8]	Percent Recovery (%)	Project Target Recovery Limits (%)
$^{13}C_6$-Naphthalene	66%	50-150%

Surrogate Standard Recoveries:

Surrogate Standard Compound	Percent Recovery (%)	Laboratory Recovery Limits (%)
2-Fluorophenol	55%	19-100%
Phenol- d_5	61%	15-124%
Nitrobenzene-d_5	63%	35-122%
2-Fluorobiphenyl	67%	34-115%
2,4,6-Tribromophenol	0.0%[9]	33-130%
Terphenyl-d_{14}	84%	28-132%

Sample Collection and Analysis Dates:

Date(s) Collected: June 21, 2001
Date(s) of Extraction: June 26, 2001
Date(s) of Analysis: July 02, 2001

Preparation and Analysis Methods:

SW-846 Method 0010: "Modified Method 5 Sampling Train"
SW-846 Method 3542: "Extraction of Semivolatile Analytes Collected Using Method 0010 (Modified Method 5 Sampling Train)"
SW-846 Method 8270C: "Semivolatile Organic Compounds by Gas Chromatography/Mass Spectrometry (GC/MS) Capillary Column Technique"

MM-5 Train
Table A-6. Run 2, XAD-2 Resin Tube Trip Blank/Reagent Blank Tentatively Identified Compound (TIC) Summary

TICs[10]	CAS Registry Number	Approximate Retention Time (min.)	Sample Result (µg)	TIC Flag
Benzaldehyde	100-52-7	3.60	5.3	N,J,M
Benzoic acid, methyl ester	93-58-3	4.72	6.5	N,J,M
Benzaldehyde, ethyl-	53951-50-1	5.40	4.6	N,J,M
Heptacosane	593-49-7	11.48	3.1	N,J,M
Heneicosane	629-94-7	11.73	5.8	N,J,M
Tetratracontane	7098-22-8	11.96	8.5	N,J,M
Hexatriacontane	630-06-8	12.19	8.9	N,J,M
Hexatriacontane	630-06-8	12.41	8.2	N,J,M
Heneicosane	629-94-7	12.64	14	N,J,M
Heptacosane	593-49-7	12.90	9.1	N,J,M

MM-5 Train Analytical Results Summary
Table A-6. Run 2, XAD-2 Resin Tube Trip Blank/Reagent Blank (Continued)

Footnotes:

[1] Based on the selection rules, the **bolded** value is the value or default value assigned to the analyte using the following guidelines:

- When the analytical result is greater than the laboratory reporting limit (RL), the result selected by boldface type is the actual analytical result or "hit" determined by the laboratory.
- When the analytical result is greater than the reliable detection level (RDL), but less than the laboratory reporting limit (RL), the result selected by boldface type is the actual analytical result or "hit" determined by the laboratory.
- When the analytical result is less than the RDL, but greater than the method detection limit (MDL), the result selected by boldface type is the RDL.
- When the analytical result is not detected down to the MDL, the result selected by boldface type is the RDL.
- It should be noted that when the RDL is selected using the guidelines above, but the RL is less than the RDL, the RL is included as the "Risk Result".

[2] This value is the laboratory sample result. When the analytical result is "ND" or not detected, the laboratory analysis did not detect the analyte down to the MDL.

[3] This value is the laboratory Method Detection Limit (MDL) derived according to requirements outlined in 40 CFR Part 136, Appendix B.

[4] The RDL is the Reliable Detection Limit. The RDL is the detection level recommended by EPA's National Research Laboratory in Cincinnati, Ohio, Environmental Monitoring Systems Laboratory (EMSL) in Cincinnati, Ohio, American Chemical Society (ACS) Committee on Environmental Improvement and the Drinking Water Standards Division (DWSD). It is defined as 2.623 times the MDL (2.623 X MDL).

[5] The RL is the laboratory Reporting Limit (RL).

[6] This flag is the laboratory data flag that corresponds to EPA guidelines. The data flags for these samples are as follows:

- A "U" qualifier indicates that this analyte was analyzed for, but was not detected down to the MDL.
- A "J" qualifier indicates that this compound was detected, but at a concentration below the laboratory RL. The analytical result is therefore an estimated value.
- A "B" qualifier indicates that this compound was found in the associated laboratory method blank. Under these conditions these values are regarded as estimated values.
- A "D" qualifier indicates that this result was obtained through dilution of the sample. This original analysis yielded a result that exceeded the calibration range.
- An "N" qualifier indicates that this compound is a tentatively identified compound (TIC). Therefore the value is estimated.
- An "E" qualifier indicates that this compound exceeded the calibration range of the instrument.

MM-5 Train Analytical Results Summary
Table A-6. Run 2, XAD-2 Resin Tube Trip Blank/Reagent Blank (Continued)

- An "A" qualifier indicates that this result is an Aldol-condensation product.
- An "M" qualifier indicates that this result was measured against the nearest internal standard and assumed a response factor of one (1).

[7] Bis(2-chloroisopropyl)ether and 2,2'-Oxybis(1-chloropropane) are synonyms.

[8] This material is a sampling surrogate and is an isotopically-labeled compound spiked on the XAD-2 Resin Tube prior to the collection of sample on the MM-5 sampling train.

[9] This percent recovery is outside of the laboratory target recovery range.

[10] The tentatively identified compounds (TICs) were identified by conducting a mass spectral library search using the NBS library of data. It should be noted that TICs that give the same mass spectral match for GC peaks at different retention times are listed separately with the same compound identity. Under these conditions the compounds are likely indistinguishable isomers of the same compound. However, insufficient evidence is available to determine unequivocal identities.

VOST Summary - Run 1 Train Totals
Method 0031 Volatile Organic Compounds Analytical Results Summary
Table A-7. HLLWE Run ID: 0031-STRT-1

Field Sample Name: Volatile Organic Sampling Train (VOST) Totals
Sample Description: Tenax® and Anasorb 747® Tube Sets (Sets #1, #2, #3, and #4) and the VOST Condensate for Volatile Organic Compounds (VOC) Analysis

Analyte	CAS Registry Number	VOST Tube Set #1 (Total µg/Set)		VOST Tube Set #2 (Total µg/Set)		VOST Tube Set #3 (Total µg/Set)		VOST Tube Set #4 (Total µg/Set)		VOST Condensate (Total µg)		VOST Total[1] (Total µg)		*Project Specific Flag*[6]
		Risk Result[2]	Flag[3]	Risk Result[2]	Flag[3]	Risk Result[2]	Flag[3]	Risk Result[2]	Flag[3]	Risk Result[4]	Flag[5]	Total	Flag	
Target Compound List														
Acetone	67-64-1	2.4	B	1.1	B	1.0	B	1.3	B	1.4	B	7.2	B	A
Acrylonitrile	107-13-1	< 0.58		< 0.58		< 0.58		< 0.58		< 0.51		< 2.8		N
Benzene	71-43-2	< 0.17		< 0.11		< 0.046		< 0.043		< 0.027		< 0.40		P
Bromobenzene	108-86-1	< 0.020		< 0.020		< 0.020		< 0.020		< 0.036		< 0.12		N
Bromochloromethane	74-97-5	< 0.030		< 0.030		< 0.030		< 0.030		< 0.028		< 0.15		N
Bromodichloromethane	75-27-4	< 0.022		< 0.022		< 0.022		< 0.022		< 0.033		< 0.12		N
Bromoform	75-25-2	< 0.038		< 0.038		< 0.038		< 0.038		< 0.025		< 0.18		N
Bromomethane	74-83-9	< 0.030	J	< 0.038	J	< 0.030	J	< 0.054	J	< 0.020		< 0.17	J	P
2-Butanone	78-93-3	< 0.20	J	< 0.20		< 0.20		< 0.20		< 0.093		< 0.89	J	P
n-Butylbenzene	104-51-8	< 0.032		< 0.032		< 0.032		< 0.032		< 0.025		< 0.15		N
sec-Butylbenzene	135-98-8	< 0.017		< 0.017		< 0.017		< 0.017		< 0.017		< 0.085		N
tert-Butylbenzene	98-06-6	< 0.032		< 0.032		< 0.032		< 0.032		< 0.014		< 0.14		N
Carbon disulfide	75-15-0	< 0.37		< 0.24		< 0.16		< 0.19		< 0.011		< 0.97		P
Carbon tetrachloride	56-23-5	< 0.036		< 0.036		< 0.036		< 0.036		< 0.020		< 0.16		N
Chlorobenzene	108-90-7	< 0.017		< 0.017		< 0.017		< 0.017		< 0.027		< 0.095		N
Chlorodibromomethane	124-48-1	< 0.030		< 0.030		< 0.030		< 0.030		< 0.029		< 0.15		N
Chloroethane	75-00-3	< 0.036		< 0.036	J	< 0.036	J	< 0.043	J	< 0.014		< 0.16	J	P
Chloroform	67-66-3	< 0.036		< 0.036		< 0.036	J	< 0.10		< 0.031		< 0.24	J	P
Chloromethane	74-87-3	0.15	J	0.28	J	0.14	J	0.61		< 0.011		1.2	J	P
2-Chlorotoluene	95-49-8	< 0.0094		< 0.0094		< 0.0094		< 0.0094		< 0.021		< 0.059		N
4-Chlorotoluene	106-43-4	< 0.0094		< 0.0094		< 0.0094		< 0.0094		< 0.021		< 0.059		N
1,2-Dibromo-3-chloropropane	96-12-8	< 0.058		< 0.058		< 0.058		< 0.058		< 0.042		< 0.27		N
1,2-Dibromoethane	106-93-4	< 0.040		< 0.040		< 0.040		< 0.040		< 0.042		< 0.20		N
Dibromomethane	74-95-3	< 0.034		< 0.034		< 0.034		< 0.034		< 0.030		< 0.17		N
1,2-Dichlorobenzene	95-50-1	< 0.040		< 0.040		< 0.040		< 0.040		< 0.019		< 0.18		N
1,3-Dichlorobenzene	541-73-1	< 0.020		< 0.020		< 0.020		< 0.020		< 0.022		< 0.10		N
1,4-Dichlorobenzene	106-46-7	< 0.028		< 0.028		< 0.028		< 0.028		< 0.023		< 0.14		N

VOST Summary - Run 1 Train Totals (Continued)
Method 0031 Volatile Organic Compounds Analytical Results Summary
Table A-7. HLLWE Run ID: 0031-STRT-1

Analyte	CAS Registry Number	VOST Tube Set #1 (Total µg/Set)		VOST Tube Set #2 (Total µg/Set)		VOST Tube Set #3 (Total µg/Set)		VOST Tube Set #4 (Total µg/Set)		VOST Condensate (Total µg)		VOST Total[1] (Total µg)		*Project Specific Flag[6]*
		Risk Result[2]	Flag[3]	Risk Result[2]	Flag[3]	Risk Result[2]	Flag[3]	Risk Result[2]	Flag[3]	Risk Result[4]	Flag[5]	Total	Flag	
Dichlorodifluoromethane	75-71-8	< 0.064		< 0.061		< 0.057		< 0.062		< 0.011		< 0.26		P
1,1-Dichloroethane	75-34-3	< 0.034		< 0.034		< 0.034		< 0.034		< 0.017		< 0.15		N
1,2-Dichloroethane	107-06-2	< 0.034	J	< 0.034		< 0.034		< 0.034		< 0.020		< 0.16	J	P
1,1-Dichloroethene	75-35-4	< 0.036		< 0.036	J	< 0.036	J	< 0.036	J	< 0.016		< 0.16	J	P
cis-1,2-Dichloroethene	156-59-2	< 0.032		< 0.032		< 0.032		< 0.032		< 0.021		< 0.15		N
trans-1,2-Dichloroethene	156-60-5	< 0.038		< 0.038		< 0.038		< 0.038		< 0.014		< 0.17		N
1,2-Dichloropropane	78-87-5	< 0.026		< 0.026		< 0.026		< 0.026		< 0.023		< 0.13		N
1,3-Dichloropropane	142-28-9	< 0.038		< 0.038		< 0.038		< 0.038		< 0.022		< 0.17		N
2,2-Dichloropropane	594-20-7	< 0.036		< 0.036		< 0.036		< 0.036		< 0.011		< 0.16		N
1,1-Dichloropropene	563-58-6	< 0.040		< 0.040		< 0.040		< 0.040		< 0.016		< 0.18		N
cis-1,3-Dichloropropene	10061-01-5	< 0.024		< 0.024		< 0.024		< 0.024		< 0.030		< 0.13		N
trans-1,3-Dichloropropene	10061-02-6	< 0.030		< 0.030		< 0.030		< 0.030		< 0.028		< 0.15		N
Ethylbenzene	100-41-4	< 0.018		< 0.018		< 0.018		< 0.018		< 0.021		< 0.093		N
Hexachlorobutadiene	87-68-3	< 0.050		< 0.050		< 0.050		< 0.050		< 0.025		< 0.22		N
2-Hexanone	591-78-6	< 0.13		< 0.13		< 0.13		< 0.13		< 0.036		< 0.56		N
Isopropylbenzene	98-82-8	< 0.013		< 0.013		< 0.013		< 0.013		< 0.018		< 0.070		N
p-Isopropyltoluene	99-87-6	< 0.024		< 0.024		< 0.024		< 0.024		< 0.018		< 0.11		N
Methylene chloride	75-09-2	13	E	3.0	E,B	1.1	B	0.96	B	0.12	B	18	E,B	A
4-Methyl-2-pentanone	108-10-1	< 0.14		< 0.14		< 0.14		< 0.14		< 0.030		< 0.59		N
Naphthalene	91-20-3	< 0.050		< 0.050		< 0.050		< 0.050		< 0.011		< 0.21		N
n-Propylbenzene	103-65-1	< 0.011		< 0.011		< 0.011		< 0.012		< 0.022		< 0.067		N
Styrene	100-42-5	< 0.014		< 0.014		< 0.014		< 0.014		< 0.022		< 0.078		N
1,1,1,2-Tetrachloroethane	630-20-6	< 0.019		< 0.019		< 0.019		< 0.019		< 0.023		< 0.099		N
1,1,2,2-Tetrachloroethane	79-34-5	< 0.050		< 0.050		< 0.050		< 0.050		< 0.025		< 0.22		N
Tetrachloroethene	127-18-4	< 0.032		< 0.032		< 0.032		< 0.032		< 0.021		< 0.15		N
Toluene	108-88-3	< 0.032	J	0.041	J	< 0.023	J	0.064	J	< 0.028		< 0.19	J	P
1,2,3-Trichlorobenzene	87-61-6	< 0.050		< 0.050		< 0.050		< 0.050		< 0.011		< 0.21		N
1,2,4-Trichlorobenzene	120-82-1	< 0.050		< 0.050		< 0.050		< 0.050		< 0.025		< 0.22		N
1,1,1-Trichloroethane	71-55-6	< 0.044		< 0.044		< 0.044		< 0.044		< 0.018		< 0.19		N
1,1,2-Trichloroethane	79-00-5	< 0.036		< 0.036		< 0.036		< 0.036		< 0.022		< 0.17		N

VOST Summary - Run 1 Train Totals (Continued)
Method 0031 Volatile Organic Compounds Analytical Results Summary
Table A-7. HLLWE Run ID: 0031-STRT-1

Analyte	CAS Registry Number	VOST Tube Set #1 (Total µg/Set)		VOST Tube Set #2 (Total µg/Set)		VOST Tube Set #3 (Total µg/Set)		VOST Tube Set #4 (Total µg/Set)		VOST Condensate (Total µg)		VOST Total[1] (Total µg)		*Project Specific Flag[6]*
		Risk Result[2]	Flag[3]	Risk Result[2]	Flag[3]	Risk Result[2]	Flag[3]	Risk Result[2]	Flag[3]	Risk Result[4]	Flag[5]	Total	Flag	
Trichloroethene	79-01-6	< 0.034		< 0.034		< 0.034		< 0.034		< 0.020		< 0.16		N
Trichlorofluoromethane	75-69-4	< 0.036	J	< 0.036	J	< 0.036	J	< 0.036	J	< 0.011		< 0.16	J	P
1,2,3-Trichloropropane	96-18-4	< 0.050		< 0.050		< 0.050		< 0.050		< 0.036		< 0.24		N
1,2,4-Trimethylbenzene	95-63-6	< 0.015		< 0.015		< 0.015		< 0.015		< 0.042		< 0.10		N
1,3,5-Trimethylbenzene	108-67-8	< 0.010		< 0.010		< 0.010		< 0.010		< 0.019		< 0.059		N
Vinyl chloride	75-01-4	< 0.013		< 0.016	J	< 0.013	J	< 0.022	J	< 0.068		< 0.13	J	P
m-Xylene & p-Xylene	136777-61-2	< 0.10		< 0.10		< 0.10		< 0.10		< 0.042		< 0.44		N
o-Xylene	95-47-6	< 0.013		< 0.013		< 0.013		< 0.013		< 0.025		< 0.077		N
TICs[7]														
Hexane, 2-methyl-	591-76-4	---		---		---		0.17		---		0.17	N,J,M	P
Pentane, 2,3-dimethyl-	565-59-3	---		---		---		0.18		---		0.18	N,J,M	P
Butane, 1-chloro-	109-69-3	---		---		---		0.057		---		0.057	N,J,M	P
Hexane, 3-methyl-	589-34-4	---		---		---		0.38		---		0.38	N,J,M	P
Cyclohexene	110-83-8	---		0.044		0.027		0.033		---		0.10	N,J,M	P
1-Heptene	592-76-7	---		---		---		0.054		---		0.054	N,J,M	P
Cyclohexane, methyl-	108-87-2	---		---		---		0.11		---		0.11	N,J,M	P
Hexane, 2,4-dimethyl-	589-43-5	---		---		---		0.11		---		0.11	N,J,M	P
Cyclopentane, ethyl-	1640-89-7	---		---		---		0.028		---		0.028	N,J,M	P
Octane	111-65-9	0.027		---		---		---		---		0.027	N,J,M	P
Decane	124-18-5	---		0.055		0.060		---		---		0.12	N,J,M	P
Undecane	1120-21-4	0.44		0.23		---		0.37		---		1.0	N,J,M	P
Undecane, 5-methyl-	1632-70-8	0.13		0.091		0.14		0.28		---		0.64	N,J,M	P
Decane, 2,9-dimethyl-	1002-17-1	0.064		---		---		---		---		0.064	N,J,M	P
Dodecane	112-40-3	5.3		4.6		7.2		14		---		31	N,J,M	P
Undecane, 2,6-dimethyl-	17301-23-4	---		---		---		0.11		---		0.11	N,J,M	P
Cyclohexane, hexyl-	4292-75-5	---		---		0.059		---		---		0.059	N,J,M	P
Tridecane	629-50-5	0.39		0.32		0.51		1.6		---		2.8	N,J,M	P
Tetradecane	629-59-4	0.15		0.19		0.22		0.36		---		0.92	N,J,M	P

Footnotes:

[1] The Method 0031 VOST Run Total (in Total µg) is the sum of results for the four (4) VOST tube sets and the condensate sample collected during the same sampling run using the following guidelines:

- When the train component analytical result is greater than the laboratory reporting limit (RL), the result included in the train total is the actual analytical result or "hit" determined by the laboratory.
- When the train component analytical result is greater than the reliable detection level (RDL), but less than the laboratory reporting limit (RL), the result included in the train total is the actual analytical result or "hit" determined by the laboratory and the corresponding "J" flag is carried through the calculation to the train total.
- When the train analytical component result is less than the RDL, but greater than the method detection limit (MDL), the result included in the train total is the RDL and the corresponding "J" flag is carried through the calculation to the train total.
- When the train component analytical result is not detected down to the MDL, the result included in the train total is the RDL and the corresponding "U" flag is carried through the calculation to the train total.
- It should be noted that when the RDL is selected as the default value using the guidelines above, but the RDL is greater than the RL, the RL is included in the train total.

The data flags attached to the VOST Total are the cumulative set of flags contributed by each train tube set included as part of the VOST total. A flag attached to a VOST component is carried through to the "VOST Total" column when the associated component analytical result is a significant number in comparison to the VOST Total. That is, if the VOST Total is affected by a VOST component analytical result, the associated flag is carried through to the VOST Total, but if the VOST Total is not affected by a VOST component, the associated flag is not carried through to the VOST Total. The combinations of train fractions are conducted following the standard practice of using significant figures found in ASTM E29-93a(1999), "Standard Practice for Using Significant Digits in Test Data to Determine Conformance with Specifications" and Severn Trent Laboratories standard operating procedure number QA-004, "Rounding and Significant Figures".

[2] The Method 0031 VOST Tube Set (Total µg/Set) result consists of the sum of the analytical results for the two (2) Tenax® resin tube contents (analyzed together) and the analytical result for the Anasorb 747® Tube contents. The calculation is as follows:

(Total µg on the Tenax® Tubes #1 and #2) + (Total µg on the Anasorb 747® Tube) = Total µg on the Method 0031 VOST tube set.
Therefore: (µg) + (µg) = Total µg/set

When listed, the less than (<) sign indicates that at least one sample fraction result is either a "non-detect" value down to the MDL of the measurement that carries, or an estimated "hit" value that is below the RDL. In either case, the final value included in the tube set total is the default RDL value and the actual value is known to be less than (<) the displayed result.

[3] The data flags in this column for the VOST Tube Set are the cumulative set of flags contributed by each individual train component included as part of the VOST total. A flag attached to a VOST component is carried through to the "VOST Tube Set" column when the associated component analytical result is a significant number in comparison to the VOST tube set total. That is, if the VOST Tube Set Total is affected by a VOST component analytical result, the associated flag is carried through to the VOST Tube Set Total, but if the VOST Tube Set Total is not affected by a VOST component analytical result, the associated flag is not carried through to the VOST Tube Set Total.

[4] The VOST Condensate result was obtained by multiplying the sample's corresponding RDL or "hit" by the VOST condensate volume.

[5] This flag is the laboratory data flag that corresponds to EPA guidelines. The data flags for these samples are as follows:

- A "U" qualifier indicates that this analyte was analyzed for, but was not detected down to the MDL.
- An "E" flag indicates that the result exceeded the upper calibration range. The analytical result is therefore an estimated value.

- A "J" flag indicates that this compound was detected, but at a concentration below the laboratory RL. The analytical result is therefore an estimated value.
- A "B" flag indicates that this compound was found in the associated laboratory method blank. Under these conditions this value is regarded as an estimated value.
- A "Y" flag indicates that this compound is an indistinguishable isomer as a tentatively identified compound (TIC).
- An "N" flag indicates that there is presumptive evidence that this compound is present in the sample based on spectral evidence.
- An "M" flag indicates that this result was measured against the nearest internal standard and assumed a response factor of one (1).
- A "D" flag indicates that this result was obtained by a dilution of the sample. The original analysis yielded an analytical result that exceeded the calibration range.

6. Entries in this column are project-specific train total flags that are applied to the run total values and are not standard EPA data flags. These project-specific flags are utilized for the INEEL NWCF HLLWE Effluent Gas Emissions Inventory project and are defined as follows:

- An "N" flag in this column indicates that the compound was not measured (detected) in any of the sampling train components, or fractions.
- A "P" flag in this column indicates that the compound was measured (detected) in one or more of the train components, or fractions, but not in all of the sampling train fractions.
- An "A" flag in this column indicates that the compound was measured (detected) in all of the sampling train components, or fractions.

7. The tentatively identified compounds (TICs) were identified by conducting a mass spectral library search using the NBS library of data.

VOST Summary - Run 3 Train Totals
Method 0031 Volatile Organic Compounds Analytical Results Summary
Table A-8. HLLWE Run ID: 0031-END-1

Field Sample Name: Volatile Organic Sampling Train (VOST) Totals
Sample Description: Tenax® and Anasorb 747® Tube Sets (Sets #1, #2, #3, and #4) and the VOST Condensate for Volatile Organic Compounds (VOC) Analysis

Analyte	CAS Registry Number	VOST Tube Set #1 (Total µg/Set)		VOST Tube Set #2 (Total µg/Set)		VOST Tube Set #3 (Total µg/Set)		VOST Tube Set #4 (Total µg/Set)		VOST Condensate (Total µg)		VOST Total[1] (Total µg)		*Project Specific Flag*[6]
		Risk Result[2]	Flag[3]	Risk Result[2]	Flag[3]	Risk Result[2]	Flag[3]	Risk Result[2]	Flag[3]	Risk Result[4]	Flag[5]	Total	Flag	
Target Compound List														
Acetone	67-64-1	0.70	B	2.6	B	1.4	B	1.1	B	1.4	B	7.2	B	A
Acrylonitrile	107-13-1	< 0.58		< 0.58		< 0.58		< 0.58		< 0.51		< 2.8		N
Benzene	71-43-2	< 0.053		< 0.047		< 0.058		< 0.058		< 0.027		< 0.24		P
Bromobenzene	108-86-1	< 0.020		< 0.020		< 0.020		< 0.020		< 0.036		< 0.12		N
Bromochloromethane	74-97-5	< 0.030		< 0.030		< 0.030		< 0.030		< 0.028		< 0.15		N
Bromodichloromethane	75-27-4	< 0.022		< 0.022		< 0.022		< 0.022		< 0.034		< 0.12		N
Bromoform	75-25-2	< 0.038		< 0.038		< 0.038		< 0.038		< 0.026		< 0.18		N
Bromomethane	74-83-9	0.035	J	0.045	J	0.054	J	0.075	J	< 0.020		< 0.23	J	P
2-Butanone	78-93-3	< 0.20		< 0.20	J	< 0.20	J	< 0.20	J	< 0.094		< 0.89	J	P
n-Butylbenzene	104-51-8	< 0.032		< 0.032		< 0.032		< 0.032		< 0.026		< 0.15		N
sec-Butylbenzene	135-98-8	< 0.017		< 0.017		< 0.017		< 0.017		< 0.017		< 0.085		N
tert-Butylbenzene	98-06-6	< 0.032		< 0.032		< 0.032		< 0.032		< 0.015		< 0.14		N
Carbon disulfide	75-15-0	< 0.35		< 0.17		< 0.39		< 0.27		< 0.011		< 1.2		P
Carbon tetrachloride	56-23-5	< 0.036		< 0.036		< 0.036		< 0.036		< 0.020		< 0.16		N
Chlorobenzene	108-90-7	< 0.017		< 0.017		< 0.017	J	< 0.017	J	< 0.027		< 0.095	J	P
Chlorodibromomethane	124-48-1	< 0.030		< 0.030		< 0.030		< 0.030		< 0.029		< 0.15		N
Chloroethane	75-00-3	< 0.041	J	< 0.043	J	< 0.047	J	0.049	J	< 0.015		< 0.20	J	P
Chloroform	67-66-3	< 0.096		< 0.090		< 0.090		< 0.090		< 0.031		< 0.40		P
Chloromethane	74-87-3	0.52		0.64		0.69		1.0		< 0.011		< 2.9		P
2-Chlorotoluene	95-49-8	< 0.0094		< 0.0094		< 0.0094		< 0.0094		< 0.021		< 0.059		N
4-Chlorotoluene	106-43-4	< 0.0094		< 0.0094		< 0.0094		< 0.0094		< 0.021		< 0.059		N
1,2-Dibromo-3-chloropropane	96-12-8	< 0.058		< 0.058		< 0.058		< 0.058		< 0.043		< 0.28		N
1,2-Dibromoethane	106-93-4	< 0.040		< 0.040		< 0.040		< 0.040		< 0.043		< 0.20		N
Dibromomethane	74-95-3	< 0.034		< 0.034		< 0.034		< 0.034		< 0.030		< 0.17		N
1,2-Dichlorobenzene	95-50-1	< 0.040		< 0.040		< 0.040		< 0.040		< 0.019		< 0.18		N
1,3-Dichlorobenzene	541-73-1	< 0.020		< 0.020		< 0.020		< 0.020		< 0.022		< 0.10		N
1,4-Dichlorobenzene	106-46-7	< 0.028		< 0.028		< 0.028		< 0.028		< 0.024		< 0.14		N

Last saved by Patti Carswell on 02/05/02 at 7:36 AM
E:\My Documents\HLLWE Sampling\Final Report\Appendix A\Table A-8. 0031-END-1.doc
Created on 2/5/2002 7:28 AM

VOST Summary - Run 3 Train Totals (Continued)
Method 0031 Volatile Organic Compounds Analytical Results Summary
Table A-8. HLLWE Run ID: 0031-END-1

Analyte	CAS Registry Number	VOST Tube Set #1 (Total µg/Set)		VOST Tube Set #2 (Total µg/Set)		VOST Tube Set #3 (Total µg/Set)		VOST Tube Set #4 (Total µg/Set)		VOST Condensate (Total µg)		VOST Total[1] (Total µg)		*Project Specific Flag[6]*
		Risk Result[2]	Flag[3]	Risk Result[2]	Flag[3]	Risk Result[2]	Flag[3]	Risk Result[2]	Flag[3]	Risk Result[4]	Flag[5]	Total	Flag	
Dichlorodifluoromethane	75-71-8	< 0.035	J	< 0.037	J	< 0.034	J	< 0.046		< 0.011		< 0.16	J	P
1,1-Dichloroethane	75-34-3	< 0.034		< 0.034		< 0.034		< 0.034		< 0.017		< 0.15		N
1,2-Dichloroethane	107-06-2	< 0.034	J	< 0.034	J	< 0.034	J	< 0.034	J	< 0.020		< 0.16	J	P
1,1-Dichloroethene	75-35-4	< 0.036	J	< 0.041	J	< 0.039	J	< 0.044		< 0.016		< 0.18	J	P
cis-1,2-Dichloroethene	156-59-2	< 0.032		< 0.032		< 0.032		< 0.032		< 0.021		< 0.15		N
trans-1,2-Dichloroethene	156-60-5	< 0.038		< 0.038		< 0.038		< 0.038		< 0.013		< 0.16		N
1,2-Dichloropropane	78-87-5	< 0.026		< 0.026		< 0.026		< 0.026	J	< 0.024		< 0.13	J	P
1,3-Dichloropropane	142-28-9	< 0.038		< 0.038		< 0.038		< 0.038		< 0.022		< 0.17		N
2,2-Dichloropropane	594-20-7	< 0.036		< 0.036		< 0.036		< 0.036		< 0.011		< 0.16		N
1,1-Dichloropropene	563-58-6	< 0.040		< 0.040		< 0.040		< 0.040		< 0.016		< 0.18		N
cis-1,3-Dichloropropene	10061-01-5	< 0.024		< 0.024		< 0.024		< 0.024		< 0.030		< 0.13		N
trans-1,3-Dichloropropene	10061-02-6	< 0.030		< 0.030		< 0.030		< 0.030		< 0.028		< 0.15		N
Ethylbenzene	100-41-4	< 0.018		< 0.018		< 0.018		< 0.018		< 0.021		< 0.093		N
Hexachlorobutadiene	87-68-3	< 0.050		< 0.050		< 0.050		< 0.050		< 0.025		< 0.22		N
2-Hexanone	591-78-6	< 0.13		< 0.13		< 0.13		< 0.13		< 0.036		< 0.56		N
Isopropylbenzene	98-82-8	< 0.013		< 0.013		< 0.013		< 0.013		< 0.018		< 0.070		N
p-Isopropyltoluene	99-87-6	< 0.024		< 0.024		< 0.024		< 0.024		< 0.018		< 0.11		N
Methylene chloride	75-09-2	0.59		0.26		0.42		0.28		0.13	B	1.7	B	A
4-Methyl-2-pentanone	108-10-1	< 0.14		< 0.14		< 0.14		< 0.14		< 0.030		< 0.59		N
Naphthalene	91-20-3	< 0.050		< 0.050		< 0.050		< 0.050		< 0.011		< 0.21		N
n-Propylbenzene	103-65-1	< 0.011		< 0.011		< 0.011		< 0.011		< 0.022		< 0.066		N
Styrene	100-42-5	< 0.014		< 0.014		< 0.014		< 0.014		< 0.022		< 0.078		N
1,1,1,2-Tetrachloroethane	630-20-6	< 0.019		< 0.019		< 0.019		< 0.019		< 0.024		< 0.10		N
1,1,2,2-Tetrachloroethane	79-34-5	< 0.050		< 0.050		< 0.050		< 0.050		< 0.025		< 0.22		N
Tetrachloroethene	127-18-4	< 0.032		< 0.032		< 0.032		< 0.032		< 0.021		< 0.15		N
Toluene	108-88-3	0.14		0.051	J	< 0.032	J	< 0.031	J	< 0.028		< 0.28	J	P
1,2,3-Trichlorobenzene	87-61-6	< 0.050		< 0.050		< 0.050		< 0.050		< 0.011		< 0.21		N
1,2,4-Trichlorobenzene	120-82-1	< 0.050		< 0.050		< 0.050		< 0.050		< 0.025		< 0.22		N
1,1,1-Trichloroethane	71-55-6	< 0.044		< 0.044		< 0.044		< 0.044		< 0.018		< 0.19		N

VOST Summary - Run 3 Train Totals (Continued)
Method 0031 Volatile Organic Compounds Analytical Results Summary
Table A-8. HLLWE Run ID: 0031-END-1

Analyte	CAS Registry Number	VOST Tube Set #1 (Total µg/Set)		VOST Tube Set #2 (Total µg/Set)		VOST Tube Set #3 (Total µg/Set)		VOST Tube Set #4 (Total µg/Set)		VOST Condensate (Total µg)		VOST Total[1] (Total µg)		*Project Specific Flag[6]*
		Risk Result[2]	Flag[3]	Risk Result[2]	Flag[3]	Risk Result[2]	Flag[3]	Risk Result[2]	Flag[3]	Risk Result[4]	Flag[5]	Total	Flag	
1,1,2-Trichloroethane	79-00-5	< 0.036		< 0.036		< 0.036		< 0.036		< 0.022		< 0.17		N
Trichloroethene	79-01-6	< 0.034		< 0.034		< 0.034		< 0.034		< 0.020		< 0.16		N
Trichlorofluoromethane	75-69-4	< 0.036		< 0.036		< 0.036	J	< 0.036		< 0.011		< 0.16	J	P
1,2,3-Trichloropropane	96-18-4	< 0.050		< 0.050		< 0.050		< 0.050		< 0.036		< 0.24		N
1,2,4-Trimethylbenzene	95-63-6	< 0.015		< 0.015		< 0.015		< 0.015		< 0.043		< 0.10		N
1,3,5-Trimethylbenzene	108-67-8	< 0.010		< 0.010		< 0.010		< 0.010		< 0.019		< 0.059		N
Vinyl chloride	75-01-4	< 0.020	J	< 0.025	J	0.023	J	0.039	J	< 0.068		< 0.18	J	P
m-Xylene & p-Xylene	136777-61-2	< 0.10		< 0.10		< 0.10		< 0.10		< 0.043		< 0.44		N
o-Xylene	95-47-6	< 0.013	J	< 0.013		< 0.013		< 0.013		< 0.026		< 0.078	J	P
TIC[7]														
Pentane, 3,3-dimethyl-	562-49-2	0.059		---		---		---		---		0.059	N,J,M	P
Hexane, 2-methyl-	591-76-4	0.27		0.037		---		---		---		0.31	N,J,M	P
Pentane, 2,3-dimethyl-	565-59-3	---		0.031		---		---		---		0.031	N,J,M	P
Hexane, 3-methyl-	589-34-4	0.65		0.076		0.031		---		---		0.76	N,J,M	P
Cyclohexene	110-83-8	0.036		---		---		---		---		0.036	N,J,M	P
Cyclobutane, ethenyl-	2597-49-1	---		0.029		0.044		0.047		---		0.12	N,J,M	P
Cyclopentane, 1,2-dimethyl-, t	822-50-4	0.079		---		---		---		---		0.079	N,J,M	P
Cyclohexane, methyl-	108-87-2	0.20		---		---		---		---		0.20	N,J,M	P
Hexane, 2,4-dimethyl-	589-43-5	0.16		0.025		---		---		---		0.18	N,J,M	P
Cyclopentane, ethyl-	1640-89-7	0.041		---		---		---		---		0.041	N,J,M	P
Methane, trichloronitro-	76-06-2	---		---		---		0.36		---		0.36	N,J,M	P
Benzonitrile	100-47-0	---		0.074		0.058		0.059		---		0.19	N,J,M	P
Undecane	1120-21-4	0.21		---		0.14		0.15		---		0.50	N,J,M	P
Undecane, 5-methyl-	1632-70-8	---		---		0.076		0.10		---		0.18	N,J,M	P
Dodecane	112-40-3	8.4		5.7		5.2		6.8		---		26	N,J,M	P
Tridecane	629-50-5	0.98		0.64		0.58		0.89		---		3.1	N,J,M	P
Tetradecane	629-59-4	0.40		0.24		---		0.37		---		1.0	N,J,M	P
Hexadecane	544-76-3	---		---		0.21		---		---		0.21	N,J,M	P

Footnotes:

[1] The Method 0031 VOST Run Total (in Total µg) is the sum of results for the four (4) VOST tube sets and the condensate sample collected during the same sampling run using the following guidelines:

- When the train component analytical result is greater than the laboratory reporting limit (RL), the result included in the train total is the actual analytical result or "hit" determined by the laboratory.
- When the train component analytical result is greater than the reliable detection level (RDL), but less than the laboratory reporting limit (RL), the result included in the train total is the actual analytical result or "hit" determined by the laboratory and the corresponding "J" flag is carried through the calculation to the train total.
- When the train analytical component result is less than the RDL, but greater than the method detection limit (MDL), the result included in the train total is the RDL and the corresponding "J" flag is carried through the calculation to the train total.
- When the train component analytical result is not detected down to the MDL, the result included in the train total is the RDL and the corresponding "U" flag is carried through the calculation to the train total.
- It should be noted that when the RDL is selected as the default value using the guidelines above, but the RDL is greater than the RL, the RL is included in the train total.

The data flags attached to the VOST Total are the cumulative set of flags contributed by each train tube set included as part of the VOST total. A flag attached to a VOST component is carried through to the "VOST Total" column when the associated component analytical result is a significant number in comparison to the VOST Total. That is, if the VOST Total is affected by a VOST component analytical result, the associated flag is carried through to the VOST Total, but if the VOST Total is not affected by a VOST component, the associated flag is not carried through to the VOST Total. The combinations of train fractions are conducted following the standard practice of using significant figures found in ASTM E29-93a(1999), "Standard Practice for Using Significant Digits in Test Data to Determine Conformance with Specifications" and Severn Trent Laboratories standard operating procedure number QA-004, "Rounding and Significant Figures".

[2] The Method 0031 VOST Tube Set (Total µg/Set) result consists of the sum of the analytical results for the two (2) Tenax® resin tube contents (analyzed together) and the analytical result for the Anasorb 747® Tube contents. The calculation is as follows:

(Total µg on the Tenax® Tubes #1 and #2) + (Total µg on the Anasorb 747® Tube) = Total µg on the Method 0031 VOST tube set.
Therefore: (µg) + (µg) = Total µg/set

When listed, the less than (<) sign indicates that at least one sample fraction result is either a "non-detect" value down to the MDL of the measurement that carries, or an estimated "hit" value that is below the RDL. In either case, the final value included in the tube set total is the default RDL value and the actual value is known to be less than (<) the displayed result.

[3] The data flags in this column for the VOST Tube Set are the cumulative set of flags contributed by each individual train component included as part of the VOST total. A flag attached to a VOST component is carried through to the "VOST Tube Set" column when the associated component analytical result is a significant number in comparison to the VOST tube set total. That is, if the VOST Tube Set Total is affected by a VOST component analytical result, the associated flag is carried through to the VOST Tube Set Total, but if the VOST Tube Set Total is not affected by a VOST component analytical result, the associated flag is not carried through to the VOST Tube Set Total.

[4] The VOST Condensate result was obtained by multiplying the sample's corresponding RDL or "hit" by the VOST condensate volume.

[5] This flag is the laboratory data flag that corresponds to EPA guidelines. The data flags for these samples are as follows:

- A "U" qualifier indicates that this analyte was analyzed for, but was not detected down to the MDL.
- An "E" flag indicates that the result exceeded the upper calibration range. The analytical result is therefore an estimated value.

- A "J" flag indicates that this compound was detected, but at a concentration below the laboratory RL. The analytical result is therefore an estimated value.
- A "B" flag indicates that this compound was found in the associated laboratory method blank. Under these conditions this value is regarded as an estimated value.
- A "Y" flag indicates that this compound is an indistinguishable isomer as a tentatively identified compound (TIC).
- An "N" flag indicates that there is presumptive evidence that this compound is present in the sample based on spectral evidence.
- An "M" flag indicates that this result was measured against the nearest internal standard and assumed a response factor of one (1).
- A "D" flag indicates that this result was obtained by a dilution of the sample. The original analysis yielded an analytical result that exceeded the calibration range.

[6] Entries in this column are project-specific train total flags that are applied to the run total values and are not standard EPA data flags. These project-specific flags are utilized for the INEEL NWCF HLLWE Effluent Gas Emissions Inventory project and are defined as follows:

- An "N" flag in this column indicates that the compound was not measured (detected) in any of the sampling train components, or fractions.
- A "P" flag in this column indicates that the compound was measured (detected) in one or more of the train components, or fractions, but not in all of the sampling train fractions.
- An "A" flag in this column indicates that the compound was measured (detected) in all of the sampling train components, or fractions.

[7] The tentatively identified compounds (TICs) were identified by conducting a mass spectral library search using the NBS library of data.

VOST Summary - Run 2 Train Totals
Method 0031 Volatile Organic Compounds Analytical Results Summary
Table A-9. HLLWE Run ID: 0031-STRT-2

Field Sample Name: Volatile Organic Sampling Train (VOST) Totals
Sample Description: Tenax® and Anasorb 747® Tube Sets (Sets #1, #2, #3, and #4) and the VOST Condensate for Volatile Organic Compounds (VOC) Analysis

Analyte	CAS Registry Number	VOST Tube Set #1 (Total µg/Set)		VOST Tube Set #2 (Total µg/Set)		VOST Tube Set #3 (Total µg/Set)		VOST Tube Set #4 (Total µg/Set)		VOST Condensate (Total µg)		VOST Total[1] (Total µg)		*Project Specific Flag*[6]
		Risk Result[2]	Flag[3]	Risk Result[2]	Flag[3]	Risk Result[2]	Flag[3]	Risk Result[2]	Flag[3]	Risk Result[4]	Flag[5]	Total	Flag	
Target Compound List														
Acetone	67-64-1	1.2	B	0.81	J,B	1.2	B	< 0.26	J,B	1.5	B	5.0	J,B	A
Acrylonitrile	107-13-1	< 0.58		< 0.58		< 0.58		< 0.58		< 0.51		< 2.8		N
Benzene	71-43-2	< 0.063		< 0.053		< 0.040	J	< 0.038	J	< 0.027		< 0.22	J	P
Bromobenzene	108-86-1	< 0.020		< 0.020		< 0.020		< 0.020		< 0.036		< 0.12		N
Bromochloromethane	74-97-5	< 0.030		< 0.030		< 0.030		< 0.030		< 0.028		< 0.15		N
Bromodichloromethane	75-27-4	< 0.022		< 0.022		< 0.022		< 0.022		< 0.034		< 0.12		N
Bromoform	75-25-2	< 0.038		< 0.038		< 0.038		< 0.038		< 0.026		< 0.18		N
Bromomethane	74-83-9	< 0.030	J	< 0.030	J	< 0.033	J	< 0.039	J	< 0.020		< 0.15	J	P
2-Butanone	78-93-3	< 0.20		< 0.20		< 0.20	J	< 0.20		< 0.094		< 0.89	J	P
n-Butylbenzene	104-51-8	< 0.032		< 0.032		< 0.032		< 0.032		< 0.026		< 0.15		N
sec-Butylbenzene	135-98-8	< 0.017		< 0.017		< 0.017		< 0.017		< 0.017		< 0.085		N
tert-Butylbenzene	98-06-6	< 0.032		< 0.032		< 0.032		< 0.032		< 0.015		< 0.14		N
Carbon disulfide	75-15-0	< 0.46		< 0.31		< 0.29		< 0.26		< 0.011		< 1.3		P
Carbon tetrachloride	56-23-5	< 0.036		< 0.036		< 0.036		< 0.036		< 0.020		< 0.16		N
Chlorobenzene	108-90-7	< 0.017		< 0.017		< 0.017		< 0.017		< 0.027		< 0.095		N
Chlorodibromomethane	124-48-1	< 0.030		< 0.030		< 0.030		< 0.030		< 0.029		< 0.15		N
Chloroethane	75-00-3	< 0.036		< 0.036		< 0.042	J	< 0.038	J	< 0.015		< 0.17	J	P
Chloroform	67-66-3	< 0.036		< 0.036		< 0.094		< 0.13		< 0.031		< 0.33		P
Chloromethane	74-87-3	< 0.061	J	0.16	J	0.47		0.48		< 0.011		< 1.2	J	P
2-Chlorotoluene	95-49-8	< 0.0094		< 0.0094		< 0.0094		< 0.0094		< 0.021		< 0.059		N
4-Chlorotoluene	106-43-4	< 0.0094		< 0.0094		< 0.0094		< 0.0094		< 0.021		< 0.059		N
1,2-Dibromo-3-chloropropane	96-12-8	< 0.058		< 0.058		< 0.058		< 0.058		< 0.043		< 0.28		N
1,2-Dibromoethane	106-93-4	< 0.040		< 0.040		< 0.040		< 0.040		< 0.043		< 0.20		N
Dibromomethane	74-95-3	< 0.034		< 0.034		< 0.034		< 0.034		< 0.030		< 0.17		N
1,2-Dichlorobenzene	95-50-1	< 0.040		< 0.040		< 0.040		< 0.040		< 0.019		< 0.18		N
1,3-Dichlorobenzene	541-73-1	< 0.020		< 0.020		< 0.020		< 0.020		< 0.022		< 0.10		N

VOST Summary - Run 2 Train Totals (Continued)
Method 0031 Volatile Organic Compounds Analytical Results Summary
Table A-9. HLLWE Run ID: 0031-STRT-2

Analyte	CAS Registry Number	VOST Tube Set #1 (Total µg/Set)		VOST Tube Set #2 (Total µg/Set)		VOST Tube Set #3 (Total µg/Set)		VOST Tube Set #4 (Total µg/Set)		VOST Condensate (Total µg)		VOST Total[1] (Total µg)		*Project Specific Flag*[6]
		Risk Result[2]	Flag[3]	Risk Result[2]	Flag[3]	Risk Result[2]	Flag[3]	Risk Result[2]	Flag[3]	Risk Result[4]	Flag[5]	Total	Flag	
1,4-Dichlorobenzene	106-46-7	< 0.028		< 0.028		< 0.028		< 0.028		< 0.024		< 0.14		N
Dichlorodifluoromethane	75-71-8	< 0.047		< 0.054		< 0.048		< 0.039		< 0.011		< 0.20		P
1,1-Dichloroethane	75-34-3	< 0.034		< 0.034		< 0.034		< 0.034		< 0.017		< 0.15		N
1,2-Dichloroethane	107-06-2	< 0.034		< 0.034		< 0.034		< 0.034		< 0.020		< 0.16		N
1,1-Dichloroethene	75-35-4	< 0.036		< 0.036		< 0.036	J	< 0.036	J	< 0.016		< 0.16	J	P
cis-1,2-Dichloroethene	156-59-2	< 0.032		< 0.032		< 0.032		< 0.032		< 0.021		< 0.15		N
trans-1,2-Dichloroethene	156-60-5	< 0.038		< 0.038		< 0.038		< 0.038		< 0.013		< 0.16		N
1,2-Dichloropropane	78-87-5	< 0.026		< 0.026		< 0.026		< 0.026		< 0.024		< 0.13		N
1,3-Dichloropropane	142-28-9	< 0.038		< 0.038		< 0.038		< 0.038		< 0.022		< 0.17		N
2,2-Dichloropropane	594-20-7	< 0.036		< 0.036		< 0.036		< 0.036		< 0.011		< 0.16		N
1,1-Dichloropropene	563-58-6	< 0.040		< 0.040		< 0.040		< 0.040		< 0.016		< 0.18		N
cis-1,3-Dichloropropene	10061-01-5	< 0.024		< 0.024		< 0.024		< 0.024		< 0.030		< 0.13		N
trans-1,3-Dichloropropene	10061-02-6	< 0.030		< 0.030		< 0.030		< 0.030		< 0.028		< 0.15		N
Ethylbenzene	100-41-4	< 0.018		< 0.018		< 0.018		< 0.018		< 0.021		< 0.093		N
Hexachlorobutadiene	87-68-3	< 0.050		< 0.050		< 0.050		< 0.050		< 0.025		< 0.22		N
2-Hexanone	591-78-6	< 0.13		< 0.13		< 0.13		< 0.13		< 0.036		< 0.56		N
Isopropylbenzene	98-82-8	< 0.013		< 0.013		< 0.013		< 0.013		< 0.018		< 0.070		N
p-Isopropyltoluene	99-87-6	< 0.024		< 0.024		< 0.024		< 0.024		< 0.018		< 0.11		N
Methylene chloride	75-09-2	0.55	B	0.15	B	0.13	B	0.12	B	0.13	B	1.1	B	A
4-Methyl-2-pentanone	108-10-1	< 0.14		< 0.14		< 0.14		< 0.14		< 0.030		< 0.59		N
Naphthalene	91-20-3	< 0.050		< 0.050		< 0.050		< 0.050		< 0.011		< 0.21		N
n-Propylbenzene	103-65-1	< 0.011		< 0.011		< 0.011		< 0.011		< 0.022		< 0.066		N
Styrene	100-42-5	< 0.014		< 0.014		< 0.014		< 0.014		< 0.022		< 0.078		N
1,1,1,2-Tetrachloroethane	630-20-6	< 0.019		< 0.019		< 0.019		< 0.019		< 0.024		< 0.10		N
1,1,2,2-Tetrachloroethane	79-34-5	< 0.050		< 0.050		< 0.050		< 0.050		< 0.025		< 0.22		N
Tetrachloroethene	127-18-4	< 0.032		< 0.032		< 0.032		< 0.032		< 0.021		< 0.15		N
Toluene	108-88-3	< 0.027	J	0.17	J	0.031	J	0.045	J	< 0.028		< 0.30	J	P
1,2,3-Trichlorobenzene	87-61-6	< 0.050		< 0.050		< 0.050		< 0.050		< 0.011		< 0.21		N
1,2,4-Trichlorobenzene	120-82-1	< 0.050		< 0.050		< 0.050		< 0.050		< 0.025		< 0.22		N

VOST Summary - Run 2 Train Totals (Continued)
Method 0031 Volatile Organic Compounds Analytical Results Summary
Table A-9. HLLWE Run ID: 0031-STRT-2

Analyte	CAS Registry Number	VOST Tube Set #1 (Total µg/Set)		VOST Tube Set #2 (Total µg/Set)		VOST Tube Set #3 (Total µg/Set)		VOST Tube Set #4 (Total µg/Set)		VOST Condensate (Total µg)		VOST Total[1] (Total µg)		*Project Specific Flag*[6]
		Risk Result[2]	Flag[3]	Risk Result[2]	Flag[3]	Risk Result[2]	Flag[3]	Risk Result[2]	Flag[3]	Risk Result[4]	Flag[5]	Total	Flag	
1,1,1-Trichloroethane	71-55-6	< 0.044		< 0.044		< 0.044		< 0.044		< 0.018		< 0.19		N
1,1,2-Trichloroethane	79-00-5	< 0.036		< 0.036		< 0.036		< 0.036		< 0.022		< 0.17		N
Trichloroethene	79-01-6	< 0.034		< 0.034		< 0.034		< 0.034		< 0.020		< 0.16		N
Trichlorofluoromethane	75-69-4	< 0.036	J	< 0.036	J	< 0.036	J	< 0.036		< 0.011		< 0.16	J	P
1,2,3-Trichloropropane	96-18-4	< 0.050		< 0.050		< 0.050		< 0.050		< 0.036		< 0.24		N
1,2,4-Trimethylbenzene	95-63-6	< 0.015		< 0.015		< 0.015		< 0.015		< 0.043		< 0.10		N
1,3,5-Trimethylbenzene	108-67-8	< 0.010		< 0.010		< 0.010		< 0.010		< 0.019		< 0.059		N
Vinyl chloride	75-01-4	< 0.013		< 0.013		< 0.018	J	< 0.016	J	< 0.068		< 0.13	J	P
m-Xylene & p-Xylene	136777-61-2	< 0.10		< 0.10		< 0.10		< 0.10		< 0.043		< 0.44		N
o-Xylene	95-47-6	< 0.013		< 0.013		< 0.013		< 0.013		< 0.026		< 0.078		N

VOST Summary - Run 2 Train Totals (Continued)
Method 0031 Volatile Organic Compounds Analytical Results Summary
Table A-9. HLLWE Run ID: 0031-STRT-2

Analyte	CAS Registry Number	VOST Tube Set #1 (Total µg/Set)		VOST Tube Set #2 (Total µg/Set)		VOST Tube Set #3 (Total µg/Set)		VOST Tube Set #4 (Total µg/Set)		VOST Condensate (Total µg)		VOST Total[1] (Total µg)		*Project Specific Flag*[6]
		Risk Result[2]	Flag[3]	Risk Result[2]	Flag[3]	Risk Result[2]	Flag[3]	Risk Result[2]	Flag[3]	Risk Result[4]	Flag[5]	Total	Flag	
TICs[7]														
Hexane, 2-methyl-	591-76-4	---		0.17		0.059		0.072		---		0.30	N,J,M	P
Pentane, 2,3-dimethyl-	565-59-3	---		---		0.057		0.056		---		0.11	N,J,M	P
Hexane, 3-methyl-	589-34-4	---		---		0.12		0.15		---		0.27	N,J,M	P
Pentane, 3-ethyl-	617-78-7	---		---		0.034		---		---		0.034	N,J,M	P
Cyclohexene	110-83-8	0.030		0.042		0.036		0.073		---		0.18	N,J,M	P
Cyclopentane, 1,2-dimethyl-	2452-99-5	---		0.053		---		---		---		0.053	N,J,M	P
Cyclohexane, methyl-	108-87-2	---		0.13		0.032		0.037		---		0.20	N,J,M	P
Hexane, 2,4-dimethyl-	589-43-5	---		0.13		0.037		0.037		---		0.20	N,J,M	P
Cyclopentane, ethyl-	1640-89-7	---		0.036		---		---		---		0.036	N,J,M	P
Benzonitrile	100-47-0	0.038		0.034		---		---		---		0.072	N,J,M	P
Tridecane	629-50-5	0.082		---		---		---		---		0.082	N,J,M	P
Undecane	1120-21-4	---		0.065		0.10		0.080		---		0.24	N,J,M	P
Decane, 2,2,5-trimethyl-	62237-96-1	---		---		---		0.060		---		0.060	N,J,M	P
Undecane, 5-methyl-	1632-70-8	0.052		0.051		0.11		---		---		0.21	N,J,M	P
Dodecane	112-40-3	3.4		3.4		8.1		6.8		---		22	N,J,M	P
Dodecane, 6-methyl-	6044-71-9	---		---		0.052		---		---		0.052	N,J,M	P
Undecane, 2,6-dimethyl-	17301-23-4	---		---		---		0.046		---		0.046	N,J,M	P
Tridecane	629-50-5	0.34		0.29		0.84		0.93		---		2.4	N,J,M	P
Tetradecane	629-59-4	0.17		0.16		0.28		0.37		---		0.98	N,J,M	P

Footnotes:

[1] The Method 0031 VOST Run Total (in Total µg) is the sum of results for the four (4) VOST tube sets and the condensate sample collected during the same sampling run using the following guidelines:

- When the train component analytical result is greater than the laboratory reporting limit (RL), the result included in the train total is the actual analytical result or "hit" determined by the laboratory.
- When the train component analytical result is greater than the reliable detection level (RDL), but less than the laboratory reporting limit (RL), the result included in the train total is the actual analytical result or "hit" determined by the laboratory and the corresponding "J" flag is carried through the calculation to the train total.
- When the train analytical component result is less than the RDL, but greater than the method detection limit (MDL), the result included in the train total is the RDL and the corresponding "J" flag is carried through the calculation to the train total.
- When the train component analytical result is not detected down to the MDL, the result included in the train total is the RDL and the corresponding "U" flag is carried through the calculation to the train total.
- It should be noted that when the RDL is selected as the default value using the guidelines above, but the RDL is greater than the RL, the RL is included in the train total.

The data flags attached to the VOST Total are the cumulative set of flags contributed by each train tube set included as part of the VOST total. A flag attached to a VOST component is carried through to the "VOST Total" column when the associated component analytical result is a significant number in comparison to the VOST Total. That is, if the VOST Total is affected by a VOST component analytical result, the associated flag is carried through to the VOST Total, but if the VOST Total is not affected by a VOST component, the associated flag is not carried through to the VOST Total. The combinations of train fractions are conducted following the standard practice of using significant figures found in ASTM E29-93a(1999), "Standard Practice for Using Significant Digits in Test Data to Determine Conformance with Specifications" and Severn Trent Laboratories standard operating procedure number QA-004, "Rounding and Significant Figures".

[2] The Method 0031 VOST Tube Set (Total µg/Set) result consists of the sum of the analytical results for the two (2) Tenax® resin tube contents (analyzed together) and the analytical result for the Anasorb 747® Tube contents. The calculation is as follows:

(Total µg on the Tenax® Tubes #1 and #2) + (Total µg on the Anasorb 747® Tube) = Total µg on the Method 0031 VOST tube set.
Therefore: (µg) + (µg) = Total µg/set

When listed, the less than (<) sign indicates that at least one sample fraction result is either a "non-detect" value down to the MDL of the measurement that carries, or an estimated "hit" value that is below the RDL. In either case, the final value included in the tube set total is the default RDL value and the actual value is known to be less than (<) the displayed result.

[3] The data flags in this column for the VOST Tube Set are the cumulative set of flags contributed by each individual train component included as part of the VOST total. A flag attached to a VOST component is carried through to the "VOST Tube Set" column when the associated component analytical result is a significant number in comparison to the VOST tube set total. That is, if the VOST Tube Set Total is affected by a VOST component analytical result, the associated flag is carried through to the VOST Tube Set Total, but if the VOST Tube Set Total is not affected by a VOST component analytical result, the associated flag is not carried through to the VOST Tube Set Total.

[4] The VOST Condensate result was obtained by multiplying the sample's corresponding RDL or "hit" by the VOST condensate volume.

[5] This flag is the laboratory data flag that corresponds to EPA guidelines. The data flags for these samples are as follows:

- A "U" qualifier indicates that this analyte was analyzed for, but was not detected down to the MDL.
- An "E" flag indicates that the result exceeded the upper calibration range. The analytical result is therefore an estimated value.

- A "J" flag indicates that this compound was detected, but at a concentration below the laboratory RL. The analytical result is therefore an estimated value.
- A "B" flag indicates that this compound was found in the associated laboratory method blank. Under these conditions this value is regarded as an estimated value.
- A "Y" flag indicates that this compound is an indistinguishable isomer as a tentatively identified compound (TIC).
- An "N" flag indicates that there is presumptive evidence that this compound is present in the sample based on spectral evidence.
- An "M" flag indicates that this result was measured against the nearest internal standard and assumed a response factor of one (1).
- A "D" flag indicates that this result was obtained by a dilution of the sample. The original analysis yielded an analytical result that exceeded the calibration range.

6. Entries in this column are project-specific train total flags that are applied to the run total values and are not standard EPA data flags. These project-specific flags are utilized for the INEEL NWCF HLLWE Effluent Gas Emissions Inventory project and are defined as follows:

   - An "N" flag in this column indicates that the compound was not measured (detected) in any of the sampling train components, or fractions.
   - A "P" flag in this column indicates that the compound was measured (detected) in one or more of the train components, or fractions, but not in all of the sampling train fractions.
   - An "A" flag in this column indicates that the compound was measured (detected) in all of the sampling train components, or fractions.

7. The tentatively identified compounds (TICs) were identified by conducting a mass spectral library search using the NBS library of data.

VOST Summary - Run 4 Train Totals
Method 0031 Volatile Organic Compounds Analytical Results Summary
Table A-10. HLLWE Run ID: 0031-END-2

Field Sample Name: Volatile Organic Sampling Train (VOST) Totals
Sample Description: Tenax® and Anasorb 747® Tube Sets (Sets #1, #2, #3, and #4) and the VOST Condensate for Volatile Organic Compounds (VOC) Analysis

Analyte	CAS Registry Number	VOST Tube Set #1 (Total µg/Set)		VOST Tube Set #2 (Total µg/Set)		VOST Tube Set #3 (Total µg/Set)		VOST Tube Set #4 (Total µg/Set)		VOST Condensate (Total µg)		VOST Total[1] (Total µg)		*Project Specific Flag*[6]
		Risk Result[2]	Flag[3]	Risk Result[2]	Flag[3]	Risk Result[2]	Flag[3]	Risk Result[2]	Flag[3]	Risk Result[4]	Flag[5]	Total	Flag	
Target Compound List														
Acetone	67-64-1	< 0.46	J,B	0.59	B	1.3	B	1.4	B	0.081	J,B	< 3.8	J,B	A
Acrylonitrile	107-13-1	< 0.58		< 0.58		< 0.58		< 0.58		< 0.51		< 2.8		N
Benzene	71-43-2	< 0.052		< 0.034		< 0.044		< 0.047		< 0.027		< 0.20		P
Bromobenzene	108-86-1	< 0.020		< 0.020		< 0.020		< 0.020		< 0.036		< 0.12		N
Bromochloromethane	74-97-5	< 0.030		< 0.030		< 0.030		< 0.030		< 0.028		< 0.15		N
Bromodichloromethane	75-27-4	< 0.022		< 0.022		< 0.022		< 0.022		< 0.033		< 0.12		N
Bromoform	75-25-2	< 0.038		< 0.038		< 0.038		< 0.038		< 0.025		< 0.18		N
Bromomethane	74-83-9	< 0.030	J	< 0.055	J	< 0.041	J	< 0.049	J	< 0.020		< 0.20	J	P
2-Butanone	78-93-3	< 0.20		< 0.20		< 0.20		< 0.20		< 0.093		< 0.89		N
n-Butylbenzene	104-51-8	< 0.032		< 0.032		< 0.032		< 0.032		< 0.025		< 0.15		N
sec-Butylbenzene	135-98-8	< 0.017		< 0.017		< 0.017		< 0.017		< 0.017		< 0.085		N
tert-Butylbenzene	98-06-6	< 0.032		< 0.032		< 0.032		< 0.032		< 0.014		< 0.14		N
Carbon disulfide	75-15-0	0.22		< 0.036		< 0.18		< 0.19		< 0.011		< 0.64		P
Carbon tetrachloride	56-23-5	< 0.036	J	< 0.036		< 0.036		< 0.036	J	< 0.020		< 0.16	J	P
Chlorobenzene	108-90-7	< 0.017	J	< 0.017		< 0.017	J	< 0.017	J	< 0.027		< 0.095	J	P
Chlorodibromomethane	124-48-1	< 0.030		< 0.030		< 0.030		< 0.030		< 0.029		< 0.15		N
Chloroethane	75-00-3	< 0.036	J	< 0.036	J	< 0.036	J	< 0.036	J	< 0.014		< 0.16	J	P
Chloroform	67-66-3	< 0.15		< 0.036		< 0.087		< 0.087		< 0.031		< 0.39		P
Chloromethane	74-87-3	0.46		< 0.70		0.65	J	0.70		< 0.011		< 2.5	J	P
2-Chlorotoluene	95-49-8	< 0.0094		< 0.0094		< 0.0094		< 0.0094		< 0.021		< 0.059		N
4-Chlorotoluene	106-43-4	< 0.0094		< 0.0094		< 0.0094		< 0.0094		< 0.021		< 0.059		N
1,2-Dibromo-3-chloropropane	96-12-8	< 0.058		< 0.058		< 0.058		< 0.058		< 0.042		< 0.27		N
1,2-Dibromoethane	106-93-4	< 0.040		< 0.040		< 0.040		< 0.040		< 0.042		< 0.20		N
Dibromomethane	74-95-3	< 0.034		< 0.034		< 0.034		< 0.034		< 0.030		< 0.17		N
1,2-Dichlorobenzene	95-50-1	< 0.040		< 0.040		< 0.040		< 0.040		< 0.019		< 0.18		N
1,3-Dichlorobenzene	541-73-1	< 0.020		< 0.020		< 0.020		< 0.020		< 0.022		< 0.10		N
1,4-Dichlorobenzene	106-46-7	< 0.028		< 0.028		< 0.028		< 0.028		< 0.023		< 0.14		N

Last saved by Patti Carswell on 02/05/02 at 7:54 AM
E:\My Documents\HLLWE Sampling\Final Report\Appendix A\Table A-10. 0031-END-2.doc
Created on 2/5/2002 7:51 AM

VOST Summary - Run 4 Train Totals (Continued)
Method 0031 Volatile Organic Compounds Analytical Results Summary
Table A-10. HLLWE Run ID: 0031-END-2

Analyte	CAS Registry Number	VOST Tube Set #1 (Total µg/Set)		VOST Tube Set #2 (Total µg/Set)		VOST Tube Set #3 (Total µg/Set)		VOST Tube Set #4 (Total µg/Set)		VOST Condensate (Total µg)		VOST Total[1] (Total µg)		*Project Specific Flag[6]*
		Risk Result[2]	Flag[3]	Risk Result[2]	Flag[3]	Risk Result[2]	Flag[3]	Risk Result[2]	Flag[3]	Risk Result[4]	Flag[5]	Total	Flag	
Dichlorodifluoromethane	75-71-8	< 0.032	J	< 0.041		< 0.039		< 0.039		< 0.011		< 0.16	J	P
1,1-Dichloroethane	75-34-3	< 0.034		< 0.034		< 0.034		< 0.034		< 0.017		< 0.15		N
1,2-Dichloroethane	107-06-2	< 0.034		< 0.034		< 0.034		< 0.034		< 0.020		< 0.16		N
1,1-Dichloroethene	75-35-4	< 0.036	J	< 0.036		< 0.036	J	< 0.036	J	< 0.016		< 0.16	J	P
cis-1,2-Dichloroethene	156-59-2	< 0.032		< 0.032		< 0.032		< 0.032		< 0.021		< 0.15		N
trans-1,2-Dichloroethene	156-60-5	< 0.038		< 0.038		< 0.038		< 0.038		< 0.013		< 0.17		N
1,2-Dichloropropane	78-87-5	< 0.026		< 0.026		< 0.026		< 0.026		< 0.023		< 0.13		N
1,3-Dichloropropane	142-28-9	< 0.038		< 0.038		< 0.038		< 0.038		< 0.022		< 0.17		N
2,2-Dichloropropane	594-20-7	< 0.036		< 0.036		< 0.036		< 0.036		< 0.011		< 0.16		N
1,1-Dichloropropene	563-58-6	< 0.040		< 0.040		< 0.040		< 0.040		< 0.016		< 0.18		N
cis-1,3-Dichloropropene	10061-01-5	< 0.024		< 0.024		< 0.024		< 0.024		< 0.030		< 0.13		N
trans-1,3-Dichloropropene	10061-02-6	< 0.030		< 0.030		< 0.030		< 0.030		< 0.028		< 0.15		N
Ethylbenzene	100-41-4	< 0.018		< 0.018		< 0.018		< 0.018		< 0.021		< 0.093		N
Hexachlorobutadiene	87-68-3	< 0.050		< 0.050		< 0.050		< 0.050		< 0.025		< 0.23		N
2-Hexanone	591-78-6	< 0.13		< 0.13		< 0.13		< 0.13		< 0.036		< 0.56		N
Isopropylbenzene	98-82-8	< 0.013		< 0.013		< 0.013		< 0.013		< 0.018		< 0.070		N
p-Isopropyltoluene	99-87-6	< 0.024		< 0.024		< 0.024		< 0.024		< 0.018		< 0.11		N
Methylene chloride	75-09-2	0.13	B	0.071	B	0.10	B	0.11	B	< 0.019	J,B	< 0.43	J,B	A
4-Methyl-2-pentanone	108-10-1	< 0.14		< 0.14		< 0.14		< 0.14		< 0.030		< 0.59		N
Naphthalene	91-20-3	< 0.050		< 0.050		< 0.050		< 0.050		< 0.011		< 0.21		N
n-Propylbenzene	103-65-1	< 0.011		< 0.011		< 0.011		< 0.011		< 0.022		< 0.066		N
Styrene	100-42-5	< 0.014		< 0.014		< 0.014		< 0.014		< 0.022		< 0.078		N
1,1,1,2-Tetrachloroethane	630-20-6	< 0.019		< 0.019		< 0.019		< 0.019		< 0.023		< 0.099		N
1,1,2,2-Tetrachloroethane	79-34-5	< 0.050		< 0.050		< 0.050		< 0.050		< 0.025		< 0.23		N
Tetrachloroethene	127-18-4	< 0.032		< 0.032		< 0.032		< 0.032		< 0.021		< 0.15		N
Toluene	108-88-3	< 0.048		< 0.046		< 0.028	J	0.026	J	< 0.028		< 0.18	J	P
1,2,3-Trichlorobenzene	87-61-6	< 0.050		< 0.050		< 0.050		< 0.050		< 0.011		< 0.21		N
1,2,4-Trichlorobenzene	120-82-1	< 0.050		< 0.050		< 0.050		< 0.050		< 0.025		< 0.23		N
1,1,1-Trichloroethane	71-55-6	< 0.044		< 0.044		< 0.044		< 0.044		< 0.018		< 0.19		N

VOST Summary - Run 4 Train Totals (Continued)
Method 0031 Volatile Organic Compounds Analytical Results Summary
Table A-10. HLLWE Run ID: 0031-END-2

Analyte	CAS Registry Number	VOST Tube Set #1 (Total µg/Set)		VOST Tube Set #2 (Total µg/Set)		VOST Tube Set #3 (Total µg/Set)		VOST Tube Set #4 (Total µg/Set)		VOST Condensate (Total µg)		VOST Total[1] (Total µg)		*Project Specific Flag[6]*
		Risk Result[2]	Flag[3]	Risk Result[2]	Flag[3]	Risk Result[2]	Flag[3]	Risk Result[2]	Flag[3]	Risk Result[4]	Flag[5]	Total	Flag	
1,1,2-Trichloroethane	79-00-5	< 0.036		< 0.036		< 0.036		< 0.036		< 0.022		< 0.17		N
Trichloroethene	79-01-6	< 0.034		< 0.034		< 0.034		< 0.034		< 0.020		< 0.16		N
Trichlorofluoromethane	75-69-4	< 0.036	J	< 0.036		< 0.036	J	< 0.036	J	< 0.011		< 0.16	J	P
1,2,3-Trichloropropane	96-18-4	< 0.050		< 0.050		< 0.050		< 0.050		< 0.036		< 0.24		N
1,2,4-Trimethylbenzene	95-63-6	< 0.015		< 0.015		< 0.015		< 0.015		< 0.042		< 0.10		N
1,3,5-Trimethylbenzene	108-67-8	< 0.010		< 0.010		< 0.010		< 0.010		< 0.019		< 0.059		N
Vinyl chloride	75-01-4	< 0.020	J	< 0.026	J	< 0.026	J	< 0.027	J	< 0.068		< 0.17	J	P
m-Xylene & p-Xylene	136777-61-2	< 0.10		< 0.10		< 0.10		< 0.10		< 0.042		< 0.44		N
o-Xylene	95-47-6	< 0.013	J	< 0.013		< 0.013		< 0.013		< 0.025		< 0.077	J	P
TICs[7]														
Hexane, 2-methyl-	591-76-4	0.047		0.10		0.052		0.040		---		0.24	N,J,M	P
Pentane, 2,3-dimethyl-	565-59-3	---		0.10		---		0.037		---		0.14	N,J,M	P
Hexane, 3-methyl-	589-34-4	---		0.26		---		0.081		---		0.34	N,J,M	P
Pentane, 3-ethyl-	617-78-7	---		---		0.032		---		---		0.032	N,J,M	P
Cyclohexene	110-83-8	0.026		---		---		---		---		0.026	N,J,M	P
Cyclopentane, 1,2-dimethyl-, t	822-50-4	---		0.030		---		---		---		0.030	N,J,M	P
Cyclohexane, methyl-	108-87-2	0.027		0.065		0.031		---		---		0.12	N,J,M	P
Hexane, 2,4-dimethyl-	589-43-5	---		0.066		0.028		---		---		0.094	N,J,M	P
Benzonitrile	100-47-0	---		---		---		0.047		---		0.047	N,J,M	P
Undecane	1120-21-4	0.014		---		0.054		0.049		---		0.12	N,J,M	P
Undecane, 5-methyl-	1632-70-8	0.13		---		0.047		---		---		0.18	N,J,M	P
Dodecane	112-40-3	9.9		0.070		3.8		3.5		---		17	N,J,M	P
Undecane, 2,6-dimethyl-	17301-23-4	0.083		---		---		---		---		0.083	N,J,M	P
Tridecane	629-50-5	1.9		0.046		0.58		0.53		---		3.1	N,J,M	P
Tetradecane	629-59-4	0.58		0.096		0.35		0.36		---		1.4	N,J,M	P

Footnotes:

[1] The Method 0031 VOST Run Total (in Total µg) is the sum of results for the four (4) VOST tube sets and the condensate sample collected during the same sampling run using the following guidelines:

- When the train component analytical result is greater than the laboratory reporting limit (RL), the result included in the train total is the actual analytical result or "hit" determined by the laboratory.
- When the train component analytical result is greater than the reliable detection level (RDL), but less than the laboratory reporting limit (RL), the result included in the train total is the actual analytical result or "hit" determined by the laboratory and the corresponding "J" flag is carried through the calculation to the train total.
- When the train analytical component result is less than the RDL, but greater than the method detection limit (MDL), the result included in the train total is the RDL and the corresponding "J" flag is carried through the calculation to the train total.
- When the train component analytical result is not detected down to the MDL, the result included in the train total is the RDL and the corresponding "U" flag is carried through the calculation to the train total.
- It should be noted that when the RDL is selected as the default value using the guidelines above, but the RDL is greater than the RL, the RL is included in the train total.

The data flags attached to the VOST Total are the cumulative set of flags contributed by each train tube set included as part of the VOST total. A flag attached to a VOST component is carried through to the "VOST Total" column when the associated component analytical result is a significant number in comparison to the VOST Total. That is, if the VOST Total is affected by a VOST component analytical result, the associated flag is carried through to the VOST Total, but if the VOST Total is not affected by a VOST component, the associated flag is not carried through to the VOST Total. The combinations of train fractions are conducted following the standard practice of using significant figures found in ASTM E29-93a(1999), "Standard Practice for Using Significant Digits in Test Data to Determine Conformance with Specifications" and Severn Trent Laboratories standard operating procedure number QA-004, "Rounding and Significant Figures".

[2] The Method 0031 VOST Tube Set (Total µg/Set) result consists of the sum of the analytical results for the two (2) Tenax® resin tube contents (analyzed together) and the analytical result for the Anasorb 747® Tube contents. The calculation is as follows:

(Total µg on the Tenax® Tubes #1 and #2) + (Total µg on the Anasorb 747® Tube) = Total µg on the Method 0031 VOST tube set.
Therefore: (µg) + (µg) = Total µg/set

When listed, the less than (<) sign indicates that at least one sample fraction result is either a "non-detect" value down to the MDL of the measurement that carries, or an estimated "hit" value that is below the RDL. In either case, the final value included in the tube set total is the default RDL value and the actual value is known to be less than (<) the displayed result.

[3] The data flags in this column for the VOST Tube Set are the cumulative set of flags contributed by each individual train component included as part of the VOST total. A flag attached to a VOST component is carried through to the "VOST Tube Set" column when the associated component analytical result is a significant number in comparison to the VOST tube set total. That is, if the VOST Tube Set Total is affected by a VOST component analytical result, the associated flag is carried through to the VOST Tube Set Total, but if the VOST Tube Set Total is not affected by a VOST component analytical result, the associated flag is not carried through to the VOST Tube Set Total.

[4] The VOST Condensate result was obtained by multiplying the sample's corresponding RDL or "hit" by the VOST condensate volume.

[5] This flag is the laboratory data flag that corresponds to EPA guidelines. The data flags for these samples are as follows:

- A "U" qualifier indicates that this analyte was analyzed for, but was not detected down to the MDL.
- An "E" flag indicates that the result exceeded the upper calibration range. The analytical result is therefore an estimated value.

- A "J" flag indicates that this compound was detected, but at a concentration below the laboratory RL. The analytical result is therefore an estimated value.
- A "B" flag indicates that this compound was found in the associated laboratory method blank. Under these conditions this value is regarded as an estimated value.
- A "Y" flag indicates that this compound is an indistinguishable isomer as a tentatively identified compound (TIC).
- An "N" flag indicates that there is presumptive evidence that this compound is present in the sample based on spectral evidence.
- An "M" flag indicates that this result was measured against the nearest internal standard and assumed a response factor of one (1).
- A "D" flag indicates that this result was obtained by a dilution of the sample. The original analysis yielded an analytical result that exceeded the calibration range.

[6] Entries in this column are project-specific train total flags that are applied to the run total values and are not standard EPA data flags. These project-specific flags are utilized for the INEEL NWCF HLLWE Effluent Gas Emissions Inventory project and are defined as follows:

- An "N" flag in this column indicates that the compound was not measured (detected) in any of the sampling train components, or fractions.
- A "P" flag in this column indicates that the compound was measured (detected) in one or more of the train components, or fractions, but not in all of the sampling train fractions.
- An "A" flag in this column indicates that the compound was measured (detected) in all of the sampling train components, or fractions.

[7] The tentatively identified compounds (TICs) were identified by conducting a mass spectral library search using the NBS library of data.

VOST Analytical Results Summary
Table A-11. Run 2, VOST Tenax® Tube Pair Field Blank

Field Sample Name: Volatile Organic Sampling Train (VOST)
Sample Description: VOST Tenax® Tube Pair Field Blank for Volatile Organic Compounds Analysis
Field Sample Number(s): A-3392
STL Sample Number(s). H1F250144-019

Analyte	CAS Registry Number	Tenax® Tube Pair Field Blank (µg/Sample)					
		Lab Result[1]	MDL[2]	RDL[3]	RL[4]	Risk Result[5]	Flag[6]
Acetone	67-64-1	0.027	0.024	**0.063**	0.10	< 0.063	J,B
Acrylonitrile	107-13-1	ND	0.11	**0.29**	0.50	< 0.29	
Benzene	71-43-2	ND	0.0064	**0.017**	0.025	< 0.017	
Bromobenzene	108-86-1	ND	0.0039	**0.010**	0.025	< 0.010	
Bromochloromethane	74-97-5	ND	0.0056	**0.015**	0.025	< 0.015	
Bromodichloromethane	75-27-4	ND	0.0042	**0.011**	0.025	< 0.011	
Bromoform	75-25-2	ND	0.0074	**0.019**	0.025	< 0.019	
Bromomethane	74-83-9	ND	0.0059	**0.015**	0.050	< 0.015	
2-Butanone	78-93-3	ND	0.038	**0.10**	0.10	< 0.10	
n-Butylbenzene	104-51-8	ND	0.0061	**0.016**	0.025	< 0.016	
sec-Butylbenzene	135-98-8	ND	0.0032	**0.0084**	0.025	< 0.0084	
tert-Butylbenzene	98-06-6	ND	0.0062	**0.016**	0.025	< 0.016	
Carbon disulfide	75-15-0	ND	0.0070	**0.018**	0.025	< 0.018	
Carbon tetrachloride	56-23-5	ND	0.0069	**0.018**	0.025	< 0.018	
Chlorobenzene	108-90-7	ND	0.0032	**0.0084**	0.025	< 0.0084	
Chlorodibromomethane	124-48-1	ND	0.0056	**0.015**	0.025	< 0.015	
Chloroethane	75-00-3	ND	0.0068	**0.018**	0.050	< 0.018	
Chloroform	67-66-3	ND	0.0070	**0.018**	0.025	< 0.018	
Chloromethane	74-87-3	ND	0.0048	**0.013**	0.050	< 0.013	
2-Chlorotoluene	95-49-8	ND	0.0018	**0.0047**	0.025	< 0.0047	
4-Chlorotoluene	106-43-4	ND	0.0018	**0.0047**	0.025	< 0.0047	
1,2-Dibromo-3-chloropropane	96-12-8	ND	0.011	**0.029**	0.050	< 0.029	
1,2-Dibromoethane	106-93-4	ND	0.0075	**0.020**	0.025	< 0.020	
Dibromomethane	74-95-3	ND	0.0064	**0.017**	0.025	< 0.017	
1,2-Dichlorobenzene	95-50-1	ND	0.0077	**0.020**	0.025	< 0.020	
1,3-Dichlorobenzene	541-73-1	ND	0.0038	**0.010**	0.025	< 0.010	
1,4-Dichlorobenzene	106-46-7	ND	0.0055	**0.014**	0.025	< 0.014	
Dichlorodifluoromethane	75-71-8	ND	0.0051	**0.013**	0.025	< 0.013	

VOST Analytical Results Summary (Continued)
Table A-11. Run 2, VOST Tenax® Tube Pair Field Blank

Analyte	CAS Registry Number	Tenax® Tube Pair Field Blank (µg/Sample)					
		Lab Result[1]	MDL[2]	RDL[3]	RL[4]	Risk Result[5]	Flag[6]
1,1-Dichloroethane	75-34-3	ND	0.0064	**0.017**	0.025	< 0.017	
1,2-Dichloroethane	107-06-2	ND	0.0066	**0.017**	0.025	< 0.017	
1,1-Dichloroethene	75-35-4	ND	0.0067	**0.018**	0.025	< 0.018	
cis-1,2-Dichloroethene	156-59-2	ND	0.0062	**0.016**	0.025	< 0.016	
trans-1,2-Dichloroethene	156-60-5	ND	0.0074	**0.019**	0.025	< 0.019	
1,2-Dichloropropane	78-87-5	ND	0.0049	**0.013**	0.025	< 0.013	
1,3-Dichloropropane	142-28-9	ND	0.0073	**0.019**	0.025	< 0.019	
2,2-Dichloropropane	594-20-7	ND	0.0070	**0.018**	0.025	< 0.018	
1,1-Dichloropropene	563-58-6	ND	0.0077	**0.020**	0.025	< 0.020	
cis-1,3-Dichloropropene	10061-01-5	ND	0.0046	**0.012**	0.025	< 0.012	
trans-1,3-Dichloropropene	10061-02-6	ND	0.0059	**0.015**	0.025	< 0.015	
Ethylbenzene	100-41-4	ND	0.0035	**0.0092**	0.025	< 0.0092	
Hexachlorobutadiene	87-68-3	ND	0.012	0.031	**0.025**	< 0.025	
2-Hexanone	591-78-6	ND	0.024	**0.063**	0.10	< 0.063	
Isopropylbenzene	98-82-8	ND	0.0024	**0.0063**	0.025	< 0.0063	
p-Isopropyltoluene	99-87-6	ND	0.0044	**0.012**	0.025	< 0.012	
Methylene chloride	75-09-2	**0.025**	0.016	0.042	0.025	0.025	B
4-Methyl-2-pentanone	108-10-1	ND	0.027	**0.071**	0.10	< 0.071	
Naphthalene	91-20-3	ND	0.014	0.037	**0.025**	< 0.025	
n-Propylbenzene	103-65-1	ND	0.0021	**0.0055**	0.025	< 0.0055	
Styrene	100-42-5	ND	0.0026	**0.0068**	0.025	< 0.0068	
1,1,1,2-Tetrachloroethane	630-20-6	ND	0.0037	**0.0097**	0.025	< 0.0097	
1,1,2,2-Tetrachloroethane	79-34-5	ND	0.0097	**0.025**	0.025	< 0.025	
Tetrachloroethene	127-18-4	ND	0.0062	**0.016**	0.025	< 0.016	
Toluene	108-88-3	ND	0.0025	**0.0066**	0.025	< 0.0066	
1,2,3-Trichlorobenzene	87-61-6	ND	0.014	0.037	**0.025**	< 0.025	
1,2,4-Trichlorobenzene	120-82-1	ND	0.013	0.034	**0.025**	< 0.025	
1,1,1-Trichloroethane	71-55-6	ND	0.0082	**0.022**	0.025	< 0.022	
1,1,2-Trichloroethane	79-00-5	ND	0.0070	**0.018**	0.025	< 0.018	
Trichloroethene	79-01-6	ND	0.0065	**0.017**	0.025	< 0.017	
Trichlorofluoromethane	75-69-4	ND	0.0068	**0.018**	0.050	< 0.018	
1,2,3-Trichloropropane	96-18-4	ND	0.010	0.026	**0.025**	< 0.025	
1,2,4-Trimethylbenzene	95-63-6	ND	0.0029	**0.0076**	0.025	< 0.0076	

VOST Analytical Results Summary (Continued)
Table A-11. Run 2, VOST Tenax® Tube Pair Field Blank

Analyte	CAS Registry Number	Tenax® Tube Pair Field Blank (µg/Sample)					
		Lab Result[1]	MDL[2]	RDL[3]	RL[4]	Risk Result[5]	Flag[6]
1,3,5-Trimethylbenzene	108-67-8	ND	0.0019	**0.0050**	0.025	< 0.0050	
Vinyl chloride	75-01-4	ND	0.0025	**0.0066**	0.025	< 0.0066	
m-Xylene & p-Xylene	136777-61-2	ND	0.025	0.066	**0.050**	< 0.050	
o-Xylene	95-47-6	ND	0.0025	**0.0066**	0.025	< 0.0066	

Surrogate Recoveries:

Surrogate Compound	Percent Recovery (%)	Laboratory Recovery Limits (%)
Dibromofluoromethane	76%	50-150%
1,2-Dichloroethane-d_4	70%	50-150%
Toluene-d_8	102%	50-150%
Bromofluorobenzene	86%	50-150%

VOST Analytical Results Summary (Continued)
Table A-11. Run 2, VOST Tenax® Tube Pair Field Blank

Sample Collection and Analysis Dates:

	Date
Date(s) Collected:	June 21, 2001
Date(s) of Extraction:	July 02, 2001
Date(s) of Analysis:	July 02, 2001

Sample Collection. Preparation. and Analysis Dates:

SW-846 Method 0031: "Sampling Method for Volatile Organic Compounds (SMVOC)"
SW-846 Method 5041A: "Analysis for Desorption of Sorbent Cartridges from Volatile Organic Sampling Train (VOST)"
SW-846 Method 8260B: "Volatile Organic Compounds by Gas Chromatography/Mass Spectrometry (GC/MS)"

VOST Tentatively Identified Compound (TIC) Summary

TIC[7]	CAS Number	Approximate Retention Time (min.)	Sample Result (µg)	TIC Flag[6]
Hexane, 3-methyl-	589-34-4	4.46	0.028	N,J,M

Footnotes:

[1] This value is the laboratory sample result. When the analytical result is "ND" or not detected, the laboratory analysis did not detect the analyte down to the MDL.

[2] This value is the laboratory Method Detection Limit (MDL) derived according to requirements outlined in 40 CFR Part 136, Appendix B.

[3] The RDL is the Reliable Detection Limit. The RDL is the detection level recommended by EPA's National Research Laboratory in Cincinnati, Ohio, Environmental Monitoring Systems Laboratory (EMSL) in Cincinnati, Ohio, American Chemical Society (ACS) Committee on Environmental Improvement and the Drinking Water Standards Division (DWSD). It is defined as 2.623 times the MDL (2.623 X MDL).

[4] The RL is the laboratory Reporting Limit (RL).

[5] Based on the selection rules, the **bolded** value is the value or default value assigned to the analyte using the following guidelines:

- When the analytical result is greater than the laboratory reporting limit (RL), the result selected by boldface type is the actual analytical result or "hit" determined by the laboratory.
- When the analytical result is greater than the reliable detection level (RDL), but less than the laboratory reporting limit (RL), the result selected by boldface type is the actual analytical result or "hit" determined by the laboratory.
- When the analytical result is less than the RDL, but greater than the method detection limit (MDL), the result selected by boldface type is the RDL.
- When the analytical result is not detected down to the MDL, the result selected by boldface type is the RDL.
- It should be noted that when the RDL is selected using the guidelines above, but the RL is less than the RDL, the RL is included as the "Risk Result".

[6] This flag is the laboratory data flag that corresponds to EPA guidelines. The data flags for these samples are as follows:

- A "U" qualifier indicates that this analyte was analyzed for, but was not detected down to the MDL.
- An "E" flag indicates that the result exceeded the upper calibration range. The analytical result is therefore an estimated value.
- A "J" flag indicates that this compound was detected, but at a concentration below the laboratory RL. The analytical result is therefore an estimated value.
- A "B" flag indicates that this compound was found in the associated laboratory method blank. Under these conditions this value is regarded as an estimated value.
- A "Y" flag indicates that this compound is an indistinguishable isomer as a tentatively identified compound (TIC).
- An "N" flag indicates that there is presumptive evidence that this compound is present in the sample based on spectral evidence.
- An "M" flag indicates that this result was measured against the nearest internal standard and assumed a response factor of one (1).
- A "D" flag indicates that this result was obtained by a dilution of the sample. The original analysis yielded an analytical result that exceeded the calibration range.

[7] The tentatively identified compounds (TICs) were identified by conducting a mass spectral library search using the NBS library of data.

VOST Analytical Results Summary
Table A-12. Run 2, VOST Anasorb 747 Tube Field Blank

Field Sample Name: Volatile Organic Sampling Train (VOST)
Sample Description: VOST Anasorb 747 Tube Field Blank for Volatile Organic Compounds Analysis
Field Sample Number(s): A-3393
STL Sample Number(s). H1F250144-020

Analyte	CAS Registry Number	Anasorb 747 Tube Field Blank (µg/Sample)					
		Lab Result[1]	MDL[2]	RDL[3]	RL[4]	Risk Result[5]	Flag[6]
Acetone	67-64-1	0.034	0.024	**0.063**	0.10	< 0.063	J,B
Acrylonitrile	107-13-1	ND	0.11	**0.29**	0.50	< 0.29	
Benzene	71-43-2	ND	0.0064	**0.017**	0.025	< 0.017	
Bromobenzene	108-86-1	ND	0.0039	**0.010**	0.025	< 0.010	
Bromochloromethane	74-97-5	ND	0.0056	**0.015**	0.025	< 0.015	
Bromodichloromethane	75-27-4	ND	0.0042	**0.011**	0.025	< 0.011	
Bromoform	75-25-2	ND	0.0074	**0.019**	0.025	< 0.019	
Bromomethane	74-83-9	ND	0.0059	**0.015**	0.050	< 0.015	
2-Butanone	78-93-3	ND	0.038	**0.10**	0.10	< 0.10	
n-Butylbenzene	104-51-8	ND	0.0061	**0.016**	0.025	< 0.016	
sec-Butylbenzene	135-98-8	ND	0.0032	**0.0084**	0.025	< 0.0084	
tert-Butylbenzene	98-06-6	ND	0.0062	**0.016**	0.025	< 0.016	
Carbon disulfide	75-15-0	ND	0.0070	**0.018**	0.025	< 0.018	
Carbon tetrachloride	56-23-5	ND	0.0069	**0.018**	0.025	< 0.018	
Chlorobenzene	108-90-7	ND	0.0032	**0.0084**	0.025	< 0.0084	
Chlorodibromomethane	124-48-1	ND	0.0056	**0.015**	0.025	< 0.015	
Chloroethane	75-00-3	ND	0.0068	**0.018**	0.050	< 0.018	
Chloroform	67-66-3	ND	0.0070	**0.018**	0.025	< 0.018	
Chloromethane	74-87-3	ND	0.0048	**0.013**	0.050	< 0.013	
2-Chlorotoluene	95-49-8	ND	0.0018	**0.0047**	0.025	< 0.0047	
4-Chlorotoluene	106-43-4	ND	0.0018	**0.0047**	0.025	< 0.0047	
1,2-Dibromo-3-chloropropane	96-12-8	ND	0.011	**0.029**	0.050	< 0.029	
1,2-Dibromoethane	106-93-4	ND	0.0075	**0.020**	0.025	< 0.020	
Dibromomethane	74-95-3	ND	0.0064	**0.017**	0.025	< 0.017	
1,2-Dichlorobenzene	95-50-1	ND	0.0077	**0.020**	0.025	< 0.020	
1,3-Dichlorobenzene	541-73-1	ND	0.0038	**0.010**	0.025	< 0.010	
1,4-Dichlorobenzene	106-46-7	ND	0.0055	**0.014**	0.025	< 0.014	
Dichlorodifluoromethane	75-71-8	ND	0.0051	**0.013**	0.025	< 0.013	

VOST Analytical Results Summary (Continued)
Table A-12. Run 2, VOST Anasorb 747 Tube Field Blank

Analyte	CAS Registry Number	Anasorb 747 Tube Field Blank (µg/Sample)					
		Lab Result[1]	MDL[2]	RDL[3]	RL[4]	Risk Result[5]	Flag[6]
1,1-Dichloroethane	75-34-3	ND	0.0064	**0.017**	0.025	< 0.017	
1,2-Dichloroethane	107-06-2	ND	0.0066	**0.017**	0.025	< 0.017	
1,1-Dichloroethene	75-35-4	ND	0.0067	**0.018**	0.025	< 0.018	
cis-1,2-Dichloroethene	156-59-2	ND	0.0062	**0.016**	0.025	< 0.016	
trans-1,2-Dichloroethene	156-60-5	ND	0.0074	**0.019**	0.025	< 0.019	
1,2-Dichloropropane	78-87-5	ND	0.0049	**0.013**	0.025	< 0.013	
1,3-Dichloropropane	142-28-9	ND	0.0073	**0.019**	0.025	< 0.019	
2,2-Dichloropropane	594-20-7	ND	0.0070	**0.018**	0.025	< 0.018	
1,1-Dichloropropene	563-58-6	ND	0.0077	**0.020**	0.025	< 0.020	
cis-1,3-Dichloropropene	10061-01-5	ND	0.0046	**0.012**	0.025	< 0.012	
trans-1,3-Dichloropropene	10061-02-6	ND	0.0059	**0.015**	0.025	< 0.015	
Ethylbenzene	100-41-4	ND	0.0035	**0.0092**	0.025	< 0.0092	
Hexachlorobutadiene	87-68-3	ND	0.012	0.031	**0.025**	< 0.025	
2-Hexanone	591-78-6	ND	0.024	**0.063**	0.10	< 0.063	
Isopropylbenzene	98-82-8	ND	0.0024	**0.0063**	0.025	< 0.0063	
p-Isopropyltoluene	99-87-6	ND	0.0044	**0.012**	0.025	< 0.012	
Methylene chloride	75-09-2	**0.027**	0.016	0.042	0.025	0.027	B
4-Methyl-2-pentanone	108-10-1	ND	0.027	**0.071**	0.10	< 0.071	
Naphthalene	91-20-3	ND	0.014	0.037	**0.025**	< 0.025	
n-Propylbenzene	103-65-1	ND	0.0021	**0.0055**	0.025	< 0.0055	
Styrene	100-42-5	ND	0.0026	**0.0068**	0.025	< 0.0068	
1,1,1,2-Tetrachloroethane	630-20-6	ND	0.0037	**0.0097**	0.025	< 0.0097	
1,1,2,2-Tetrachloroethane	79-34-5	ND	0.0097	**0.025**	0.025	< 0.025	
Tetrachloroethene	127-18-4	ND	0.0062	**0.016**	0.025	< 0.016	
Toluene	108-88-3	**0.12**	0.0025	0.0066	0.025	0.12	
1,2,3-Trichlorobenzene	87-61-6	ND	0.014	0.037	**0.025**	< 0.025	
1,2,4-Trichlorobenzene	120-82-1	ND	0.013	0.034	**0.025**	< 0.025	
1,1,1-Trichloroethane	71-55-6	ND	0.0082	**0.022**	0.025	< 0.022	
1,1,2-Trichloroethane	79-00-5	ND	0.0070	**0.018**	0.025	< 0.018	
Trichloroethene	79-01-6	ND	0.0065	**0.017**	0.025	< 0.017	
Trichlorofluoromethane	75-69-4	ND	0.0068	**0.018**	0.050	< 0.018	
1,2,3-Trichloropropane	96-18-4	ND	0.010	0.026	**0.025**	< 0.025	
1,2,4-Trimethylbenzene	95-63-6	ND	0.0029	**0.0076**	0.025	< 0.0076	

VOST Analytical Results Summary (Continued)
Table A-12. Run 2, VOST Anasorb 747 Tube Field Blank

Analyte	CAS Registry Number	Anasorb 747 Tube Field Blank (µg/Sample)					
		Lab Result[1]	MDL[2]	RDL[3]	RL[4]	Risk Result[5]	Flag[6]
1,3,5-Trimethylbenzene	108-67-8	ND	0.0019	**0.0050**	0.025	< 0.0050	
Vinyl chloride	75-01-4	ND	0.0025	**0.0066**	0.025	< 0.0066	
m-Xylene & p-Xylene	136777-61-2	ND	0.025	0.066	**0.050**	< 0.050	
o-Xylene	95-47-6	ND	0.0025	**0.0066**	0.025	< 0.0066	

Surrogate Recoveries:

Surrogate Compound	Percent Recovery (%)	Laboratory Recovery Limits (%)
Dibromofluoromethane	77%	50-150%
1,2-Dichloroethane-d_4	68%	50-150%
Toluene-d_8	99%	50-150%
Bromofluorobenzene	73%	50-150%

VOST Analytical Results Summary (Continued)
Table A-12. Run 2, VOST Anasorb 747 Tube Field Blank

Sample Collection and Analysis Dates:

	Date
Date(s) Collected:	June 21, 2001
Date(s) of Extraction:	July 02, 2001
Date(s) of Analysis:	July 02, 2001

Sample Collection. Preparation. and Analysis Dates:

SW-846 Method 0031: "Sampling Method for Volatile Organic Compounds (SMVOC)"
SW-846 Method 5041A: "Analysis for Desorption of Sorbent Cartridges from Volatile Organic Sampling Train (VOST)"
SW-846 Method 8260B: "Volatile Organic Compounds by Gas Chromatography/Mass Spectrometry (GC/MS)"

VOST Tentatively Identified Compound (TIC) Summary

TIC[7]	CAS Number	Approximate Retention Time (min.)	Sample Result (µg)	TIC Flag[6]
Cyclohexane, methyl-	108-87-2	5.32	0.17	N,J,M
Hexane, 2,4-dimethyl-	589-43-5	5.40	0.16	N,J,M
Cyclopentane, ethyl-	1640-89-7	5.49	0.044	N,J,M
Pentane, 2,3-dimethyl-	565-59-3	4.36	0.30	N,J,M
Pentane, 3,3-dimethyl-	562-49-2	4.13	0.064	N,J,M
Hexane, 2-methyl-	591-76-4	4.30	0.26	N,J,M

Footnotes:

[1] This value is the laboratory sample result. When the analytical result is "ND" or not detected, the laboratory analysis did not detect the analyte down to the MDL.

[2] This value is the laboratory Method Detection Limit (MDL) derived according to requirements outlined in 40 CFR Part 136, Appendix B.

[3] The RDL is the Reliable Detection Limit. The RDL is the detection level recommended by EPA's National Research Laboratory in Cincinnati, Ohio, Environmental Monitoring Systems Laboratory (EMSL) in Cincinnati, Ohio, American Chemical Society (ACS) Committee on Environmental Improvement and the Drinking Water Standards Division (DWSD). It is defined as 2.623 times the MDL (2.623 X MDL).

[4] The RL is the laboratory Reporting Limit (RL).

[5] Based on the selection rules, the **bolded** value is the value or default value assigned to the analyte using the following guidelines:

- When the analytical result is greater than the laboratory reporting limit (RL), the result selected by boldface type is the actual analytical result or "hit" determined by the laboratory.
- When the analytical result is greater than the reliable detection level (RDL), but less than the laboratory reporting limit (RL), the result selected by boldface type is the actual analytical result or "hit" determined by the laboratory.
- When the analytical result is less than the RDL, but greater than the method detection limit (MDL), the result selected by boldface type is the RDL.
- When the analytical result is not detected down to the MDL, the result selected by boldface type is the RDL.
- It should be noted that when the RDL is selected using the guidelines above, but the RL is less than the RDL, the RL is included as the "Risk Result".

[6] This flag is the laboratory data flag that corresponds to EPA guidelines. The data flags for these samples are as follows:

- A "U" qualifier indicates that this analyte was analyzed for, but was not detected down to the MDL.
- An "E" flag indicates that the result exceeded the upper calibration range. The analytical result is therefore an estimated value.
- A "J" flag indicates that this compound was detected, but at a concentration below the laboratory RL. The analytical result is therefore an estimated value.
- A "B" flag indicates that this compound was found in the associated laboratory method blank. Under these conditions this value is regarded as an estimated value.
- A "Y" flag indicates that this compound is an indistinguishable isomer as a tentatively identified compound (TIC).
- An "N" flag indicates that there is presumptive evidence that this compound is present in the sample based on spectral evidence.
- An "M" flag indicates that this result was measured against the nearest internal standard and assumed a response factor of one (1).
- A "D" flag indicates that this result was obtained by a dilution of the sample. The original analysis yielded an analytical result that exceeded the calibration range.

[7] The tentatively identified compounds (TICs) were identified by conducting a mass spectral library search using the NBS library of data.

M5 Particulate and Anion Train - Run 1
Analytical Results Summary
Table A-13. HLLWE Run ID: 0050-STRT-1

Field Sample Name: M5 HCl/Cl_2 and Particulate Train
Sample Description: Particulate Filter and Acetone Probe Rinse Samples for Particulate Determination
Field Sample Number(s): A-3308 and A-3309
STL Sample No.: H1F210104-001 and H1F210104-002

Analyte	Particulate Filter Particulate Weight (µg)	Acetone Probe Rinse Particulate Weight (µg)	Particulate [1] Total (Total µg of Particulate)
Particulate	100 B	3,400	3,500 B

Field Sample Name: M5 HCl/Cl_2 and Particulate Train
Sample Description: 0.1N H_2SO_4 Impinger Solution for Chloride, Fluoride, Nitrate, and Nitrite Analysis
Field Sample Number(s): A-3310
STL Sample No.: H1F210104-003

Analyte	Laboratory Result[2] (Total mg)	MDL[3]	RDL[4]	RL[5]	Risk Result (Total mg)[6]	Flag[7]
Chloride (as HCl)[8]	1.9	1.7	4.5	**2.9**	< 2.9	B
Fluoride (as HF)[9]	ND	0.075	**0.20**	1.5	< 0.20	
Nitrate (as HNO_3)[10]	**11**	0.072	0.19	0.72	11	
Nitrite (as HNO_2)[11]	ND	0.073	**0.19**	0.73	< 0.19	

M5 Particulate and Anion Train - Run 1
Analytical Results Summary (Continued)
Table A-13. HLLWE Run ID: 0050-STRT-1

Field Sample Name: M5 HCl/Cl_2 and Particulate Train
Sample Description: 0.1N NaOH Impinger Solution for Chlorine, Fluoride, Nitrate, and Nitrite Analysis
Field Sample Number(s): A-3311
STL Sample No.: H1F210104-004

Analyte	Laboratory Result[2] (Total mg)	MDL[3]	RDL[4]	RL[5]	Risk Result (Total mg)[6]	Flag[7]
Chlorine (as Cl_2)[12]	ND	0.16	0.42	**0.29**	< 0.29	
Fluoride (as HF)[9]	ND	0.075	**0.20**	1.5	< 0.20	
Nitrate (as HNO_3)[10]	**0.85**	0.014	0.037	0.14	0.85	
Nitrite (as HNO_2)[11]	**1.4**	0.073	0.19	0.73	1.4	

Sample Collection and Analysis Dates:

	Particulate Filter	Acetone Probe Rinse	0.1N H_2SO_4 Impinger Composite	0.1N NaOH Impinger Composite
Date(s) Collected:	June 07, 2001	June 07, 2001	June 07, 2001	June 07, 2001
Date(s) of Preparation-Analysis:	June 22-26, 2001	June 25-26, 2001	June 29, 2001	July 02, 2001

Preparation and Analysis Methods:

EPA Method 5: "Particulate Emissions from Stationary Sources"
SW-846 Method 9056: "Determination of Inorganic Anions by Ion Chromatography"

M5 Particulate and Anion Train - Run 1
Analytical Results Summary (Continued)
Table A-13. HLLWE Run ID: 0050-STRT-1

Footnotes:

---

[1] The Total M-5 Particulate result is the sum of the acetone probe rinse particulate weight and the particulate filter particulate weight.

[2] This value is the laboratory sample result. When the analytical result is "ND" or not detected, the laboratory analysis did not detect the analyte down to the method detection limit (MDL).

[3] This value is the laboratory MDL derived according to requirements outlined in 40 CFR Part 136, Appendix B. The MDL has been calculated as Cl_2, HCl, HF, HNO_3, or HNO_2, as appropriate.

[4] The RDL is the Reliable Detection Limit. The RDL is the detection level recommended by EPA's National Research Laboratory in Cincinnati, Ohio, Environmental Monitoring Systems Laboratory (EMSL) in Cincinnati, Ohio, American Chemical Society (ACS) Committee on Environmental Improvement and the Drinking Water Standards Division (DWSD). It is defined as 2.623 times the MDL (2.623 X MDL). The RDL has been calculated as Cl_2, HCl, HF, HNO_3, or HNO_2, as appropriate.

[5] The RL is the laboratory Reporting Limit (RL). The RL has been calculated as Cl_2, HCl, HF, HNO_3, or HNO_2, as appropriate.

[6] The **bolded** value for each analyte is the value or default value assigned to the analyte. This value was determined using the following guidelines:

- When the analytical result is greater than the laboratory reporting limit (RL), the "Risk Result" is the actual analytical result or "hit" determined by the laboratory.
- When the analytical result is greater than the reliable detection level (RDL), but less than the laboratory reporting limit (RL), the "Risk Result" is the actual analytical result or "hit" determined by the laboratory.
- When the analytical result is less than the RDL, but greater than the method detection limit (MDL), the default value is the RDL.
- When the analytical result is not detected down to the MDL, the "Risk Result" is the RDL.
- It should be noted that when the RDL is selected as the default value using the guidelines above, but the RDL is greater than the RL, the RL is used as the risk result.

[7] This flag is the laboratory data flag that corresponds to EPA guidelines. The data flags for these samples are as follows:

- A "U" flag indicates that this analyte was analyzed for, but was not detected down to the MDL.

  A "B" flag indicates that the result for this analyte was below the RL and is therefore considered to be an estimated value.

[8] The calculation of the total milligrams (mg) of HCl in the Impinger Composite is as follows:

$$\text{Total mg}_{(HCl)} = \text{mg of } Cl^- \times \frac{(36.46 \text{ mg HCl})}{(35.45 \text{ mg } Cl^-)}$$

Where: 36.46 = the molecular weight of HCl in mg/mg-mole and
35.45 = the atomic weight of Cl^- in mg/mg-mole.

M5 Particulate and Anion Train - Run 1
Analytical Results Summary (Continued)
Table A-13. HLLWE Run ID: 0050-STRT-1

[9] The calculation of the total milligrams (mg) of HF in Impinger Composite is as follows:

$$\text{Total mg}_{(HF)} = \text{mg of } F^- \times \frac{(20.01\,\text{mg HF})}{(19.00\,\text{mg } F^-)}$$

Where: 20.01 = the molecular weight of HF in mg/mg-mole and
19.00 = the atomic weight of F^- in mg/mg-mole.

[10] The calculation of the total milligrams (mg) of HNO_3 in the Impinger Composite is as follows:

$$\text{Total mg}_{(HNO_3)} = \text{mg of } NO_3^- \times \frac{(63.01\text{ mg } HNO_3)}{(62.00\text{ mg } NO_3^-)}$$

Where: 63.01 = the molecular weight of HNO_3 in mg/mg-mole and
62.00 = the molecular weight of NO_3^- in mg/mg-mole.

[11] The calculation of the total milligrams (mg) of HNO_2 in the Impinger Composite is as follows:

$$\text{Total mg}_{(HNO_2)} = \text{mg of } NO_2^- \times \frac{(47.01\text{ mg } HNO_2)}{(46.01\text{ mg } NO_2^-)}$$

Where: 47.01 = the molecular weight of HNO_2 in mg/mg-mole and
46.01 = the molecular weight of NO_2^- in mg/mg-mole.

[12] No additional calculation was required to be performed to obtain the total milligrams (mg) of Cl_2 in the NaOH Impinger Composite. Note that the NaOH Impingers were treated with NaS_2O_3 prior to the analysis of chlorine.

M5 Particulate and Anion Train - Run 3
Analytical Results Summary
Table A-14. HLLWE Run ID: 0050-END-1

Field Sample Name: M5 HCl/Cl_2 and Particulate Train
Sample Description: Particulate Filter and Acetone Probe Rinse Samples for Particulate Determination
Field Sample Number(s): A-3338 and A-3339
STL Sample No.: H1F210104-018 and H1F210104-019

Analyte	Particulate Filter Particulate Weight (µg)	Acetone Probe Rinse Particulate Weight (µg)	Particulate [1] Total (Total µg of Particulate)
Particulate	300 B	2,600	2,900 B

Field Sample Name: M5 HCl/Cl_2 and Particulate Train
Sample Description: 0.1N H_2SO_4 Impinger Solution for Chloride, Fluoride, Nitrate, and Nitrite Analysis
Field Sample Number(s): A-3340
STL Sample No.: H1F210104-020

Analyte	Laboratory Result[2] (Total mg)	MDL[3]	RDL[4]	RL[5]	Risk Result (Total mg)[6]	Flag[7]
Chloride (as HCl)[8]	2.1	1.7	4.4	**2.9**	< 2.9	B
Fluoride (as HF)[9]	ND	0.075	**0.20**	1.5	< 0.20	
Nitrate (as HNO_3)[10]	**9.8**	0.072	0.19	0.72	9.8	
Nitrite (as HNO_2)[11]	ND	0.073	**0.19**	0.73	< 0.19	

M5 Particulate and Anion Train - Run 3
Analytical Results Summary (Continued)
Table A-14. HLLWE Run ID: 0050-END-1

Field Sample Name: M5 HCl/Cl_2 and Particulate Train
Sample Description: 0.1N NaOH Impinger Solution for Chlorine, Fluoride, Nitrate, and Nitrite Analysis
Field Sample Number(s): A-3341
STL Sample No.: H1F210104-021

Analyte	Laboratory Result[2] (Total mg)	MDL[3]	RDL[4]	RL[5]	Risk Result (Total mg)[6]	Flag[7]
Chlorine (as Cl_2)[12]	0.42	0.32	0.85	**0.57**	< 0.57	B
Fluoride (as HF)[9]	ND	0.075	**0.20**	1.5	< 0.20	
Nitrate (as HNO_3)[10]	**0.61**	0.014	0.038	0.14	0.61	
Nitrite (as HNO_2)[11]	**3.6**	0.029	0.076	0.29	3.6	

Sample Collection and Analysis Dates:

	Particulate Filter	Acetone Probe Rinse	0.1N H_2SO_4 Impinger Composite	0.1N NaOH Impinger Composite
Date(s) Collected:	June 07, 2001	June 07, 2001	June 07, 2001	June 07, 2001
Date(s) of Preparation-Analysis:	June 22-26, 2001	June 25-26, 2001	June 29, 2001	July 02, 2001

Preparation and Analysis Methods:

EPA Method 5: "Particulate Emissions from Stationary Sources"
SW-846 Method 9056: "Determination of Inorganic Anions by Ion Chromatography"

M5 Particulate and Anion Train - Run 3
Analytical Results Summary (Continued)
Table A-14. HLLWE Run ID: 0050-END-1

Footnotes:

[1] The Total M-5 Particulate result is the sum of the acetone probe rinse particulate weight and the particulate filter particulate weight.

[2] This value is the laboratory sample result. When the analytical result is "ND" or not detected, the laboratory analysis did not detect the analyte down to the method detection limit (MDL).

[3] This value is the laboratory MDL derived according to requirements outlined in 40 CFR Part 136, Appendix B. The MDL has been calculated as Cl_2, HCl, HF, HNO_3, or HNO_2, as appropriate.

[4] The RDL is the Reliable Detection Limit. The RDL is the detection level recommended by EPA's National Research Laboratory in Cincinnati, Ohio, Environmental Monitoring Systems Laboratory (EMSL) in Cincinnati, Ohio, American Chemical Society (ACS) Committee on Environmental Improvement and the Drinking Water Standards Division (DWSD). It is defined as 2.623 times the MDL (2.623 X MDL). The RDL has been calculated as Cl_2, HCl, HF, HNO_3, or HNO_2, as appropriate.

[5] The RL is the laboratory Reporting Limit (RL). The RL has been calculated as Cl_2, HCl, HF, HNO_3, or HNO_2, as appropriate.

[6] The **bolded** value for each analyte is the value or default value assigned to the analyte. This value was determined using the following guidelines:

- When the analytical result is greater than the laboratory reporting limit (RL), the "Risk Result" is the actual analytical result or "hit" determined by the laboratory.
- When the analytical result is greater than the reliable detection level (RDL), but less than the laboratory reporting limit (RL), the "Risk Result" is the actual analytical result or "hit" determined by the laboratory.
- When the analytical result is less than the RDL, but greater than the method detection limit (MDL), the default value is the RDL.
- When the analytical result is not detected down to the MDL, the "Risk Result" is the RDL.
- It should be noted that when the RDL is selected as the default value using the guidelines above, but the RDL is greater than the RL, the RL is used as the risk result.

[7] This flag is the laboratory data flag that corresponds to EPA guidelines. The data flags for these samples are as follows:

- A "U" flag indicates that this analyte was analyzed for, but was not detected down to the MDL.

  A "B" flag indicates that the result for this analyte was below the RL and is therefore considered to be an estimated value.

[8] The calculation of the total milligrams (mg) of HCl in the Impinger Composite is as follows:

$$\text{Total mg}_{(\text{HCl})} = \text{mg of } Cl^- \times \frac{(36.46 \text{ mg HCl})}{(35.45 \text{ mg } Cl^-)}$$

Where: 36.46 = the molecular weight of HCl in mg/mg-mole and
35.45 = the atomic weight of Cl^- in mg/mg-mole.

M5 Particulate and Anion Train - Run 3
Analytical Results Summary (Continued)
Table A-14. HLLWE Run ID: 0050-END-1

[9] The calculation of the total milligrams (mg) of HF in Impinger Composite is as follows:

$$\text{Total mg}_{(HF)} = \text{mg of } F^- \times \frac{(20.01\,\text{mg HF})}{(19.00\,\text{mg } F^-)}$$

Where: 20.01 = the molecular weight of HF in mg/mg-mole and
19.00 = the atomic weight of F^- in mg/mg-mole.

[10] The calculation of the total milligrams (mg) of HNO_3 in the Impinger Composite is as follows:

$$\text{Total mg}_{(HNO_3)} = \text{mg of } NO_3^- \times \frac{(63.01\text{ mg } HNO_3)}{(62.00\text{ mg } NO_3^-)}$$

Where: 63.01 = the molecular weight of HNO_3 in mg/mg-mole and
62.00 = the molecular weight of NO_3^- in mg/mg-mole.

[11] The calculation of the total milligrams (mg) of HNO_2 in the Impinger Composite is as follows:

$$\text{Total mg}_{(HNO_2)} = \text{mg of } NO_2^- \times \frac{(47.01\text{ mg } HNO_2)}{(46.01\text{ mg } NO_2^-)}$$

Where: 47.01 = the molecular weight of HNO_2 in mg/mg-mole and
46.01 = the molecular weight of NO_2^- in mg/mg-mole.

[12] No additional calculation was required to be performed to obtain the total milligrams (mg) of Cl_2 in the NaOH Impinger Composite. Note that the NaOH Impingers were treated with NaS_2O_3 prior to the analysis of chlorine.

M5 Particulate and Anion Train - Run 2
Analytical Results Summary
Table A-15. HLLWE Run ID: 0050-STRT-2

Field Sample Name: M5 HCl/Cl_2 and Particulate Train
Sample Description: Particulate Filter and Acetone Probe Rinse Samples for Particulate Determination
Field Sample Number(s): A-3312 and A-3313
STL Sample No.: H1F210104-005 and H1F210104-006

Analyte	Particulate Filter Particulate Weight (µg)	Acetone Probe Rinse Particulate Weight (µg)	Particulate [1] Total (Total µg of Particulate)
Particulate	600	500	1,100

Field Sample Name: M5 HCl/Cl_2 and Particulate Train
Sample Description: 0.1N H_2SO_4 Impinger Solution for Chloride, Fluoride, Nitrate, and Nitrite Analysis
Field Sample Number(s): A-3314
STL Sample No.: H1F210104-007

Analyte	Laboratory Result[2] (Total mg)	MDL[3]	RDL[4]	RL[5]	Risk Result (Total mg)[6]	Flag[7]
Chloride (as HCl)[8]	1.7	1.6	4.3	**2.9**	< 2.9	B
Fluoride (as HF)[9]	ND	0.074	**0.19**	1.5	< 0.19	
Nitrate (as HNO_3)[10]	**8.4**	0.071	0.19	0.71	8.4	
Nitrite (as HNO_2)[11]	ND	0.14	**0.38**	1.4	< 0.38	

M5 Particulate and Anion Train - Run 2
Analytical Results Summary (Continued)
Table A-15. HLLWE Run ID: 0050-STRT-2

Field Sample Name: M5 HCl/Cl_2 and Particulate Train
Sample Description: 0.1N NaOH Impinger Solution for Chlorine, Fluoride, Nitrate, and Nitrite Analysis
Field Sample Number(s): A-3315
STL Sample No.: H1F210104-008

Analyte	Laboratory Result[2] (Total mg)	MDL[3]	RDL[4]	RL[5]	Risk Result (Total mg)[6]	Flag[7]
Chlorine (as Cl_2)[12]	ND	0.16	0.42	**0.28**	< 0.28	
Fluoride (as HF)[9]	ND	0.074	**0.19**	1.5	< 0.19	
Nitrate (as HNO_3)[10]	**0.22**	0.014	0.037	0.14	0.22	
Nitrite (as HNO_2)[11]	**1.2**	0.029	0.075	0.29	1.2	

Sample Collection and Analysis Dates:

	Particulate Filter	Acetone Probe Rinse	0.1N H_2SO_4 Impinger Composite	0.1N NaOH Impinger Composite
Date(s) Collected:	June 11, 2001	June 11, 2001	June 11, 2001	June 11, 2001
Date(s) of Preparation-Analysis:	June 22-26, 2001	June 25-26, 2001	June 29, 2001	July 05, 2001

Preparation and Analysis Methods:

EPA Method 5: "Particulate Emissions from Stationary Sources"
SW-846 Method 9056: "Determination of Inorganic Anions by Ion Chromatography"

M5 Particulate and Anion Train - Run 2
Analytical Results Summary (Continued)
Table A-15. HLLWE Run ID: 0050-STRT-2

Footnotes:

[1] The Total M-5 Particulate result is the sum of the acetone probe rinse particulate weight and the particulate filter particulate weight.

[2] This value is the laboratory sample result. When the analytical result is "ND" or not detected, the laboratory analysis did not detect the analyte down to the method detection limit (MDL).

[3] This value is the laboratory MDL derived according to requirements outlined in 40 CFR Part 136, Appendix B. The MDL has been calculated as Cl_2, HCl, HF, HNO_3, or HNO_2, as appropriate.

[4] The RDL is the Reliable Detection Limit. The RDL is the detection level recommended by EPA's National Research Laboratory in Cincinnati, Ohio, Environmental Monitoring Systems Laboratory (EMSL) in Cincinnati, Ohio, American Chemical Society (ACS) Committee on Environmental Improvement and the Drinking Water Standards Division (DWSD). It is defined as 2.623 times the MDL (2.623 X MDL). The RDL has been calculated as Cl_2, HCl, HF, HNO_3, or HNO_2, as appropriate.

[5] The RL is the laboratory Reporting Limit (RL). The RL has been calculated as Cl_2, HCl, HF, HNO_3, or HNO_2, as appropriate.

[6] The **bolded** value for each analyte is the value or default value assigned to the analyte. This value was determined using the following guidelines:

- When the analytical result is greater than the laboratory reporting limit (RL), the "Risk Result" is the actual analytical result or "hit" determined by the laboratory.
- When the analytical result is greater than the reliable detection level (RDL), but less than the laboratory reporting limit (RL), the "Risk Result" is the actual analytical result or "hit" determined by the laboratory.
- When the analytical result is less than the RDL, but greater than the method detection limit (MDL), the default value is the RDL.
- When the analytical result is not detected down to the MDL, the "Risk Result" is the RDL.
- It should be noted that when the RDL is selected as the default value using the guidelines above, but the RDL is greater than the RL, the RL is used as the risk result.

[7] This flag is the laboratory data flag that corresponds to EPA guidelines. The data flags for these samples are as follows:

- A "U" flag indicates that this analyte was analyzed for, but was not detected down to the MDL.

  A "B" flag indicates that the result for this analyte was below the RL and is therefore considered to be an estimated value.

[8] The calculation of the total milligrams (mg) of HCl in the Impinger Composite is as follows:

$$\text{Total mg}_{(HCl)} = \text{mg of } Cl^- \times \frac{(36.46 \text{ mg HCl})}{(35.45 \text{ mg } Cl^-)}$$

Where: 36.46 = the molecular weight of HCl in mg/mg-mole and
35.45 = the atomic weight of Cl^- in mg/mg-mole.

M5 Particulate and Anion Train - Run 2
Analytical Results Summary (Continued)
Table A-15. HLLWE Run ID: 0050-STRT-2

[9] The calculation of the total milligrams (mg) of HF in Impinger Composite is as follows:

$$\text{Total mg}_{(HF)} = \text{mg of } F^- \times \frac{(20.01\,\text{mg HF})}{(19.00\,\text{mg } F^-)}$$

Where: 20.01 = the molecular weight of HF in mg/mg-mole and
19.00 = the atomic weight of F^- in mg/mg-mole.

[10] The calculation of the total milligrams (mg) of HNO_3 in the Impinger Composite is as follows:

$$\text{Total mg}_{(HNO_3)} = \text{mg of } NO_3^- \times \frac{(63.01\text{ mg } HNO_3)}{(62.00\text{ mg } NO_3^-)}$$

Where: 63.01 = the molecular weight of HNO_3 in mg/mg-mole and
62.00 = the molecular weight of NO_3^- in mg/mg-mole.

[11] The calculation of the total milligrams (mg) of HNO_2 in the Impinger Composite is as follows:

$$\text{Total mg}_{(HNO_2)} = \text{mg of } NO_2^- \times \frac{(47.01\text{ mg } HNO_2)}{(46.01\text{ mg } NO_2^-)}$$

Where: 47.01 = the molecular weight of HNO_2 in mg/mg-mole and
46.01 = the molecular weight of NO_2^- in mg/mg-mole.

[12] No additional calculation was required to be performed to obtain the total milligrams (mg) of Cl_2 in the NaOH Impinger Composite. Note that the NaOH Impingers were treated with NaS_2O_3 prior to the analysis of chlorine.

M5 Particulate and Anion Train - Run 4
Analytical Results Summary
Table A-16. HLLWE Run ID: 0050-END-2

Field Sample Name: M5 HCl/Cl_2 and Particulate Train
Sample Description: Particulate Filter and Acetone Probe Rinse Samples for Particulate Determination
Field Sample Number(s): A-3342 and A-3343
STL Sample No.: H1F210104-022 and H1F210104-023

Analyte	Particulate Filter Particulate Weight (µg)	Acetone Probe Rinse Particulate Weight (µg)	Particulate [1] Total (Total µg of Particulate)
Particulate	700	100 B	800 B

Field Sample Name: M5 HCl/Cl_2 and Particulate Train
Sample Description: 0.1N H_2SO_4 Impinger Solution for Chloride, Fluoride, Nitrate, and Nitrite Analysis
Field Sample Number(s): A-3344
STL Sample No.: H1F210104-024

Analyte	Laboratory Result[2] (Total mg)	MDL[3]	RDL[4]	RL[5]	Risk Result (Total mg)[6]	Flag[7]
Chloride (as HCl)[8]	1.8	1.6	4.3	**2.9**	< 2.9	B
Fluoride (as HF)[9]	ND	0.074	**0.19**	1.5	< 0.19	
Nitrate (as HNO_3)[10]	**6.6**	0.071	0.19	0.71	6.6	
Nitrite (as HNO_2)[11]	ND	0.14	**0.38**	1.4	< 0.38	

M5 Particulate and Anion Train - Run 4
Analytical Results Summary (Continued)
Table A-16. HLLWE Run ID: 0050-END-2

Field Sample Name: M5 HCl/Cl_2 and Particulate Train
Sample Description: 0.1N NaOH Impinger Solution for Chlorine, Fluoride, Nitrate, and Nitrite Analysis
Field Sample Number(s): A-3345
STL Sample No.: H1F210104-025

Analyte	Laboratory Result[2] (Total mg)	MDL[3]	RDL[4]	RL[5]	Risk Result (Total mg)[6]	Flag[7]
Chlorine (as Cl_2)[12]	ND	0.16	0.42	**0.29**	< 0.29	
Fluoride (as HF)[9]	ND	0.075	**0.20**	1.5	< 0.20	
Nitrate (as HNO_3)[10]	**0.51**	0.014	0.038	0.14	0.51	
Nitrite (as HNO_2)[11]	**2.7**	0.015	0.038	0.15	2.7	

Sample Collection and Analysis Dates:

	Particulate Filter	Acetone Probe Rinse	0.1N H_2SO_4 Impinger Composite	0.1N NaOH Impinger Composite
Date(s) Collected:	June 11, 2001	June 11, 2001	June 11, 2001	June 11, 2001
Date(s) of Preparation-Analysis:	June 22-26, 2001	June 25-26, 2001	June 29, 2001	July 05, 2001

Preparation and Analysis Methods:

EPA Method 5: "Particulate Emissions from Stationary Sources"
SW-846 Method 9056: "Determination of Inorganic Anions by Ion Chromatography"

M5 Particulate and Anion Train - Run 4
Analytical Results Summary (Continued)
Table A-16. HLLWE Run ID: 0050-END-2

Footnotes:

[1] The Total M-5 Particulate result is the sum of the acetone probe rinse particulate weight and the particulate filter particulate weight.

[2] This value is the laboratory sample result. When the analytical result is "ND" or not detected, the laboratory analysis did not detect the analyte down to the method detection limit (MDL).

[3] This value is the laboratory MDL derived according to requirements outlined in 40 CFR Part 136, Appendix B. The MDL has been calculated as Cl_2, HCl, HF, HNO_3, or HNO_2, as appropriate.

[4] The RDL is the Reliable Detection Limit. The RDL is the detection level recommended by EPA's National Research Laboratory in Cincinnati, Ohio, Environmental Monitoring Systems Laboratory (EMSL) in Cincinnati, Ohio, American Chemical Society (ACS) Committee on Environmental Improvement and the Drinking Water Standards Division (DWSD). It is defined as 2.623 times the MDL (2.623 X MDL). The RDL has been calculated as Cl_2, HCl, HF, HNO_3, or HNO_2, as appropriate.

[5] The RL is the laboratory Reporting Limit (RL). The RL has been calculated as Cl_2, HCl, HF, HNO_3, or HNO_2, as appropriate.

[6] The **bolded** value for each analyte is the value or default value assigned to the analyte. This value was determined using the following guidelines:

- When the analytical result is greater than the laboratory reporting limit (RL), the "Risk Result" is the actual analytical result or "hit" determined by the laboratory.
- When the analytical result is greater than the reliable detection level (RDL), but less than the laboratory reporting limit (RL), the "Risk Result" is the actual analytical result or "hit" determined by the laboratory.
- When the analytical result is less than the RDL, but greater than the method detection limit (MDL), the default value is the RDL.
- When the analytical result is not detected down to the MDL, the "Risk Result" is the RDL.
- It should be noted that when the RDL is selected as the default value using the guidelines above, but the RDL is greater than the RL, the RL is used as the risk result.

[7] This flag is the laboratory data flag that corresponds to EPA guidelines. The data flags for these samples are as follows:

- A "U" flag indicates that this analyte was analyzed for, but was not detected down to the MDL.

  A "B" flag indicates that the result for this analyte was below the RL and is therefore considered to be an estimated value.

[8] The calculation of the total milligrams (mg) of HCl in the Impinger Composite is as follows:

$$\text{Total mg}_{(HCl)} = \text{mg of } Cl^- \times \frac{(36.46 \text{ mg HCl})}{(35.45 \text{ mg } Cl^-)}$$

Where: 36.46 = the molecular weight of HCl in mg/mg-mole and
35.45 = the atomic weight of Cl^- in mg/mg-mole.

M5 Particulate and Anion Train - Run 4
Analytical Results Summary (Continued)
Table A-16. HLLWE Run ID: 0050-END-2

[9] The calculation of the total milligrams (mg) of HF in Impinger Composite is as follows:

$$\text{Total mg}_{(HF)} = \text{mg of } F^- \times \frac{(20.01\,\text{mg HF})}{(19.00\,\text{mg } F^-)}$$

Where: 20.01 = the molecular weight of HF in mg/mg-mole and
19.00 = the atomic weight of F^- in mg/mg-mole.

[10] The calculation of the total milligrams (mg) of HNO_3 in the Impinger Composite is as follows:

$$\text{Total mg}_{(HNO_3)} = \text{mg of } NO_3^- \times \frac{(63.01\text{ mg } HNO_3)}{(62.00\text{ mg } NO_3^-)}$$

Where: 63.01 = the molecular weight of HNO_3 in mg/mg-mole and
62.00 = the molecular weight of NO_3^- in mg/mg-mole.

[11] The calculation of the total milligrams (mg) of HNO_2 in the Impinger Composite is as follows:

$$\text{Total mg}_{(HNO_2)} = \text{mg of } NO_2^- \times \frac{(47.01\text{ mg } HNO_2)}{(46.01\text{ mg } NO_2^-)}$$

Where: 47.01 = the molecular weight of HNO_2 in mg/mg-mole and
46.01 = the molecular weight of NO_2^- in mg/mg-mole.

[12] No additional calculation was required to be performed to obtain the total milligrams (mg) of Cl_2 in the NaOH Impinger Composite. Note that the NaOH Impingers were treated with NaS_2O_3 prior to the analysis of chlorine.

Table A-17. M5 Particulate and Anion Train - Run 2 Reagent Blanks Analytical Results Summary

Field Sample Name: M5 HCl/Cl_2 and Particulate Train Reagent Blanks
Sample Description: Particulate Filter and Acetone Probe Rinse Reagent Blanks for Particulate Determination
Field Sample Number(s): A-3316 and A-3317
STL Sample No.: H1F210104-009 and H1F210104-010

Analyte	Particulate Filter Particulate Weight (µg)	Acetone Probe Rinse Particulate Weight (µg)	Particulate [1] Total (Total µg of Particulate)
Particulate	500 U	500 U	1,000 U

Field Sample Name: M5 HCl/Cl_2 and Particulate Train Reagent Blanks
Sample Description: 0.1N H_2SO_4 Impinger Solution Reagent Blanks for Chloride, Fluoride, Nitrate, and Nitrite Analysis
Field Sample Number(s): A-3318
STL Sample No.: H1F210104-011

Analyte	Laboratory Result[2] (Total mg)	MDL[3]	RDL[4]	RL[5]	Risk Result (Total mg)[6]	Flag[7]
Chloride (as HCl)[8]	1.6	1.2	3.0	**2.0**	< 2.0	B
Fluoride (as HF)[9]	ND	0.052	**0.14**	1.0	< 0.14	
Nitrate (as HNO_3)[10]	ND	0.020	**0.053**	0.20	< 0.053	
Nitrite (as HNO_2)[11]	ND	0.10	**0.27**	1.0	< 0.27	

Table A-17. M5 Particulate and Anion Train - Run 2 Reagent Blanks Analytical Results Summary (Continued)

Field Sample Name: M5 HCl/Cl_2 and Particulate Train Reagent Blanks
Sample Description: 0.1N NaOH Impinger Solution Reagent Blanks for Chlorine, Fluoride, Nitrate, and Nitrite Analysis
Field Sample Number(s): A-3319
STL Sample No.: H1F210104-012

Analyte	Laboratory Result[2] (Total mg)	MDL[3]	RDL[4]	RL[5]	Risk Result (Total mg)[6]	Flag[7]
Chlorine (as Cl_2)[12]	ND	0.11	0.30	**0.20**	< 0.20	
Fluoride (as HF)[9]	ND	0.11	**0.28**	2.1	< 0.28	
Nitrate (as HNO_3)[10]	0.012	0.010	**0.027**	0.10	< 0.027	B
Nitrite (as HNO_2)[11]	ND	0.010	**0.027**	0.10	< 0.027	

Sample Collection and Analysis Dates:

	Particulate Filter	Acetone Probe Rinse	0.1N H_2SO_4 Impinger Composite	0.1N NaOH Impinger Composite
Date(s) Collected:	June 11, 2001	June 11, 2001	June 11, 2001	June 11, 2001
Date(s) of Preparation-Analysis:	June 22-26, 2001	June 25-26, 2001	June 29, 2001	July 05, 2001

Preparation and Analysis Methods:

EPA Method 5: "Particulate Emissions from Stationary Sources"
SW-846 Method 9056: "Determination of Inorganic Anions by Ion Chromatography"

Table A-17. M5 Particulate and Anion Train - Run 2 Reagent Blanks Analytical Results Summary (Continued)

Footnotes:

[1] The Total M-5 Particulate result is the sum of the acetone probe rinse particulate weight and the particulate filter particulate weight.

[2] This value is the laboratory sample result. When the analytical result is "ND" or not detected, the laboratory analysis did not detect the analyte down to the method detection limit (MDL).

[3] This value is the laboratory MDL derived according to requirements outlined in 40 CFR Part 136, Appendix B. The MDL has been calculated as Cl_2, HCl, HF, HNO_3, or HNO_2, as appropriate.

[4] The RDL is the Reliable Detection Limit. The RDL is the detection level recommended by EPA's National Research Laboratory in Cincinnati, Ohio, Environmental Monitoring Systems Laboratory (EMSL) in Cincinnati, Ohio, American Chemical Society (ACS) Committee on Environmental Improvement and the Drinking Water Standards Division (DWSD). It is defined as 2.623 times the MDL (2.623 X MDL). The RDL has been calculated as Cl_2, HCl, HF, HNO_3, or HNO_2, as appropriate.

[5] The RL is the laboratory Reporting Limit (RL). The RL has been calculated as Cl_2, HCl, HF, HNO_3, or HNO_2, as appropriate.

[6] The **bolded** value for each analyte is the value or default value assigned to the analyte. This value was determined using the following guidelines:

- When the analytical result is greater than the laboratory reporting limit (RL), the "Risk Result" is the actual analytical result or "hit" determined by the laboratory.
- When the analytical result is greater than the reliable detection level (RDL), but less than the laboratory reporting limit (RL), the "Risk Result" is the actual analytical result or "hit" determined by the laboratory.
- When the analytical result is less than the RDL, but greater than the method detection limit (MDL), the default value is the RDL.
- When the analytical result is not detected down to the MDL, the "Risk Result" is the RDL.
- It should be noted that when the RDL is selected as the default value using the guidelines above, but the RDL is greater than the RL, the RL is used as the risk result.

[7] This flag is the laboratory data flag that corresponds to EPA guidelines. The data flags for these samples are as follows:

- A "U" flag indicates that this analyte was analyzed for, but was not detected down to the MDL.

  A "B" flag indicates that the result for this analyte was below the RL and is therefore considered to be an estimated value.

[8] The calculation of the total milligrams (mg) of HCl in the Impinger Composite is as follows:

$$\text{Total mg}_{(HCl)} = \text{mg of } Cl^- \times \frac{(36.46 \text{ mg HCl})}{(35.45 \text{ mg } Cl^-)}$$

Where: 36.46 = the molecular weight of HCl in mg/mg-mole and
35.45 = the atomic weight of Cl^- in mg/mg-mole.

Table A-17. M5 Particulate and Anion Train - Run 2 Reagent Blanks Analytical Results Summary (Continued)

[9] The calculation of the total milligrams (mg) of HF in Impinger Composite is as follows:

$$\text{Total mg}_{(HF)} = \text{mg of } F^- \times \frac{(20.01\,\text{mg HF})}{(19.00\,\text{mg } F^-)}$$

Where: 20.01 = the molecular weight of HF in mg/mg-mole and
19.00 = the atomic weight of F^- in mg/mg-mole.

[10] The calculation of the total milligrams (mg) of HNO_3 in the Impinger Composite is as follows:

$$\text{Total mg}_{(HNO_3)} = \text{mg of } NO_3^- \times \frac{(63.01\text{ mg } HNO_3)}{(62.00\text{ mg } NO_3^-)}$$

Where: 63.01 = the molecular weight of HNO_3 in mg/mg-mole and
62.00 = the molecular weight of NO_3^- in mg/mg-mole.

[11] The calculation of the total milligrams (mg) of HNO_2 in the Impinger Composite is as follows:

$$\text{Total mg}_{(HNO_2)} = \text{mg of } NO_2^- \times \frac{(47.01\text{ mg } HNO_2)}{(46.01\text{ mg } NO_2^-)}$$

Where: 47.01 = the molecular weight of HNO_2 in mg/mg-mole and
46.01 = the molecular weight of NO_2^- in mg/mg-mole.

[12] No additional calculation was required to be performed to obtain the total milligrams (mg) of Cl_2 in the NaOH Impinger Composite. Note that the NaOH Impingers were treated with NaS_2O_3 prior to the analysis of chlorine.

Table A-18. M5 Particulate and Anion Train Run 2 INTEC Deionized Water Reagent Blank Analytical Results Summary

Field Sample Name: M5 HCl/Cl_2 and Particulate Train INTEC D.I. Water Reagent Blank
Sample Description: INTEC D.I. Water Reagent Blank for Chloride, Fluoride, Nitrate, and Nitrite Analysis
Field Sample Number(s): A-3349
STL Sample No.: H1F210104-013

Analyte	Laboratory Result[1] (Total mg)	MDL[2]	RDL[3]	RL[4]	Risk Result (Total mg)[5]	Flag[6]
Chloride (as HCl)[7]	ND	0.060	0.16	**0.10**	< 0.10	
Fluoride (as HF)[8]	ND	0.0054	**0.014**	0.11	< 0.014	
Nitrate (as HNO_3)[9]	0.0058	0.0052	**0.014**	0.052	< 0.014	B
Nitrite (as HNO_2)[10]	ND	0.01	**0.014**	0.052	< 0.014	

Sample Collection and Analysis Dates:

Date(s) Collected:	June 11, 2001
Date(s) of Preparation-Analysis:	June 29, 2001

Preparation and Analysis Methods:

EPA Method 5: "Particulate Emissions from Stationary Sources"
SW-846 Method 9056: "Determination of Inorganic Anions by Ion Chromatography"

Table A-18. M5 Particulate and Anion Train Run 2 INTEC Deionized Water Reagent Blank Analytical Results Summary (Continued)

Footnotes:

[1] This value is the laboratory sample result. When the analytical result is "ND" or not detected, the laboratory analysis did not detect the analyte down to the method detection limit (MDL).

[2] This value is the laboratory MDL derived according to requirements outlined in 40 CFR Part 136, Appendix B. The MDL has been calculated as Cl_2, HCl, HF, HNO_3, or HNO_2, as appropriate.

[3] The RDL is the Reliable Detection Limit. The RDL is the detection level recommended by EPA's National Research Laboratory in Cincinnati, Ohio, Environmental Monitoring Systems Laboratory (EMSL) in Cincinnati, Ohio, American Chemical Society (ACS) Committee on Environmental Improvement and the Drinking Water Standards Division (DWSD). It is defined as 2.623 times the MDL (2.623 X MDL). The RDL has been calculated as Cl_2, HCl, HF, HNO_3, or HNO_2, as appropriate.

[4] The RL is the laboratory Reporting Limit (RL). The RL has been calculated as Cl_2, HCl, HF, HNO_3, or HNO_2, as appropriate.

[5] The **bolded** value for each analyte is the value or default value assigned to the analyte. This value was determined using the following guidelines:

- When the analytical result is greater than the laboratory reporting limit (RL), the "Risk Result" is the actual analytical result or "hit" determined by the laboratory.
- When the analytical result is greater than the reliable detection level (RDL), but less than the laboratory reporting limit (RL), the "Risk Result" is the actual analytical result or "hit" determined by the laboratory.
- When the analytical result is less than the RDL, but greater than the method detection limit (MDL), the default value is the RDL.
- When the analytical result is not detected down to the MDL, the "Risk Result" is the RDL.
- It should be noted that when the RDL is selected as the default value using the guidelines above, but the RDL is greater than the RL, the RL is used as the risk result.

[6] This flag is the laboratory data flag that corresponds to EPA guidelines. The data flags for these samples are as follows:

- A "U" flag indicates that this analyte was analyzed for, but was not detected down to the MDL.

  A "B" flag indicates that the result for this analyte was below the RL and is therefore considered to be an estimated value.

[7] The calculation of the total milligrams (mg) of HCl in the Impinger Composite is as follows:

$$\text{Total mg}_{(HCl)} = \text{mg of } Cl^- \times \frac{(36.46 \text{ mg HCl})}{(35.45 \text{ mg } Cl^-)}$$

Where: 36.46 = the molecular weight of HCl in mg/mg-mole and
35.45 = the atomic weight of Cl^- in mg/mg-mole.

Table A-18. M5 Particulate and Anion Train Run 2 INTEC Deionized Water Reagent Blank Analytical Results Summary (Continued)

[8] The calculation of the total milligrams (mg) of HF in Impinger Composite is as follows:

$$\text{Total mg}_{(HF)} = \text{mg of } F^- \times \frac{(20.01\,\text{mg HF})}{(19.00\,\text{mg } F^-)}$$

Where: 20.01 = the molecular weight of HF in mg/mg-mole and
19.00 = the atomic weight of F^- in mg/mg-mole.

[9] The calculation of the total milligrams (mg) of HNO_3 in the Impinger Composite is as follows:

$$\text{Total mg}_{(HNO_3)} = \text{mg of } NO_3^- \times \frac{(63.01\text{ mg } HNO_3)}{(62.00\text{ mg } NO_3^-)}$$

Where: 63.01 = the molecular weight of HNO_3 in mg/mg-mole and
62.00 = the molecular weight of NO_3^- in mg/mg-mole.

[10] The calculation of the total milligrams (mg) of HNO_2 in the Impinger Composite is as follows:

$$\text{Total mg}_{(HNO_2)} = \text{mg of } NO_2^- \times \frac{(47.01\text{ mg } HNO_2)}{(46.01\text{ mg } NO_2^-)}$$

Where: 47.01 = the molecular weight of HNO_2 in mg/mg-mole and
46.01 = the molecular weight of NO_2^- in mg/mg-mole.

Table A-19. M5 Particulate and Anion Train Final Acetone Probe Rinse Analytical Results Summary

Field Sample Name: M5 HCl/Cl_2 and Particulate Train Final Acetone Probe Rinse
Sample Description: Final Acetone Probe Rinse for Particulate Determination
Field Sample Number(s): A-3346
STL Sample No.: H1G030222-001

Analyte	Final Acetone Probe Rinse Particulate Weight (µg) [1]
Particulate	6,200

Sample Collection and Analysis Dates:	Final Acetone Probe Rinse
Date(s) Collected:	June 25, 2001
Date(s) of Preparation-Analysis:	July 03-06, 2001

Preparation and Analysis Methods:

EPA Method 5: "Particulate Emissions from Stationary Sources"
SW-846 Method 9056: "Determination of Inorganic Anions by Ion Chromatography"

Footnotes:

[1] This flag is the laboratory data flag that corresponds to EPA guidelines. The data flags for these samples are as follows:

- A "U" flag indicates that this analyte was analyzed for, but was not detected down to the MDL.

  A "B" flag indicates that the result for this analyte was below the RL and is therefore considered to be an estimated value.

Method 0060 Multi-Metals Train (MMT) Train Total Summary - Run 1 Train Totals
Metallic Analyte Analytical Results Summary
Table A-20. HLLWE Run ID: 0060-STRT-1

Field Sample Name: Method 0060 Multi-Metals Train (MMT)
Sample Description: Method 0060 Multi-Metals Train (MMT) Totals for Metals Analysis

Analyte	CAS Registry Number	MMT Front Half Composite[1] (µg)		MMT Back Half Composite[2] (µg)		MMT Sampling Train Totals[3] (Total µg)		*Project Specific Flag*[6]
		Risk Result	Flag[4]	Risk Result	Flag[4]	Total[5]	Flag	
Aluminum (Al)	7429-90-5	95		42		140		A
Antimony (Sb)	7440-36-0	2.9	B	1.7	B	< 4.6	B	A
Arsenic (As)	7440-38-2	0.92	U	0.66	B	< 1.6	B	P
Barium (Ba)	7440-39-3	4.8	B	1.9	B	6.7	B	A
Beryllium (Be)	7440-41-7	0.23	B	0.42	U	< 0.65	B	P
Cadmium (Cd)	7440-43-9	0.32	B	0.14	B	< 0.46	B	A
Chromium (Cr)	7440-47-3	1.7		1.3		3.0		A
Cobalt (Co)	7440-48-4	1.3	B	1.4	B	< 2.7	B	A
Copper (Cu)	7440-50-8	0.94	B	3.4		4.3	B	A
Lead (Pb)	7439-92-1	0.52	U	0.78	B	< 1.3	B	P
Manganese (Mn)	7439-96-5	2.8		16		19		A
Mercury (Hg)	7439-97-6	0.37	B	100		100		A
Nickel (Ni)	7440-02-0	3.8	B	1.2	B	< 5.0	B	A
Selenium (Se)	7782-49-2	2.4		0.78	B	3.2	B	A
Silver (Ag)	7440-22-4	1.9	U	0.71	U	< 2.6		N
Thallium (Tl)	7440-28-0	1.0	U	1.5	U	< 2.5		N
Vanadium (V)	7440-62-2	1.3	U	1.4	U	< 2.7		N
Zinc (Zn)	7440-66-6	18		43		61		A

Footnotes:

[1] The MMT Front Half Composite consists of the Quartz Fiber Particulate Filter and the 0.1 N Nitric Acid Probe Rinse Solution.

[2] The MMT Back Half configuration includes seven (7) impingers. The first impinger remains empty prior to sampling and serves as a moisture knockout impinger. The second and third impingers are charged with 5% HNO_3/10% H_2O_2 and are analyzed with the first impinger contents for all of the metallic analytes including mercury. The fourth impinger is left empty and serves to protect the mercury trapping solution from carryover. Its contents and glassware rinses are analyzed separately for mercury, only. The fifth and sixth impingers contain 4% $KMnO_4$/10% H_2SO_4 and are also analyzed for mercury, only. The seventh impinger contains silica gel for a final scrubbing of residual moisture. The MMT back half mercury (Hg) result is the sum of the mercury in the 5% HNO_3/10% H_2O_2 fraction, the fourth empty impinger fraction, the 4% $KMnO_4$/10% H_2SO_4 fraction, and the 8N HCl impinger rinse fraction. The total micrograms (ug) of mercury in these fractions is included in the MMT back half result.

[3] The total mass for each metal found in the MMT sampling train consists of the sum of the MMT train's Front Half metals content plus the train's Back Half metals content. The calculation is as follows:

(Total μg in the Front Half) + (Total μg in the Back Half) = Total μg in the Multi-Metals Sampling Train.
Therefore: (μg) + (μg) = Total μg

The MMT Sampling Train Total value was obtained by summing the MMT Front Half results and the MMT Back Half results using the following guidelines:

- When the train component analytical result is greater than the laboratory reporting limit (RL), the result included in the train total is the actual analytical result or "hit" determined by the laboratory.
- When the train component analytical result is greater than the reliable detection level (RDL), but less than the laboratory reporting limit (RL), the result included in the train total is actual analytical result or "hit" determined by the laboratory and the corresponding "B" flag is carried through the calculation to the train total.
- When the train analytical component result is less than the RDL, but greater than the method detection limit (MDL), the result included in the train total is the RDL and the corresponding "B" flag is carried through the calculation to the train total.
- When the train component analytical result is not detected down to the MDL, the result included in the train total is the RDL and the corresponding "U" flag is carried through the calculation to the train total.
- It should be noted that when the RDL is selected as the default value using the guidelines above, but the RDL is greater than the RL, the RL is included in the train total.

The data flags attached to the MMT Totals are the cumulative set of flags for each train component included as part of the MMT total. A flag attached to a MMT component is carried through to the "MMT Sampling Train Total" column when the associated component analytical result is a significant number in comparison to the MMT Total. That is, if the MMT Total is affected by a MMT component analytical result, the associated flag is carried to the MMT Train Total, but if the MMT Train Total is not affected by a MMT component, the associated flag is not carried through to the MMT Train Total. The combinations of train fractions are conducted following the standard practice of using significant figures found in ASTM E29-93a(1999), "Standard Practice for Using Significant Digits in Test Data to Determine Conformance with Specifications" and Severn Trent Laboratories standard operating procedure number QA-004, "Rounding and Significant Figures".

[4] This flag is the laboratory data flag that corresponds to EPA guidelines. The data flags for these samples are as follows:

- A "U" qualifier indicates that this analyte was analyzed for, but was not detected down to the MDL.
- A "B" flag indicates that this analyte was detected, but at a concentration below the laboratory RL. The analytical result is therefore an estimated value.

[5] When listed, the less than (<) sign indicates that at least one sample fraction result is either a "non-detect" value down to the MDL of the measurement that carries, or an estimated "hit" value that is below the RDL. In either case, the final value for the fraction that is included in the data set total is the default RDL value and the actual value of the total is known to be less than (<) the displayed result.

[6] Entries in this column are project-specific train total flags that are applied to the run total values and are not standard EPA data flags. These project-specific flags are utilized for the INEEL NWCF HLLWE Effluent Gas Emissions Inventory project and are defined as follows:

- An "N" flag in this column indicates that the compound was not measured (detected) in any of the sampling train components, or fractions.
- A "P" flag in this column indicates that the compound was measured (detected) in one or more of the train components, or fractions, but not in all of the sampling train fractions.
- An "A" flag in this column indicates that the compound was measured (detected) in all of the sampling train components, or fractions.

Method 0060 Multi-Metals Train (MMT) Train Total Summary - Run 3 Train Totals
Metallic Analyte Analytical Results Summary
Table A-21. HLLWE Run ID: 0060-END-1

Field Sample Name: Method 0060 Multi-Metals Train (MMT)
Sample Description: Method 0060 Multi-Metals Train (MMT) Totals for Metals Analysis

Analyte	CAS Registry Number	MMT Front Half Composite[1] (µg)		MMT Back Half Composite[2] (µg)		MMT Sampling Train Totals[3] (Total µg)		*Project Specific Flag*[6]
		Risk Result	Flag[4]	Risk Result	Flag[4]	Total[5]	Flag	
Aluminum (Al)	7429-90-5	230		38		270		A
Antimony (Sb)	7440-36-0	3.4	B	1.7	B	< 5.1	B	A
Arsenic (As)	7440-38-2	0.92	U	0.66	U	< 1.6		N
Barium (Ba)	7440-39-3	8.5	B	1.6	B	10	B	A
Beryllium (Be)	7440-41-7	0.23	U	0.42	B	< 0.65	B	P
Cadmium (Cd)	7440-43-9	0.68		0.14	B	< 0.82	B	A
Chromium (Cr)	7440-47-3	3.4		1.3		4.7		A
Cobalt (Co)	7440-48-4	1.3	U	1.4	U	< 2.7		N
Copper (Cu)	7440-50-8	2.2	B	1.4	B	3.6	B	A
Lead (Pb)	7439-92-1	0.52	B	0.78	B	< 1.3	B	A
Manganese (Mn)	7439-96-5	5.4		18		23		A
Mercury (Hg)	7439-97-6	0.37	B	150		150		A
Nickel (Ni)	7440-02-0	4.9		1.1	B	< 6.0	B	A
Selenium (Se)	7782-49-2	1.5		0.63	U	< 2.1		P
Silver (Ag)	7440-22-4	1.9	U	0.71	U	< 2.6		N
Thallium (Tl)	7440-28-0	1.0	U	1.4	U	< 2.4		N
Vanadium (V)	7440-62-2	1.3	U	1.4	U	< 2.7		N
Zinc (Zn)	7440-66-6	89		30		120		A

Footnotes:

[1] The MMT Front Half Composite consists of the Quartz Fiber Particulate Filter and the 0.1 N Nitric Acid Probe Rinse Solution.

[2] The MMT Back Half configuration includes seven (7) impingers. The first impinger remains empty prior to sampling and serves as a moisture knockout impinger. The second and third impingers are charged with 5% HNO_3/10% H_2O_2 and are analyzed with the first impinger contents for all of the metallic analytes including mercury. The fourth impinger is left empty and serves to protect the mercury trapping solution from carryover. Its contents and glassware rinses are analyzed separately for mercury, only. The fifth and sixth impingers contain 4% $KMnO_4$/10% H_2SO_4 and are also analyzed for mercury, only. The seventh impinger contains silica gel for a final scrubbing of residual moisture. The MMT back half mercury (Hg) result is the sum of the mercury in the 5% HNO_3/10% H_2O_2 fraction, the fourth empty impinger fraction, the 4% $KMnO_4$/10% H_2SO_4 fraction, and the 8N HCl impinger rinse fraction. The total micrograms (ug) of mercury in these fractions is included in the MMT back half result.

[3] The total mass for each metal found in the MMT sampling train consists of the sum of the MMT train's Front Half metals content plus the train's Back Half metals content. The calculation is as follows:

(Total μg in the Front Half) + (Total μg in the Back Half) = Total μg in the Multi-Metals Sampling Train.
Therefore: (μg) + (μg) = Total μg

The MMT Sampling Train Total value was obtained by summing the MMT Front Half results and the MMT Back Half results using the following guidelines:

- When the train component analytical result is greater than the laboratory reporting limit (RL), the result included in the train total is the actual analytical result or "hit" determined by the laboratory.
- When the train component analytical result is greater than the reliable detection level (RDL), but less than the laboratory reporting limit (RL), the result included in the train total is actual analytical result or "hit" determined by the laboratory and the corresponding "B" flag is carried through the calculation to the train total.
- When the train analytical component result is less than the RDL, but greater than the method detection limit (MDL), the result included in the train total is the RDL and the corresponding "B" flag is carried through the calculation to the train total.
- When the train component analytical result is not detected down to the MDL, the result included in the train total is the RDL and the corresponding "U" flag is carried through the calculation to the train total.
- It should be noted that when the RDL is selected as the default value using the guidelines above, but the RDL is greater than the RL, the RL is included in the train total.

The data flags attached to the MMT Totals are the cumulative set of flags for each train component included as part of the MMT total. A flag attached to a MMT component is carried through to the "MMT Sampling Train Total" column when the associated component analytical result is a significant number in comparison to the MMT Total. That is, if the MMT Total is affected by a MMT component analytical result, the associated flag is carried to the MMT Train Total, but if the MMT Train Total is not affected by a MMT component, the associated flag is not carried through to the MMT Train Total. The combinations of train fractions are conducted following the standard practice of using significant figures found in ASTM E29-93a(1999), "Standard Practice for Using Significant Digits in Test Data to Determine Conformance with Specifications" and Severn Trent Laboratories standard operating procedure number QA-004, "Rounding and Significant Figures".

[4] This flag is the laboratory data flag that corresponds to EPA guidelines. The data flags for these samples are as follows:

- A "U" qualifier indicates that this analyte was analyzed for, but was not detected down to the MDL.

- A "B" flag indicates that this analyte was detected, but at a concentration below the laboratory RL. The analytical result is therefore an estimated value.

[5] When listed, the less than (<) sign indicates that at least one sample fraction result is either a "non-detect" value down to the MDL of the measurement that carries, or an estimated "hit" value that is below the RDL. In either case, the final value for the fraction that is included in the data set total is the default RDL value and the actual value of the total is known to be less than (<) the displayed result.

[6] Entries in this column are project-specific train total flags that are applied to the run total values and are not standard EPA data flags. These project-specific flags are utilized for the INEEL NWCF HLLWE Effluent Gas Emissions Inventory project and are defined as follows:

- An "N" flag in this column indicates that the compound was not measured (detected) in any of the sampling train components, or fractions.
- A "P" flag in this column indicates that the compound was measured (detected) in one or more of the train components, or fractions, but not in all of the sampling train fractions.
- An "A" flag in this column indicates that the compound was measured (detected) in all of the sampling train components, or fractions.

Method 0060 Multi-Metals Train (MMT) Train Total Summary - Run 2 Train Totals
Metallic Analyte Analytical Results Summary
Table A-22. HLLWE Run ID: 0060-STRT-2

Field Sample Name: Method 0060 Multi-Metals Train (MMT)
Sample Description: Method 0060 Multi-Metals Train (MMT) Totals for Metals Analysis

Analyte	CAS Registry Number	MMT Front Half Composite[1] (µg)		MMT Back Half Composite[2] (µg)		MMT Sampling Train Totals[3] (Total µg)		*Project Specific Flag*[6]
		Risk Result	Flag[4]	Risk Result	Flag[4]	Total[5]	Flag	
Aluminum (Al)	7429-90-5	42		34		76		A
Antimony (Sb)	7440-36-0	2.8	B	1.7	B	< 4.5	B	A
Arsenic (As)	7440-38-2	0.92	U	0.66	U	< 1.6		N
Barium (Ba)	7440-39-3	3.5	B	1.6	B	5.1	B	A
Beryllium (Be)	7440-41-7	0.23	B	0.42	U	< 0.65	B	P
Cadmium (Cd)	7440-43-9	0.13	U	0.14	B	< 0.27	B	P
Chromium (Cr)	7440-47-3	1.3		1.2		2.5		A
Cobalt (Co)	7440-48-4	1.3	U	1.4	U	< 2.7		N
Copper (Cu)	7440-50-8	0.66	B	1.6	B	< 2.3	B	A
Lead (Pb)	7439-92-1	0.52	U	0.89	B	< 1.4	B	P
Manganese (Mn)	7439-96-5	16		22		38		A
Mercury (Hg)	7439-97-6	0.37	B	110		110		A
Nickel (Ni)	7440-02-0	3.3	B	1.2	B	< 4.5	B	A
Selenium (Se)	7782-49-2	2.0		0.63	B	< 2.6	B	A
Silver (Ag)	7440-22-4	1.9	U	0.71	U	< 2.6		N
Thallium (Tl)	7440-28-0	1.0	U	1.5	U	< 2.5		N
Vanadium (V)	7440-62-2	1.3	U	1.4	U	< 2.7		N
Zinc (Zn)	7440-66-6	10		20		30		A

Footnotes:

[1] The MMT Front Half Composite consists of the Quartz Fiber Particulate Filter and the 0.1 N Nitric Acid Probe Rinse Solution.

[2] The MMT Back Half configuration includes seven (7) impingers. The first impinger remains empty prior to sampling and serves as a moisture knockout impinger. The second and third impingers are charged with 5% HNO_3/10% H_2O_2 and are analyzed with the first impinger contents for all of the metallic analytes including mercury. The fourth impinger is left empty and serves to protect the mercury trapping solution from carryover. Its contents and glassware rinses are analyzed separately for mercury, only. The fifth and sixth impingers contain 4% $KMnO_4$/10% H_2SO_4 and are also analyzed for mercury, only. The seventh impinger contains silica gel for a final scrubbing of residual moisture. The MMT back half mercury (Hg) result is the sum of the mercury in the 5% HNO_3/10% H_2O_2 fraction, the fourth empty impinger fraction, the 4% $KMnO_4$/10% H_2SO_4 fraction, and the 8N HCl impinger rinse fraction. The total micrograms (ug) of mercury in these fractions is included in the MMT back half result.

[3] The total mass for each metal found in the MMT sampling train consists of the sum of the MMT train's Front Half metals content plus the train's Back Half metals content. The calculation is as follows:

(Total μg in the Front Half) + (Total μg in the Back Half) = Total μg in the Multi-Metals Sampling Train.
Therefore: (μg) + (μg) = Total μg

The MMT Sampling Train Total value was obtained by summing the MMT Front Half results and the MMT Back Half results using the following guidelines:

- When the train component analytical result is greater than the laboratory reporting limit (RL), the result included in the train total is the actual analytical result or "hit" determined by the laboratory.
- When the train component analytical result is greater than the reliable detection level (RDL), but less than the laboratory reporting limit (RL), the result included in the train total is actual analytical result or "hit" determined by the laboratory and the corresponding "B" flag is carried through the calculation to the train total.
- When the train analytical component result is less than the RDL, but greater than the method detection limit (MDL), the result included in the train total is the RDL and the corresponding "B" flag is carried through the calculation to the train total.
- When the train component analytical result is not detected down to the MDL, the result included in the train total is the RDL and the corresponding "U" flag is carried through the calculation to the train total.
- It should be noted that when the RDL is selected as the default value using the guidelines above, but the RDL is greater than the RL, the RL is included in the train total.

The data flags attached to the MMT Totals are the cumulative set of flags for each train component included as part of the MMT total. A flag attached to a MMT component is carried through to the "MMT Sampling Train Total" column when the associated component analytical result is a significant number in comparison to the MMT Total. That is, if the MMT Total is affected by a MMT component analytical result, the associated flag is carried to the MMT Train Total, but if the MMT Train Total is not affected by a MMT component, the associated flag is not carried through to the MMT Train Total. The combinations of train fractions are conducted following the standard practice of using significant figures found in ASTM E29-93a(1999), "Standard Practice for Using Significant Digits in Test Data to Determine Conformance with Specifications" and Severn Trent Laboratories standard operating procedure number QA-004, "Rounding and Significant Figures".

[4] This flag is the laboratory data flag that corresponds to EPA guidelines. The data flags for these samples are as follows:

- A "U" qualifier indicates that this analyte was analyzed for, but was not detected down to the MDL.
- A "B" flag indicates that this analyte was detected, but at a concentration below the laboratory RL. The analytical result is therefore an estimated value.

[5] When listed, the less than (<) sign indicates that at least one sample fraction result is either a "non-detect" value down to the MDL of the measurement that carries, or an estimated "hit" value that is below the RDL. In either case, the final value for the fraction that is included in the data set total is the default RDL value and the actual value of the total is known to be less than (<) the displayed result.

[6] Entries in this column are project-specific train total flags that are applied to the run total values and are not standard EPA data flags. These project-specific flags are utilized for the INEEL NWCF HLLWE Effluent Gas Emissions Inventory project and are defined as follows:

- An "N" flag in this column indicates that the compound was not measured (detected) in any of the sampling train components, or fractions.
- A "P" flag in this column indicates that the compound was measured (detected) in one or more of the train components, or fractions, but not in all of the sampling train fractions.
- An "A" flag in this column indicates that the compound was measured (detected) in all of the sampling train components, or fractions.

Method 0060 Multi-Metals Train (MMT) Train Total Summary - Run 4 Train Totals
Metallic Analyte Analytical Results Summary
Table A-23. HLLWE Run ID: 0060-END-2

Field Sample Name: Method 0060 Multi-Metals Train (MMT)
Sample Description: Method 0060 Multi-Metals Train (MMT) Totals for Metals Analysis

Analyte	CAS Registry Number	MMT Front Half Composite[1] (µg)		MMT Back Half Composite[2] (µg)		MMT Sampling Train Totals[3] (Total µg)		*Project Specific Flag*[6]
		Risk Result	Flag[4]	Risk Result	Flag[4]	Total[5]	Flag	
Aluminum (Al)	7429-90-5	44		29		73		A
Antimony (Sb)	7440-36-0	2.4	B	1.7	B	< 4.1	B	A
Arsenic (As)	7440-38-2	0.92	U	0.66	U	< 1.6		N
Barium (Ba)	7440-39-3	3.6	B	1.1	B	4.7	B	A
Beryllium (Be)	7440-41-7	0.23	U	0.42	B	< 0.65	B	P
Cadmium (Cd)	7440-43-9	0.13	U	0.14	U	< 0.27		N
Chromium (Cr)	7440-47-3	1.2		3.9		5.1		A
Cobalt (Co)	7440-48-4	1.3	U	1.4	U	< 2.7		N
Copper (Cu)	7440-50-8	0.66	U	0.71	B	< 1.4	B	P
Lead (Pb)	7439-92-1	0.52	U	0.68	B	< 1.2	B	P
Manganese (Mn)	7439-96-5	23		49		72		A
Mercury (Hg)	7439-97-6	0.37	B	110		110		A
Nickel (Ni)	7440-02-0	3.0	B	1.1	B	< 4.1	B	A
Selenium (Se)	7782-49-2	1.7		0.63	B	< 2.3	B	A
Silver (Ag)	7440-22-4	1.9	U	0.71	U	< 2.6		N
Thallium (Tl)	7440-28-0	1.0	U	1.4	U	< 2.4		N
Vanadium (V)	7440-62-2	1.3	U	1.4	U	< 2.7		N
Zinc (Zn)	7440-66-6	6.6		10		17		A

Footnotes:

[1] The MMT Front Half Composite consists of the Quartz Fiber Particulate Filter and the 0.1 N Nitric Acid Probe Rinse Solution.

[2] The MMT Back Half configuration includes seven (7) impingers. The first impinger remains empty prior to sampling and serves as a moisture knockout impinger. The second and third impingers are charged with 5% HNO_3/10% H_2O_2 and are analyzed with the first impinger contents for all of the metallic analytes including mercury. The fourth impinger is left empty and serves to protect the mercury trapping solution from carryover. Its contents and glassware rinses are analyzed separately for mercury, only. The fifth and sixth impingers contain 4% $KMnO_4$/10% H_2SO_4 and are also analyzed for mercury, only. The seventh impinger contains silica gel for a final scrubbing of residual moisture. The MMT back half mercury (Hg) result is the sum of the mercury in the 5% HNO_3/10% H_2O_2 fraction, the fourth empty impinger fraction, the 4% $KMnO_4$/10% H_2SO_4 fraction, and the 8N HCl impinger rinse fraction. The total micrograms (ug) of mercury in these fractions is included in the MMT back half result.

[3] The total mass for each metal found in the MMT sampling train consists of the sum of the MMT train's Front Half metals content plus the train's Back Half metals content. The calculation is as follows:

(Total μg in the Front Half) + (Total μg in the Back Half) = Total μg in the Multi-Metals Sampling Train.
Therefore: (μg) + (μg) = Total μg

The MMT Sampling Train Total value was obtained by summing the MMT Front Half results and the MMT Back Half results using the following guidelines:

- When the train component analytical result is greater than the laboratory reporting limit (RL), the result included in the train total is the actual analytical result or "hit" determined by the laboratory.
- When the train component analytical result is greater than the reliable detection level (RDL), but less than the laboratory reporting limit (RL), the result included in the train total is actual analytical result or "hit" determined by the laboratory and the corresponding "B" flag is carried through the calculation to the train total.
- When the train analytical component result is less than the RDL, but greater than the method detection limit (MDL), the result included in the train total is the RDL and the corresponding "B" flag is carried through the calculation to the train total.
- When the train component analytical result is not detected down to the MDL, the result included in the train total is the RDL and the corresponding "U" flag is carried through the calculation to the train total.
- It should be noted that when the RDL is selected as the default value using the guidelines above, but the RDL is greater than the RL, the RL is included in the train total.

The data flags attached to the MMT Totals are the cumulative set of flags for each train component included as part of the MMT total. A flag attached to a MMT component is carried through to the "MMT Sampling Train Total" column when the associated component analytical result is a significant number in comparison to the MMT Total. That is, if the MMT Total is affected by a MMT component analytical result, the associated flag is carried to the MMT Train Total, but if the MMT Train Total is not affected by a MMT component, the associated flag is not carried through to the MMT Train Total. The combinations of train fractions are conducted following the standard practice of using significant figures found in ASTM E29-93a(1999), "Standard Practice for Using Significant Digits in Test Data to Determine Conformance with Specifications" and Severn Trent Laboratories standard operating procedure number QA-004, "Rounding and Significant Figures".

[4] This flag is the laboratory data flag that corresponds to EPA guidelines. The data flags for these samples are as follows:

- A "U" qualifier indicates that this analyte was analyzed for, but was not detected down to the MDL.

- A "B" flag indicates that this analyte was detected, but at a concentration below the laboratory RL. The analytical result is therefore an estimated value.

[5] When listed, the less than (<) sign indicates that at least one sample fraction result is either a "non-detect" value down to the MDL of the measurement that carries, or an estimated "hit" value that is below the RDL. In either case, the final value for the fraction that is included in the data set total is the default RDL value and the actual value of the total is known to be less than (<) the displayed result.

[6] Entries in this column are project-specific train total flags that are applied to the run total values and are not standard EPA data flags. These project-specific flags are utilized for the INEEL NWCF HLLWE Effluent Gas Emissions Inventory project and are defined as follows:

- An "N" flag in this column indicates that the compound was not measured (detected) in any of the sampling train components, or fractions.
- A "P" flag in this column indicates that the compound was measured (detected) in one or more of the train components, or fractions, but not in all of the sampling train fractions.
- An "A" flag in this column indicates that the compound was measured (detected) in all of the sampling train components, or fractions.

Method 0060 Multi-Metals Blank Train (MMT) Train Total Summary
Run 2 Blank Train Totals
Metallic Analyte Analytical Results Summary
Table A-24. HLLWE Run ID: 0060-BT-1

Field Sample Name: Method 0060 Multi-Metals Blank Train (MMT)
Sample Description: Method 0060 Multi-Metals Blank Train (MMT) Totals for Metals Analysis

Analyte	CAS Registry Number	MMT Front Half Composite[1] (µg)		MMT Back Half Composite[2] (µg)		MMT Sampling Train Totals[3] (Total µg)		*Project Specific Flag*[6]
		Risk Result	Flag[4]	Risk Result	Flag[4]	Total[5]	Flag	
Aluminum (Al)	7429-90-5	46		29		75		A
Antimony (Sb)	7440-36-0	2.5	B	1.7	B	< 4.2	B	A
Arsenic (As)	7440-38-2	0.92	B	0.66	U	< 1.6	B	P
Barium (Ba)	7440-39-3	3.4	B	1.3	B	4.7	B	A
Beryllium (Be)	7440-41-7	0.23	U	0.42	U	< 0.65		N
Cadmium (Cd)	7440-43-9	0.13	U	0.14	B	< 0.27	B	P
Chromium (Cr)	7440-47-3	0.66	U	0.66	U	< 1.3		N
Cobalt (Co)	7440-48-4	1.3	U	1.4	U	< 2.7		N
Copper (Cu)	7440-50-8	0.66	U	0.71	B	< 1.4	B	P
Lead (Pb)	7439-92-1	0.52	U	0.68	B	< 1.2	B	P
Manganese (Mn)	7439-96-5	1.6		3,700		3,700		A
Mercury (Hg)	7439-97-6	0.37	U	2.7	U	< 3.1		N
Nickel (Ni)	7440-02-0	2.8	B	1.2	B	< 4.0	B	A
Selenium (Se)	7782-49-2	1.7		0.63	U	< 2.3		P
Silver (Ag)	7440-22-4	1.9	U	0.71	U	< 2.6		N
Thallium (Tl)	7440-28-0	1.0	U	1.5	U	< 2.5		N
Vanadium (V)	7440-62-2	1.3	U	1.4	U	< 2.7		N
Zinc (Zn)	7440-66-6	4.7		34		39		A

Footnotes:

[1] The MMT Front Half Composite consists of the Quartz Fiber Particulate Filter and the 0.1 N Nitric Acid Probe Rinse Solution.

[2] The MMT Back Half configuration includes seven (7) impingers. The first impinger remains empty prior to sampling and serves as a moisture knockout impinger. The second and third impingers are charged with 5% HNO_3/10% H_2O_2 and are analyzed with the first impinger contents for all of the metallic analytes including mercury. The fourth impinger is left empty and serves to protect the mercury trapping solution from carryover. Its contents and glassware rinses are analyzed separately for mercury, only. The fifth and sixth impingers contain 4% $KMnO_4$/10% H_2SO_4 and are also analyzed for mercury, only. The seventh impinger contains silica gel for a final scrubbing of residual moisture. The MMT back half mercury (Hg) result is the sum of the mercury in the 5% HNO_3/10% H_2O_2 fraction, the fourth empty impinger fraction, the 4% $KMnO_4$/10% H_2SO_4 fraction, and the 8N HCl impinger rinse fraction. The total micrograms (ug) of mercury in these fractions is included in the MMT back half result.

[3] The total mass for each metal found in the MMT sampling train consists of the sum of the MMT train's Front Half metals content plus the train's Back Half metals content. The calculation is as follows:

(Total μg in the Front Half) + (Total μg in the Back Half) = Total μg in the Multi-Metals Sampling Train.
Therefore: (μg) + (μg) = Total μg

The MMT Sampling Train Total value was obtained by summing the MMT Front Half results and the MMT Back Half results using the following guidelines:

- When the train component analytical result is greater than the laboratory reporting limit (RL), the result included in the train total is the actual analytical result or "hit" determined by the laboratory.
- When the train component analytical result is greater than the reliable detection level (RDL), but less than the laboratory reporting limit (RL), the result included in the train total is actual analytical result or "hit" determined by the laboratory and the corresponding "B" flag is carried through the calculation to the train total.
- When the train analytical component result is less than the RDL, but greater than the method detection limit (MDL), the result included in the train total is the RDL and the corresponding "B" flag is carried through the calculation to the train total.
- When the train component analytical result is not detected down to the MDL, the result included in the train total is the RDL and the corresponding "U" flag is carried through the calculation to the train total.
- It should be noted that when the RDL is selected as the default value using the guidelines above, but the RDL is greater than the RL, the RL is included in the train total.

The data flags attached to the MMT Totals are the cumulative set of flags for each train component included as part of the MMT total. A flag attached to a MMT component is carried through to the "MMT Sampling Train Total" column when the associated component analytical result is a significant number in comparison to the MMT Total. That is, if the MMT Total is affected by a MMT component analytical result, the associated flag is carried to the MMT Train Total, but if the MMT Train Total is not affected by a MMT component, the associated flag is not carried through to the MMT Train Total. The combinations of train fractions are conducted following the standard practice of using significant figures found in ASTM E29-93a(1999), "Standard Practice for Using Significant Digits in Test Data to Determine Conformance with Specifications" and Severn Trent Laboratories standard operating procedure number QA-004, "Rounding and Significant Figures".

[4] This flag is the laboratory data flag that corresponds to EPA guidelines. The data flags for these samples are as follows:

- A "U" qualifier indicates that this analyte was analyzed for, but was not detected down to the MDL.
- A "B" flag indicates that this analyte was detected, but at a concentration below the laboratory RL. The analytical result is therefore an estimated value.

[5] When listed, the less than (<) sign indicates that at least one sample fraction result is either a "non-detect" value down to the MDL of the measurement that carries, or an estimated "hit" value that is below the RDL. In either case, the final value for the fraction that is included in the data set total is the default RDL value and the actual value of the total is known to be less than (<) the displayed result.

[6] Entries in this column are project-specific train total flags that are applied to the run total values and are not standard EPA data flags. These project-specific flags are utilized for the INEEL NWCF HLLWE Effluent Gas Emissions Inventory project and are defined as follows:

- An "N" flag in this column indicates that the compound was not measured (detected) in any of the sampling train components, or fractions.
- A "P" flag in this column indicates that the compound was measured (detected) in one or more of the train components, or fractions, but not in all of the sampling train fractions.
- An "A" flag in this column indicates that the compound was measured (detected) in all of the sampling train components, or fractions.

Table A-25. Method 0060 Multi-Metals Train (MMT) Analytical Results Summary Run 2 Front Half Composite Reagent Blank

Field Sample Name: Method 0060 Multi-Metals Train (MMT) Front Half Composite Reagent Blanks
Sample Description: Quartz Fiber Particulate Filter and 0.1 N Nitric Acid Probe Rinse Solution Reagent Blanks for Metals (including Mercury) Analysis
Field Sample ID: A-3297 and A-3298
STL Sample No.: H1F200234-011

Analyte	CAS Registry Number	MMT Front Half Composite Reagent Blank Total µg					
		Lab Result[1]	MDL[2]	RDL[3]	RL[4]	Risk Result for Blank Correction[5]	Flag[6]
Aluminum (Al)	7429-90-5	**43**	5.2	14	20	43	
Antimony (Sb)	7440-36-0	**2.7**	0.60	1.6	6.0	2.7	B
Arsenic (As)	7440-38-2	**0.72**	0.35	0.92	1.0	0.72	B
Barium (Ba)	7440-39-3	**3.6**	0.35	0.92	20	3.6	B
Beryllium (Be)	7440-41-7	**0.20**	0.089	0.23	0.50	0.20	B
Cadmium (Cd)	7440-43-9	**ND**	0.050	0.13	0.50	0	
Chromium (Cr)	7440-47-3	**0.92**	0.25	0.66	1.0	0.92	B
Cobalt (Co)	7440-48-4	**ND**	0.50	1.3	5.0	0	
Copper (Cu)	7440-50-8	**ND**	0.25	0.66	2.5	0	
Lead (Pb)	7439-92-1	**ND**	0.20	0.52	1.0	0	
Manganese (Mn)	7439-96-5	**0.52**	0.15	0.39	1.5	0.52	B
Mercury (Hg)	7439-97-6	**ND**	0.14	0.37	0.40	0	
Nickel (Ni)	7440-02-0	**2.9**	0.44	1.2	4.0	2.9	B
Selenium (Se)	7782-49-2	**2.9**	0.35	0.92	1.0	2.9	
Silver (Ag)	7440-22-4	**ND**	0.71	1.9	2.0	0	
Thallium (Tl)	7440-28-0	**ND**	0.40	1.0	2.0	0	
Vanadium (V)	7440-62-2	**ND**	0.50	1.3	5.0	0	
Zinc (Zn)	7440-66-6	**3.1**	0.23	0.60	2.0	3.1	

Table A-25. Method 0060 Multi-Metals Train (MMT) Analytical Results Summary (Continued)
Run 2 Front Half Composite Reagent Blank

Sample Collection and Analysis Dates:

Date(s) Collected:	June 07, 2001
Date(s) of Digestion (Metals):	June 24, 2001
Date(s) of Digestion (Mercury):	June 25, 2001
Date(s) of Analysis (Metals):	June 28, 2001
Date(s) of Analysis (Mercury):	June 26, 2001

Preparation and Analysis Methods:

SW-846 Method 0060:	"Determination of Metals in Stack Emissions"
SW-846 Method 7470A:	"Mercury in Liquid Waste (Manual Cold Vapor Technique)"
SW-846 Method 6010B:	"Inductively Coupled Plasma - Atomic Emission Spectroscopy"

Footnotes:

[1] This value is the laboratory sample result. When the analytical result is "ND" or not detected, the laboratory analysis did not detect the analyte down to the MDL.

[2] This value is the laboratory Method Detection Limit (MDL) derived according to requirements outlined in 40 CFR Part 136, Appendix B.

[3] The RDL is the Reliable Detection Limit. The RDL is the detection level recommended by EPA's National Research Laboratory in Cincinnati, Ohio, Environmental Monitoring Systems Laboratory (EMSL) in Cincinnati, Ohio, American Chemical Society (ACS) Committee on Environmental Improvement and the Drinking Water Standards Division (DWSD). It is defined as 2.623 times the MDL (2.623 X MDL).

[4] The RL is the laboratory Reporting Limit (RL).

[5] The column titled "Risk Result for Blank Correction" presents a "0" for elements that were analyzed for but not detected down to the method detection limit (MDL). Method 0060 specifically calls out the criteria that are to be applied to blank correct multi-metals train (MMT) data.

[6] This flag is the laboratory data flag that corresponds to EPA guidelines. The data flags for these samples are as follows:

- A "B" flag indicates that this analyte was detected, but at a concentration below the laboratory RL. The analytical result is therefore an estimated value.

Table A-26. Method 0060 Multi-Metals Train (MMT) Analytical Results Summary Run 2 Back Half Composite Reagent Blank

Field Sample Name: Method 0060 Multi-Metals Train (MMT) Back Half Impingers Reagent Blank
Sample Description: 5% HNO_3 and 10% H_2O_2 Impingers Reagent Blank for Metals (including Mercury) Analysis
Field Sample ID: A-3299
STL Sample No.: H1F200234-012

Analyte	CAS Registry Number	MMT Back Half Composite Reagent Blank Total µg					
		Lab Result[1]	MDL[2]	RDL[3]	RL[4]	Risk Result for Blank Correction[5]	Flag[6]
Aluminum (Al)	7429-90-5	**19**	3.5	9.2	23	19	B
Antimony (Sb)	7440-36-0	**0.86**	0.69	1.8	6.9	0.86	B
Arsenic (As)	7440-38-2	**ND**	0.26	0.68	1.1	0	
Barium (Ba)	7440-39-3	**0.96**	0.34	0.89	23	0.96	B
Beryllium (Be)	7440-41-7	**ND**	0.17	0.45	0.57	0	
Cadmium (Cd)	7440-43-9	**0.059**	0.057	0.15	0.57	0.059	B
Chromium (Cr)	7440-47-3	**0.91**	0.26	0.68	1.1	0.91	B
Cobalt (Co)	7440-48-4	**ND**	0.57	1.5	5.7	0	
Copper (Cu)	7440-50-8	**ND**	0.29	0.76	2.9	0	
Lead (Pb)	7439-92-1	**0.43**	0.27	0.71	1.1	0.43	B
Manganese (Mn)	7439-96-5	**14**	0.17	0.45	1.7	14	
Mercury (Hg)	7439-97-6	**ND**	0.20	0.52	0.80	0	
Nickel (Ni)	7440-02-0	**0.56**	0.46	1.2	4.6	0.56	B
Selenium (Se)	7782-49-2	**0.28**	0.25	0.66	1.1	0.28	B
Silver (Ag)	7440-22-4	**ND**	0.29	0.76	2.3	0	
Thallium (Tl)	7440-28-0	**ND**	0.58	1.5	2.3	0	
Vanadium (V)	7440-62-2	**ND**	0.57	1.5	5.7	0	
Zinc (Zn)	7440-66-6	**4.7**	0.51	1.3	2.3	4.7	

Table A-26. Method 0060 Multi-Metals Train (MMT) Analytical Results Summary (Continued)
Run 2 Back Half Composite Reagent Blank

Sample Collection and Analysis Dates:

Date(s) Collected:	June 07, 2001
Date(s) of Digestion (Metals):	June 24, 2001
Date(s) of Digestion (Mercury):	June 25, 2001
Date(s) of Analysis (Metals):	June 28, 2001
Date(s) of Analysis (Mercury):	June 26, 2001

Preparation and Analysis Methods:

SW-846 Method 0060:	"Determination of Metals in Stack Emissions"
SW-846 Method 7470A:	"Mercury in Liquid Waste (Manual Cold Vapor Technique)"
SW-846 Method 6010B:	"Inductively Coupled Plasma - Atomic Emission Spectroscopy"

Footnotes:

[1] This value is the laboratory sample result. When the analytical result is "ND" or not detected, the laboratory analysis did not detect the analyte down to the MDL.

[2] This value is the laboratory Method Detection Limit (MDL) derived according to requirements outlined in 40 CFR Part 136, Appendix B.

[3] The RDL is the Reliable Detection Limit. The RDL is the detection level recommended by EPA's National Research Laboratory in Cincinnati, Ohio, Environmental Monitoring Systems Laboratory (EMSL) in Cincinnati, Ohio, American Chemical Society (ACS) Committee on Environmental Improvement and the Drinking Water Standards Division (DWSD). It is defined as 2.623 times the MDL (2.623 X MDL).

[4] The RL is the laboratory Reporting Limit (RL).

[5] The column titled "Risk Result for Blank Correction" presents a "0" for elements that were analyzed for but not detected down to the method detection limit (MDL). Method 0060 specifically calls out the criteria that are to be applied to blank correct multi-metals train (MMT) data.

[6] This flag is the laboratory data flag that corresponds to EPA guidelines. The data flags for these samples are as follows:

- A "B" flag indicates that this analyte was detected, but at a concentration below the laboratory RL. The analytical result is therefore an estimated value.

Table A-27. Method 0060 Multi-Metals Train (MMT) Analytical Results Summary Run 2 Mercury Impinger Composite Reagent Blank

Field Sample Name: Method 0060 Multi-Metals Train (MMT) Mercury Impingers Reagent Blank
Sample Description: 4% $KMnO_4$ and 10% H_2SO_4 Impingers Reagent Blank for Mercury (Hg) Analysis
Field Sample ID: A-3300
STL Sample No.: H1F200234-013

Analyte	CAS Registry Number	MMT Mercury Impinger Composite Total µg					
		Lab Result[1]	MDL[2]	RDL[3]	RL[4]	Risk Result for Blank Correction[5]	Flag[6]
Mercury (Hg)	7439-97-6	**ND**	0.10	0.26	0.42	0	

Sample Collection and Analysis Dates:

Date(s) Collected: June 07, 2001
Date(s) of Digestion: June 25, 2001
Date(s) of Analysis: June 26, 2001

Preparation and Analysis Methods:

SW-846 Method 0060: "Determination of Metals in Stack Emissions"
SW-846 Method 7470A: "Mercury in Liquid Waste (Manual Cold Vapor Technique)"

Table A-27. Method 0060 Multi-Metals Train (MMT) Analytical Results Summary (Continued) Run 2 Mercury Impinger Composite Reagent Blank

Footnotes:

[1] This value is the laboratory sample result. When the analytical result is "ND" or not detected, the laboratory analysis did not detect the analyte down to the MDL.

[2] This value is the laboratory Method Detection Limit (MDL) derived according to requirements outlined in 40 CFR Part 136, Appendix B.

[3] The RDL is the Reliable Detection Limit. The RDL is the detection level recommended by EPA's National Research Laboratory in Cincinnati, Ohio, Environmental Monitoring Systems Laboratory (EMSL) in Cincinnati, Ohio, American Chemical Society (ACS) Committee on Environmental Improvement and the Drinking Water Standards Division (DWSD). It is defined as 2.623 times the MDL (2.623 X MDL).

[4] The RL is the laboratory Reporting Limit (RL).

[5] The column titled "Risk Result for Blank Correction" presents a "0" for elements that were analyzed for but not detected down to the method detection limit (MDL). Method 0060 specifically calls out the criteria that are to be applied to blank correct multi-metals train (MMT) data.

[6] This flag is the laboratory data flag that corresponds to EPA guidelines. The data flags for these samples are as follows:

- A "B" flag indicates that this analyte was detected, but at a concentration below the laboratory RL. The analytical result is therefore an estimated value.

Table A-28. Method 0060 Multi-Metals Train (MMT) Analytical Results Summary Run 2 HCl Impinger Rinse Solution Reagent Blank

Field Sample Name: Method 0060 Multi-Metals Train (MMT) Mercury Impinger HCl Rinse Solution Reagent Blank
Sample Description: 8N HCl Impinger Rinse Solution Reagent Blank for Mercury (Hg) Analysis
Field Sample ID: A-3301
STL Sample No.: H1F200234-014

Analyte	CAS Registry Number	MMT 8N HCl Mercury Impinger Rinse Total µg					
		Lab Result[1]	MDL[2]	RDL[3]	RL[4]	Risk Result for Blank Correction[5]	Flag[6]
Mercury (Hg)	7439-97-6	ND	0.23	0.60	0.92	0	

Sample Collection and Analysis Dates:

Date(s) Collected: June 07, 2001
Date(s) of Digestion: June 25, 2001
Date(s) of Analysis: June 26, 2001

Preparation and Analysis Methods:

SW-846 Method 0060: "Determination of Metals in Stack Emissions"
SW-846 Method 7470A: "Mercury in Liquid Waste (Manual Cold Vapor Technique)"

Table A-28. Method 0060 Multi-Metals Train (MMT) Analytical Results Summary (Continued) Run 2 HCl Impinger Rinse Solution Reagent Blank

Footnotes:

[1] This value is the laboratory sample result. When the analytical result is "ND" or not detected, the laboratory analysis did not detect the analyte down to the MDL.

[2] This value is the laboratory Method Detection Limit (MDL) derived according to requirements outlined in 40 CFR Part 136, Appendix B.

[3] The RDL is the Reliable Detection Limit. The RDL is the detection level recommended by EPA's National Research Laboratory in Cincinnati, Ohio, Environmental Monitoring Systems Laboratory (EMSL) in Cincinnati, Ohio, American Chemical Society (ACS) Committee on Environmental Improvement and the Drinking Water Standards Division (DWSD). It is defined as 2.623 times the MDL (2.623 X MDL).

[4] The RL is the laboratory Reporting Limit (RL).

[5] The column titled "Risk Result for Blank Correction" presents a "0" for elements that were analyzed for but not detected down to the method detection limit (MDL). Method 0060 specifically calls out the criteria that are to be applied to blank correct multi-metals train (MMT) data.

[6] This flag is the laboratory data flag that corresponds to EPA guidelines. The data flags for these samples are as follows:

- A "B" flag indicates that this analyte was detected, but at a concentration below the laboratory RL. The analytical result is therefore an estimated value.

Table A-29. Method 0060 Multi-Metals Train (MMT) Analytical Results Summary Run 2 INTEC Deionized Water Reagent Blank

Field Sample Name: INTEC Deionized (D.I.) Water Reagent Blank
Sample Description: INTEC Deionized (D.I.) Water Reagent Blank for Metals (including Mercury) Analysis
Field Sample ID: A-3348
STL Sample No.: H1F200234-015

Analyte	CAS Registry Number	MMT INTEC Deionized (D.I.) Water Reagent Blank Total µg					
		Lab Result[1]	MDL[2]	RDL[3]	RL[4]	Risk Result for Blank Correction[5]	Flag[6]
Aluminum (Al)	7429-90-5	**5.2**	5.2	14	20	5.2	B
Antimony (Sb)	7440-36-0	**ND**	0.60	1.6	6.0	0	
Arsenic (As)	7440-38-2	**ND**	0.35	0.92	1.0	0	
Barium (Ba)	7440-39-3	**ND**	0.35	0.92	20	0	
Beryllium (Be)	7440-41-7	**0.13**	0.089	0.23	0.50	0.13	B
Cadmium (Cd)	7440-43-9	**ND**	0.050	0.13	0.50	0	
Chromium (Cr)	7440-47-3	**ND**	0.25	0.66	1.0	0	
Cobalt (Co)	7440-48-4	**ND**	0.50	1.3	5.0	0	
Copper (Cu)	7440-50-8	**ND**	0.25	0.66	2.5	0	
Lead (Pb)	7439-92-1	**ND**	0.20	0.52	1.0	0	
Manganese (Mn)	7439-96-5	**ND**	0.15	0.39	1.5	0	
Mercury (Hg)	7439-97-6	**ND**	0.14	0.37	0.40	0	
Nickel (Ni)	7440-02-0	**ND**	0.44	1.2	4.0	0	
Selenium (Se)	7782-49-2	**ND**	0.35	0.92	1.0	0	
Silver (Ag)	7440-22-4	**ND**	0.71	1.9	2.0	0	
Thallium (Tl)	7440-28-0	**ND**	0.40	1.0	2.0	0	
Vanadium (V)	7440-62-2	**ND**	0.50	1.3	5.0	0	
Zinc (Zn)	7440-66-6	**0.93**	0.23	0.60	2.0	0.93	B

Table A-29. Method 0060 Multi-Metals Train (MMT) Analytical Results Summary (Continued) Run 2 INTEC Deionized Water Reagent Blank

Sample Collection and Analysis Dates:

Date(s) Collected:	June 07, 2001
Date(s) of Digestion (Metals):	June 24, 2001
Date(s) of Digestion (Mercury):	June 25, 2001
Date(s) of Analysis (Metals):	June 28, 2001
Date(s) of Analysis (Mercury):	June 26, 2001

Preparation and Analysis Methods:

SW-846 Method 0060:	"Determination of Metals in Stack Emissions"
SW-846 Method 7470A:	"Mercury in Liquid Waste (Manual Cold Vapor Technique)"
SW-846 Method 6010B:	"Inductively Coupled Plasma - Atomic Emission Spectroscopy"

Footnotes:

[1] This value is the laboratory sample result. When the analytical result is "ND" or not detected, the laboratory analysis did not detect the analyte down to the MDL.

[2] This value is the laboratory Method Detection Limit (MDL) derived according to requirements outlined in 40 CFR Part 136, Appendix B.

[3] The RDL is the Reliable Detection Limit. The RDL is the detection level recommended by EPA's National Research Laboratory in Cincinnati, Ohio, Environmental Monitoring Systems Laboratory (EMSL) in Cincinnati, Ohio, American Chemical Society (ACS) Committee on Environmental Improvement and the Drinking Water Standards Division (DWSD). It is defined as 2.623 times the MDL (2.623 X MDL).

[4] The RL is the laboratory Reporting Limit (RL).

[5] The column titled "Risk Result for Blank Correction" presents a "0" for elements that were analyzed for but not detected down to the method detection limit (MDL). Method 0060 specifically calls out the criteria that are to be applied to blank correct multi-metals train (MMT) data.

[6] This flag is the laboratory data flag that corresponds to EPA guidelines. The data flags for these samples are as follows:

- A "B" flag indicates that this analyte was detected, but at a concentration below the laboratory RL. The analytical result is therefore an estimated value.

Table A-30. Final (Post-Test) Acetone Probe Rinse and Nitric Acid Probe Rinse Composite Metallic Analyte Analytical Results Summary

Field Sample Name: Final (Post-Test) Acetone Probe Rinse and Nitric Acid Probe Rinse Composite
Sample Description: Final (Post-Test) Acetone Probe Rinse and Nitric Acid Probe Rinse Composite Sample for Metals (including Mercury) Analysis
Field Sample ID: A-3346 and A-3347
STL Sample No.: H1G030222-002

Analyte	CAS Registry Number	Final (Post-Test) Acetone Probe Rinse and Nitric Acid Probe Rinse Composite Sample Total µg[1]					
		Lab Result[2]	MDL[3]	RDL[4]	RL[5]	Risk Result[6,7]	Flag[8]
Aluminum (Al)	7429-90-5	**120**	5.2	14	20.0	120	
Antimony (Sb)	7440-36-0	1.3	0.60	**1.6**	6.0	< 1.6	B
Arsenic (As)	7440-38-2	ND	0.35	**0.92**	1.0	< 0.92	
Barium (Ba)	7440-39-3	**3.2**	0.35	0.92	20.0	3.2	B
Beryllium (Be)	7440-41-7	ND	0.089	**0.23**	0.50	< 0.23	
Cadmium (Cd)	7440-43-9	**4.1**	0.050	0.13	0.50	4.1	
Chromium (Cr)	7440-47-3	**1.7**	0.25	0.66	1.0	1.7	
Cobalt (Co)	7440-48-4	0.85	0.50	**1.3**	5.0	< 1.3	B
Copper (Cu)	7440-50-8	**2.5**	0.25	0.66	2.5	2.5	
Lead (Pb)	7439-92-1	**3.2**	0.20	0.52	1.0	3.2	
Manganese (Mn)	7439-96-5	**6.1**	0.15	0.39	1.5	6.1	
Mercury (Hg)	7439-97-6	**0.77**	0.14	0.37	0.40	0.77	
Nickel (Ni)	7440-02-0	**3.2**	0.44	1.2	4.0	3.2	B
Selenium (Se)	7782-49-2	ND	0.35	**0.92**	1.0	< 0.92	
Silver (Ag)	7440-22-4	1.8	0.71	**1.9**	2.0	< 1.9	B
Thallium (Tl)	7440-28-0	ND	0.40	**1.0**	2.0	< 1.0	
Vanadium (V)	7440-62-2	ND	0.50	**1.3**	5.0	< 1.3	
Zinc (Zn)	7440-66-6	**50**	0.23	0.60	2.0	50	

Table A-30. Final (Post-Test) Acetone Probe Rinse and Nitric Acid Probe Rinse Composite Metallic Analyte Analytical Results Summary (Continued)

Sample Collection and Analysis Dates:

Date(s) Collected:	June 25, 2001
Date(s) of Digestion (Metals):	July 08, 2001
Date(s) of Digestion (Mercury):	July 08, 2001
Date(s) of Analysis (Metals):	July 28, 2001
Date(s) of Analysis (Mercury):	July 08, 2001

Preparation and Analysis Methods:

SW-846 Method 0060:	"Determination of Metals in Stack Emissions"
SW-846 Method 7470A:	"Mercury in Liquid Waste (Manual Cold Vapor Technique)"
SW-846 Method 6010B:	"Inductively Coupled Plasma - Atomic Emission Spectroscopy"

Table A-30. Final (Post-Test) Acetone Probe Rinse and Nitric Acid Probe Rinse Composite Metallic Analyte Analytical Results Summary (Continued)

Footnotes:

[1] Based on the selection rules, the **bolded** value is the value or default value assigned to the analyte and is carried through to the sampling train total, if it is determined to be significant.

[2] This value is the laboratory sample result. When the analytical result is "ND" or not detected, the laboratory analysis did not detect the analyte down to the MDL.

[3] This value is the laboratory Method Detection Limit (MDL) derived according to requirements outlined in 40 CFR Part 136, Appendix B.

[4] The RDL is the Reliable Detection Limit. The RDL is the detection level recommended by EPA's National Research Laboratory in Cincinnati, Ohio, Environmental Monitoring Systems Laboratory (EMSL) in Cincinnati, Ohio, American Chemical Society (ACS) Committee on Environmental Improvement and the Drinking Water Standards Division (DWSD). It is defined as 2.623 times the MDL (2.623 X MDL).

[5] The RL is the laboratory Reporting Limit (RL).

[6] Based on the selection rules, the **bolded** value is the value or default value assigned to the analyte using the following guidelines:

- When the analytical result is greater than the laboratory reporting limit (RL), the result selected by boldface type is the actual analytical result or "hit" determined by the laboratory.
- When the analytical result is greater than the reliable detection level (RDL), but less than the laboratory reporting limit (RL), the result selected by boldface type is the actual analytical result or "hit" determined by the laboratory.
- When the analytical result is less than the RDL, but greater than the method detection limit (MDL), the result selected by boldface type is the RDL.
- When the analytical result is not detected down to the MDL, the result selected by boldface type is the RDL.
- It should be noted that when the RDL is selected using the guidelines above, but the RL is less than the RDL, the RL is included as the "Risk Result".

[7] When listed, the less than (<) sign indicates that the sample result is either a "non-detect" value down to the MDL of the measurement that carries, or an estimated "hit" value that is below the RDL. In either case, the final value is the default RDL value and the actual value is known to be less than (<) the displayed result.

[8] This flag is the laboratory data flag that corresponds to EPA guidelines. The data flags for these samples are as follows:

- A "U" qualifier indicates that this analyte was analyzed for, but was not detected down to the MDL.
- A "B" flag indicates that this analyte was detected, but at a concentration below the laboratory RL. The analytical result is therefore an estimated value.

APPENDIX B

OFFGAS SAMPLING DATA

CONTENTS

Table B-1. SVOC-STRT-1 ..... B1
Table B-2. SVOC-END-1 ..... B2
Table B-3. SVOC-STRT-2 ..... B3
Table B-4. SVOC-END-2 ..... B4
Table B-5. 0031-STRT-1 ..... B5
Table B-6. 0031-END-1 ..... B6
Table B-7. 0031-STRT-2 ..... B7
Table B-8. 0031-END-2 ..... B8
Table B-9. 0050-STRT-1 ..... B9
Table B-10. 0050-END-1 ..... B10
Table B-11. 0050-STRT-2 ..... B11
Table B-12. 0050-END-2 ..... B12
Table B-13. 0060-STRT-1 ..... B13
Table B-14. 0060-END-1 ..... B14
Table B-15. 0060-STRT-2 ..... B15
Table B-16. 0060-END-2 ..... B16
Table B-17. SVOC emission rates – grams per second comparisons B17
Table B-18. 0031 emission rates – grams per second comparisons B18
Table B-19. 0050 emission rates – grams per second comparisons B19
Table B-20. 0060 emission rates – grams per second comparisons B20
Table B-21. 0060 blank corrected emission rates – grams per second comparisons B21
Table B-22. SVOC concentration-basis B22
Table B-23. 0031 concentration-basis B23
Table B-24. 0050 concentration-basis B24
Table B-25. 0060 concentration-basis B25
Table B-26. 0060 blank corrected concentration-basis B26

Table B-1. SVOC-STRT-1.

SVOC SAMPLING DATA SHEET FOR HLLWE TESTS

Site:	HLLWE Offgas Tie-in	Sampling Location:	MAN-OFG-73	Nozzle No.:	2-01	Est. DP:	0.15	Est. Tstack, °F:	133
Project:	01-1062-01-0866	Duct ID, inches:	12	Nozzle Size, in.:	0.3140	Est. K:	6.53	Est. vs, ft/s:	25.8
Date:	6/18/2001	Static Pressure, in. WG:	-17.5	Pitot No.:	JM-2	Est. DH:	0.98	Operator(s):	FE, RW, JA
Run No.:	0010-STRT-1	Est. O2, %:	20.6	Pitot Coeff.:	0.84	Est. DGM Temperature, °F			
Run Type:	TEST	Est CO2, %:	0	Meter Box No.	2	**Meter Box Leak Checks:**		Pitot:	pass
Pbar., in. Hg:	25.238	Est. Moist., %:	1.3%	ΔH@:	1.5673	Pretest	0.004 cfm @	15 in. Hg	
Tambient, °F:	60	Impinger Box No.:	9	Y-factor:	1.0328			Pitot:	pass
DGM vol. Goal (m^3):	3.00	DGM vol. Goal (ft^3):	127.080	Min. ending DGM vol. (ft^3):	357.541	Post-test	0.002 cfm @	8 in. Hg	

Sampling Time (min.)	Clock Time (24hr)	Velocity ΔP (in. WG)		Meter ΔH (in. WG)	Meter Volume (cubic feet)	TEMPERATURE (°F)							Pump Vacuum (in. Hg)	%I_i	COMMENTS
						Heated Line	Stack	Meter In	Meter Out	Filter	Impinger Exit	Aux. (XAD)			
0	8:30	0.15	0.387	1.30	230.461	260	133	72	64	263	53	45	8.0	-	
10	8:40	0.15	0.387	1.30	237.360	261	133	76	65	262	49	44	8.0	102	O2 analyzer =20.5%
20	8:50	0.15	0.387	1.30	244.556	247	133	79	67	264	50	44	8.0	106	O2 analyzer =20.5%
30	9:00	0.15	0.387	1.30	251.562	261	132	82	68	263	46	45	8.0	103	O2 analyzer =20.5%
40	9:10	0.15	0.387	1.30	258.689	261	132	83	70	262	45	45	8.0	105	O2 analyzer =20.5%
50	9:20	0.15	0.387	1.30	265.823	261	132	84	71	261	45	47	8.0	104	O2 analyzer =20.5%
60	9:30	0.15	0.387	1.30	272.975	261	132	84	72	262	46	48	8.0	105	O2 analyzer =20.5%
70	9:40	0.15	0.387	1.30	280.105	261	132	85	75	261	46	49	8.0	104	O2 analyzer =20.5%
80	9:50	0.15	0.387	1.30	287.461	261	132	85	73	264	46	50	8.0	107	O2 analyzer =20.5%
90	10:00	0.15	0.387	1.30	294.590	261	132	86	73	262	47	50	8.0	104	O2 analyzer =20.5%
100	10:10	0.15	0.387	1.30	301.627	261	132	87	74	263	47	50	8.0	102	O2 analyzer =20.6%
110	10:20	0.15	0.387	1.30	308.833	261	132	87	74	262	48	51	8.0	105	O2 analyzer =20.5%
120	10:30	0.15	0.387	1.30	315.990	261	132	88	75	263	48	50	8.0	104	O2 analyzer =20.6%
130	10:40	0.15	0.387	1.30	323.180	261	132	88	75	262	48	51	8.0	104	O2 analyzer =20.6%
140	10:50	0.15	0.387	1.30	330.485	261	132	89	76	261	49	55	8.0	106	O2 analyzer =20.6%
150	11:00	0.15	0.387	1.30	337.600	261	132	89	77	262	49	50	8.0	103	O2 analyzer =20.6%
160	11:10	0.15	0.387	1.30	344.840	261	132	89	77	261	48	49	8.0	105	O2 analyzer =20.5%
170	11:20	0.15	0.387	1.30	352.138	261	132	90	78	262	48	49	8.0	106	O2 analyzer =20.5%
180	11:30	0.15	0.387	1.30	359.336	261	132	90	78	262	49	49	8.0	104	END OF TEST
Total	Total	ΔP_{avg}		Average	Total	Average Temperatures (°F)							Max.	Ave. %I_i	
180	3:00	0.150	0.387	1.30	128.875	260	132	85	73	262	48	48	8.0	104	

Table B-1. SVOC-STRT-1.

0010 CONFIGURATION TRAIN COMPONENT DATA SHEET
for HLLWE OFFGAS SAMPLING

Site: HLLWE Offgas Tie-in

Date: 6/18/2001

Run No.: 0010-STRT-1

Impinger Box no.: 9

XAD trap Quanterra No.: **A-3355**

Component:	XAD	KO-1	Imp-1	Imp-2	Acid Scrub Section			
Type:	trap	short stem	modified	G-S	short stem	modified	modified	
Reagent:	XAD-2	None	Organics free water		None	**2N** NaOH	Silica Gel	
Nominal Contents:	20 - 40g, dry	Empty	100 mL	100 mL	Empty	**100** mL	300-400g	
Post-test Wt., g:	272.8	544.6	676.9	690.5	573.6	730.8	804.2	Impinger Wt. Gain
Pre-test Wt., g:	272.1	541.7	677.7	690.8	572.8	732.2	782.0	
Wt. Gain, g:	0.7	2.9	-0.8	-0.3	0.8	-1.4	22.2	24.1
Post-test Volume:		0.0	100.0	100.0	0.0			Impinger Vol. Gain
Pre-test Volume:		0.0	100.0	100.0	0.0			
Volume Gain:		0.0	0.0	0.0	0.0			0.0
Post-test pH:			6.0	6.0		14.0		

Filter Lot # STL-A4023 OF water Lot # QCLAB-1 NaOH Lot # 000381

O2% 20.6

CO2% 0.0

Record impinger change-out and other important information below:

Table B-1. SVOC-STRT-1.

FIELD DATA CALCULATIONS

Project:	01-1062-01-0866		
Run Date:	6/18/2001		
Run Identification:	0010-STRT-1		
PARAMETER	SYMBOL	UNITS	
Absolute Pressure in the Duct	Pabs	in. Hg	23.951
Average Duct Gas Temperature	Ts	R	592
Average Meter Temperature	Tm	R	538
Average Gas Oxygen Content	Co2,m	%	20.6
Average Gas Carbon Dioxide Content	Cco2,m	%	0.0
Total Impinger Weight Gain (water)	Ww	grams	24.1
Nozzle Area	An	ft^2	0.000538
Duct Area	As	ft^2	0.7854
Sample Volume	VmStd	dscf	110.435
Sample Volume (SI)	VmStdm	dscm	3.127
Average Sampling Rate	Qm	dscf/m	0.614
Volume of Water Vapor	VwStd	scf	1.136
Volume of Water Vapor (SI)	VwStdm	scm	0.0322
Moisture Fraction	Bws	-	0.010
Dry Gas Molecular Weight	Md	g/g-mol	28.82
Wet Gas Molecular Weight	Ms	g/g-mol	28.71
Gas Velocity at Nozzle	vn	ft/s	25.8
Gas Velocity at Nozzle (SI)	vnm	m/s	7.86
Average Gas Velocity	vncor	ft/s	21.77
Dry Offgas Flow Rate	Qsd	dscf/h	43,494
Dry Offgas Flow Rate (SI)	Qsdm	dscm/h	1,231.6
Actual Offgas Flow Rate	Q	acf/h	61,566
Intermediate Isokinetic Rate	Ii	%	104.6
Final Isokinetic Rate	**I**	**%**	**104.3**

Table B-1. SVOC-STRT-1.

Project:	01-1062-01-0866
Run Date:	6/18/2001
Run Identification:	0010-STRT-1
Run Type:	TEST
Lab Report Date:	8/28/2001
Lab Report Status: (preliminary or final)	Final

RESULTS
- **without blank corrections**
- **final presentation should be rounded to two significant digits**

	CONCENTRATIONS						MASS FLOW RATES					
	Actual (µg/acm)		Standard (µg/scm)		Dry Standard (µg/dscm)		µg/min		grams/sec		lb/h	
Acenaphthene	<	2.214e0	<	3.1e0	<	3.1e0	<	6.4e1	<	1.1e-6	<	8.5e-6
Acenaphthylene	<	2.1e0	<	3.0e0	<	3.0e0	<	6.2e1	<	1.0e-6	<	8.2e-6
Acetophenone	<,J	1.1e1	<,J	1.6e1	<,J	1.6e1	<,J	3.2e2	<,J	5.4e-6	<,J	4.3e-5
Aniline	<	2.5e1	<	3.5e1	<	3.5e1	<	7.2e2	<	1.2e-5	<	9.6e-5
Anthracene	<	2.1e0	<	3.0e0	<	3.0e0	<	6.2e1	<	1.0e-6	<	8.2e-6
Benzidine	<	1.5e2	<	2.1e2	<	2.1e2	<	4.4e3	<	7.3e-5	<	5.8e-4
Benzoic acid	E	1.1e3	E	1.6e3	E	1.6e3	E	3.2e4	E	5.4e-4	E	4.3e-3
Benzo(a)anthracene	<	2.7e0	<	3.8e0	<	3.8e0	<	7.9e1	<	1.3e-6	<	1.0e-5
Benzo(a)pyrene	<	2.9e1	<	4.1e1	<	4.2e1	<	8.5e2	<	1.4e-5	<	1.1e-4
Benzo(b)fluoranthene	<	6.8e1	<	9.5e1	<	9.6e1	<	2.0e3	<	3.3e-5	<	2.6e-4
Benzo(g,h,i)perylene	<	3.8e1	<	5.4e1	<	5.4e1	<	1.1e3	<	1.9e-5	<	1.5e-4
Benzo(k)fluoranthene	<	9.7e1	<	1.4e2	<	1.4e2	<	2.8e3	<	4.7e-5	<	3.7e-4
Benzyl alcohol	<	1.3e2	<	1.8e2	<	1.8e2	<	3.7e3	<	6.2e-5	<	4.9e-4
bis(2-Chloroethoxy)methane	<	2.3e0	<	3.2e0	<	3.2e0	<	6.6e1	<	1.1e-6	<	8.7e-6
bis(2-Chloroethyl)ether	<	2.5e0	<	3.5e0	<	3.5e0	<	7.2e1	<	1.2e-6	<	9.6e-6
bis(2-Ethylhexyl)phthalate	<,J	2.7e1	<,J	3.8e1	<,J	3.8e1	<,J	7.9e2	<,J	1.3e-5	<,J	1.0e-4
4-Bromophenyl-phenylether	<	2.1e0	<	3.0e0	<	3.0e0	<	6.2e1	<	1.0e-6	<	8.2e-6
Butylbenzylphthalate	<	2.9e0	<	4.1e0	<	4.2e0	<	8.5e1	<	1.4e-6	<	1.1e-5
Carbazole	<	2.9e0	<	4.1e0	<	4.2e0	<	8.5e1	<	1.4e-6	<	1.1e-5
4-Chloro-3-methylphenol	<	3.8e0	<	5.4e0	<	5.4e0	<	1.1e2	<	1.9e-6	<	1.5e-5
4-Chloroaniline	<	2.0e1	<	2.8e1	<	2.9e1	<	5.9e2	<	9.8e-6	<	7.8e-5
2-Chloronaphthalene	<	2.1e0	<	2.9e0	<	3.0e0	<	6.1e1	<	1.0e-6	<	8.1e-6
2-Chlorophenol	<	2.5e0	<	3.5e0	<	3.5e0	<	7.2e1	<	1.2e-6	<	9.6e-6
4-Chlorophenyl phenyl ether	<	2.5e0	<	3.5e0	<	3.5e0	<	7.2e1	<	1.2e-6	<	9.6e-6
Chrysene	<	2.7e0	<	3.8e0	<	3.8e0	<	7.9e1	<	1.3e-6	<	1.0e-5
Di-n-butylphthalate	<,J	2.3e1	<,J	3.2e1	<,J	3.2e1	<,J	6.6e2	<,J	1.1e-5	<,J	8.7e-5
Di-n-octylphthalate	<,J	3.6e1	<,J	5.1e1	<,J	5.1e1	<,J	1.1e3	<,J	1.8e-5	<,J	1.4e-4
Dibenz(a,h)anthracene	<	3.8e1	<	5.4e1	<	5.4e1	<	1.1e3	<	1.9e-5	<	1.5e-4
Dibenzofuran	<	2.5e0	<	3.5e0	<	3.5e0	<	7.2e1	<	1.2e-6	<	9.6e-6
1,2-Dichlorobenzene	<	2.5e0	<	3.5e0	<	3.5e0	<	7.2e1	<	1.2e-6	<	9.6e-6
1,3-Dichlorobenzene	<	2.7e0	<	3.8e0	<	3.8e0	<	7.9e1	<	1.3e-6	<	1.0e-5
1,4-Dichlorobenzene	<,J	3.6e0	<,J	5.1e0	<,J	5.1e0	<,J	1.1e2	<,J	1.8e-6	<,J	1.4e-5
3,3'-Dichlorobenzidine	<	2.5e1	<	3.5e1	<	3.5e1	<	7.2e2	<	1.2e-5	<	9.6e-5
2,4-Dichlorophenol	<	2.9e0	<	4.1e0	<	4.2e0	<	8.5e1	<	1.4e-6	<	1.1e-5
Diethylphthalate	<,J	3.6e0	<,J	5.1e0	<,J	5.1e0	<,J	1.1e2	<,J	1.8e-6	<,J	1.4e-5
Dimethyl phthalate	<	2.2e0	<	3.0e0	<	3.1e0	<	6.3e1	<	1.1e-6	<	8.3e-6
2,4-Dimethylphenol	<	1.3e1	<	1.9e1	<	1.9e1	<	3.9e2	<	6.5e-6	<	5.1e-5
4,6-Dinitro-2-methylphenol	<	2.9e1	<	4.1e1	<	4.2e1	<	8.5e2	<	1.4e-5	<	1.1e-4
2,4-Dinitrophenol	<	6.1e1	<	8.5e1	<	8.6e1	<	1.8e3	<	3.0e-5	<	2.3e-4
2,4-Dinitrotoluene	<	2.9e0	<	4.1e0	<	4.2e0	<	8.5e1	<	1.4e-6	<	1.1e-5
2,6-Dinitrotoluene	<	2.7e0	<	3.8e0	<	3.8e0	<	7.9e1	<	1.3e-6	<	1.0e-5
1,2-Diphenylhydrazine	<	2.2e0	<	3.1e0	<	3.1e0	<	6.4e1	<	1.1e-6	<	8.5e-6
Fluoranthene	<	2.3e0	<	3.2e0	<	3.2e0	<	6.6e1	<	1.1e-6	<	8.7e-6
Fluorene	<	2.3e0	<	3.2e0	<	3.2e0	<	6.6e1	<	1.1e-6	<	8.7e-6
Hexachlorocyclopentadiene	<	3.6e1	<	5.1e1	<	5.1e1	<	1.1e3	<	1.8e-5	<	1.4e-4
Hexachlorobenzene	<	2.5e0	<	3.5e0	<	3.5e0	<	7.2e1	<	1.2e-6	<	9.6e-6
Hexachlorobutadiene	<	3.4e0	<	4.7e0	<	4.8e0	<	9.8e1	<	1.6e-6	<	1.3e-5
Hexachloroethane	<	3.6e0	<	5.1e0	<	5.1e0	<	1.1e2	<	1.8e-6	<	1.4e-5
Indeno(1,2,3-cd)pyrene	<	3.4e1	<	4.7e1	<	4.8e1	<	9.8e2	<	1.6e-5	<	1.3e-4
Isophorone	<	2.3e0	<	3.2e0	<	3.2e0	<	6.6e1	<	1.1e-6	<	8.7e-6
2-Methylnaphthalene	<	2.3e0	<	3.2e0	<	3.2e0	<	6.6e1	<	1.1e-6	<	8.7e-6
2-Methylphenol	<	1.1e1	<	1.5e1	<	1.5e1	<	3.1e2	<	5.1e-6	<	4.1e-5
3-Methylphenol & 4-Methylphenol	<	7.7e0	<	1.1e1	<	1.1e1	<	2.2e2	<	3.7e-6	<	3.0e-5
N-Nitroso-di-n-propylamine	<	2.5e0	<	3.5e0	<	3.5e0	<	7.2e1	<	1.2e-6	<	9.6e-6
N-Nitrosodimethylamine	<	2.5e0	<	3.5e0	<	3.5e0	<	7.2e1	<	1.2e-6	<	9.6e-6
N-Nitrosodiphenylamine	<	3.4e0	<	4.7e0	<	4.8e0	<	9.8e1	<	1.6e-6	<	1.3e-5
Naphthalene	<	2.5e0	<	3.5e0	<	3.5e0	<	7.2e1	<	1.2e-6	<	9.6e-6
2-Nitroaniline	<	2.5e0	<	3.5e0	<	3.5e0	<	7.2e1	<	1.2e-6	<	9.6e-6
3-Nitroaniline	<	9.3e0	<	1.3e1	<	1.3e1	<	2.7e2	<	4.5e-6	<	3.6e-5
4-Nitroaniline	<	8.1e0	<	1.1e1	<	1.2e1	<	2.4e2	<	3.9e-6	<	3.1e-5

Table B-1. SVOC-STRT-1.

Project:	01-1062-01-0866
Run Date:	6/18/2001
Run Identification:	0010-STRT-1
Run Type:	TEST
Lab Report Date:	8/28/2001
Lab Report Status: (preliminary or final)	Final

RESULTS
• without blank corrections
• final presentation should be rounded to two significant digits

	CONCENTRATIONS						MASS FLOW RATES					
	Actual (µg/acm)		Standard (µg/scm)		Dry Standard (µg/dscm)		µg/min		grams/sec		lb/h	
Nitrobenzene	<,J	3.6e0	<,J	5.1e0	<,J	5.1e0	<,J	1.1e2	<,J	1.8e-6	<,J	1.4e-5
2-Nitrophenol	<	2.1e1	<	2.9e1	<	2.9e1	<	6.0e2	<	1.0e-5	<	7.9e-5
4-Nitrophenol	<,J	1.7e1	<,J	2.4e1	<,J	2.4e1	<,J	5.0e2	<,J	8.3e-6	<,J	6.6e-5
2,2'-Oxybis(1-chloropropane)	<	3.2e0	<	4.4e0	<	4.5e0	<	9.2e1	<	1.5e-6	<	1.2e-5
Pentachlorobenzene	<	2.3e0	<	3.2e0	<	3.2e0	<	6.6e1	<	1.1e-6	<	8.7e-6
Pentachloronitrobenzene	<	2.5e0	<	3.5e0	<	3.5e0	<	7.2e1	<	1.2e-6	<	9.6e-6
Pentachlorophenol	<	6.8e1	<	9.5e1	<	9.6e1	<	2.0e3	<	3.3e-5	<	2.6e-4
Phenanthrene	<	2.2e0	<	3.1e0	<	3.1e0	<	6.4e1	<	1.1e-6	<	8.5e-6
Phenol	<	1.7e1	<	2.4e1	<	2.5e1	<	5.1e2	<	8.4e-6	<	6.7e-5
Pyrene	<	2.3e0	<	3.2e0	<	3.2e0	<	6.6e1	<	1.1e-6	<	8.7e-6
Pyridine	<	3.8e0	<	5.4e0	<	5.4e0	<	1.1e2	<	1.9e-6	<	1.5e-5
1,2,4,5-Tetrachlorobenzene	<	2.5e0	<	3.5e0	<	3.5e0	<	7.2e1	<	1.2e-6	<	9.6e-6
1,2,4-Trichlorobenzene	<	2.7e0	<	3.8e0	<	3.8e0	<	7.9e1	<	1.3e-6	<	1.0e-5
2,4,5-Trichlorophenol	<	5.6e0	<	7.9e0	<	8.0e0	<	1.6e2	<	2.7e-6	<	2.2e-5
2,4,6-Trichlorophenol	<	3.6e0	<	5.1e0	<	5.1e0	<	1.1e2	<	1.8e-6	<	1.4e-5
TICs												
Furan, 2,5-dimethyl-	N,J,M	3.2e0	N,J,M	4.4e0	N,J,M	4.5e0	N,J,M	9.2e1	N,J,M	1.5e-6	N,J,M	1.2e-5
3-Hexanone	N,J,M	4.3e1	N,J,M	6.0e1	N,J,M	6.1e1	N,J,M	1.2e3	N,J,M	2.1e-5	N,J,M	1.6e-4
2-Hexanone	N,J,M	5.2e1	N,J,M	7.3e1	N,J,M	7.4e1	N,J,M	1.5e3	N,J,M	2.5e-5	N,J,M	2.0e-4
Octane, 3-methyl-	N,J,M	1.8e0	N,J,M	2.5e0	N,J,M	2.5e0	N,J,M	5.2e1	N,J,M	8.6e-7	N,J,M	6.9e-6
Benzaldehyde	N,J,M	2.5e2	N,J,M	3.5e2	N,J,M	3.5e2	N,J,M	7.2e3	N,J,M	1.2e-4	N,J,M	9.6e-4
Dodecane	N,J,M	1.5e1	N,J,M	2.1e1	N,J,M	2.1e1	N,J,M	4.4e2	N,J,M	7.3e-6	N,J,M	5.8e-5
Tridecane	N,J,M	4.5e0	N,J,M	6.3e0	N,J,M	6.4e0	N,J,M	1.3e2	N,J,M	2.2e-6	N,J,M	1.7e-5
Tetradecane	N,J,M	1.9e0	N,J,M	2.7e0	N,J,M	2.8e0	N,J,M	5.6e1	N,J,M	9.4e-7	N,J,M	7.5e-6
Pentadecane	N,J,M	3.4e0	N,J,M	4.7e0	N,J,M	4.8e0	N,J,M	9.8e1	N,J,M	1.6e-6	N,J,M	1.3e-5
Phosphoric acid tributyl ester	N,J,M	5.2e0	N,J,M	7.3e0	N,J,M	7.4e0	N,J,M	1.5e2	N,J,M	2.5e-6	N,J,M	2.0e-5
Cyclododecane	N,J,M	7.0e0	N,J,M	9.8e0	N,J,M	9.9e0	N,J,M	2.0e2	N,J,M	3.4e-6	N,J,M	2.7e-5
Heptadecane	N,J,M	2.0e0	N,J,M	2.8e0	N,J,M	2.8e0	N,J,M	5.8e1	N,J,M	9.7e-7	N,J,M	7.7e-6
Eicosane	N,J,M	1.4e0	N,J,M	1.9e0	N,J,M	2.0e0	N,J,M	4.0e1	N,J,M	6.7e-7	N,J,M	5.3e-6
Hexadecanoic acid	N,J,M	1.2e0	N,J,M	1.7e0	N,J,M	1.7e0	N,J,M	3.5e1	N,J,M	5.9e-7	N,J,M	4.7e-6
Octadecanoic acid	N,J,M	8.1e-1	N,J,M	1.1e0	N,J,M	1.2e0	N,J,M	2.4e1	N,J,M	3.9e-7	N,J,M	3.1e-6
Phosphine oxide, triphenyl-	N,J,M	2.0e0	N,J,M	2.8e0	N,J,M	2.8e0	N,J,M	5.7e1	N,J,M	9.5e-7	N,J,M	7.6e-6
Heneicosane	N,J,M	4.5e-1	N,J,M	6.3e-1	N,J,M	6.4e-1	N,J,M	1.3e1	N,J,M	2.2e-7	N,J,M	1.7e-6
Tetratetracontane	N,J,M	1.5e0	N,J,M	2.1e0	N,J,M	2.1e0	N,J,M	4.3e1	N,J,M	7.2e-7	N,J,M	5.7e-6
Heptane, 2,5-dimethyl-												
Heptane, 2,3-dimethyl-												
Benzaldehyde, ethyl-												
Octodecane												
Nonacosane												
Hexatriacontane												
Tetracosane												
Tetratriacontane												

Table B-2. SVOC-END-1.

SVOC SAMPLING DATA SHEET FOR HLLWE TESTS

Site:	HLLWE Offgas Tie-in	Sampling Location:	MAN-OFG-73	Nozzle No.:	2-01	Est. DP:	0.14	Est. Tstack, °F:	133
Project:	01-1062-01-0866	Duct ID, inches:	12	Nozzle Size, in.:	0.3140	Est. K:	7.67	Est. vs, ft/s:	25.0
Date:	6/18/2001	Static Pressure, in. WG:	-17.5	Pitot No.:	JM-2	Est. DH:	1.07	Operator(s):	FE/RW
Run No.:	0010-END-1	Est. O2, %:	20.5	Pitot Coeff.:	0.84	Est. DGM Temperature, °F			80
Run Type:	test	Est CO2, %:	0	Meter Box No.	2	**Meter Box Leak Checks:**		Pitot:	pass
Pbar., in. Hg:	25.176	Est. Moist., %:	1.3%	ΔH@:	1.5673	Pretest	0.001 cfm @	15.5	in. Hg
Tambient, °F:	70	Impinger Box No.:	9	Y-factor:	1.0328			Pitot: pass	
DGM vol. Goal (m^3):	3.00	DGM vol. Goal (ft^3):	127.080	Min. ending DGM vol. (ft^3):	486.849	Post-test	0.000 cfm @	8	in. Hg

Sampling Time (min.)	Clock Time (24hr)	Velocity ΔP (in. WG)	Meter ΔH (in. WG)	Meter Volume (cubic feet)	TEMPERATURE (°F)							Pump Vacuum (in. Hg)	%I	COMMENTS
					Heated Line	Stack	Meter In	Meter Out	Filter	Impinger Exit	Aux. (XAD)			
0	15:00	0.14	1.30	359.769	257	132	84	75	262	50	52	7.9	-	O2=20.5
10	15:10	0.14	1.30	366.680	257	132	88	76	263	44	51	7.9	104	O2=20.5
20	15:20	0.14	1.25	373.830	257	131	90	78	262	46	51	7.5	107	O2=20.5
30	15:30	0.14	1.25	380.845	252	131	91	79	261	47	51	7.5	105	O2=20.5
40	15:40	0.14	1.25	387.920	255	131	93	80	262	47	52	7.5	105	O2=20.5
50	15:50	0.14	1.25	395.020	250	131	94	81	262	48	52	7.5	105	O2=20.5
60	16:00	0.14	1.25	402.150	249	131	94	82	261	48	53	7.5	106	O2=20.5
70	16:10	0.14	1.25	409.290	249	131	95	82	261	47	51	7.5	106	O2=20.6
80	16:20	0.14	1.25	416.870	249	131	95	82	261	46	50	7.6	112	O2=20.5
90	16:30	0.14	1.25	423.600	249	131	95	82	262	46	50	7.5	100	O2=20.6
100	16:40	0.14	1.25	430.740	249	131	95	83	261	46	50	7.5	106	O2=20.5
110	16:50	0.14	1.25	437.900	249	131	95	83	262	46	51	7.6	106	O2=20.6
120	17:00	0.14	1.25	445.075	249	131	95	83	262	46	51	7.5	106	O2=20.5
130	17:10	0.14	1.25	452.200	249	131	95	83	260	46	52	7.5	105	O2=20.5
140	17:20	0.14	1.25	459.330	249	131	95	83	261	47	52	7.5	106	O2=20.5
150	17:30	0.14	1.25	466.570	249	131	95	82	260	47	52	7.5	107	O2=20.5
160	17:40	0.14	1.25	473.610	249	131	95	82	260	47	51	7.5	104	O2=20.5
170	17:50	0.14	1.25	480.770	249	131	94	82	260	46	51	7.5	106	O2=20.5
180	18:00	0.14	1.25	487.903	249	131	94	82	261	46	50	7.5	106	O2=20.6
Total	Total	ΔP_{avg}	Average	Total	Average Temperatures (°F)							Max.	Ave. %I	
180	3:00	0.140	1.26	128.134	251	131	93	81	261	47	51	7.9	106	Avg. O2=20.5

Table B-2. SVOC-END-1.

0010 CONFIGURATION TRAIN COMPONENT DATA SHEET
for HLLWE OFFGAS SAMPLING

Site: HLLWE Offgas Tie-in

Date: 6/18/2001

Run No.: 0010-END-1

Impinger Box no.: 9

XAD trap Quanterra No.: **A-3405**

Component:	XAD	KO-1	Imp-1	Imp-2	Acid Scrub Section			
Type:	trap	short stem	modified	G-S	short stem	modified	modified	
Reagent:	XAD-2	None	Organics free water		None	**2N** NaOH	Silica Gel	
Nominal Contents:	20 - 40g, dry	Empty	100 mL	100 mL	Empty	**100** mL	300-400g	
Post-test Wt., g:	301.4	534.9	686.9	691.5	574.2	731.0	802.8	Impinger Wt. Gain
Pre-test Wt., g:	300.7	532.0	687.8	691.1	572.8	730.7	781.2	
Wt. Gain, g:	0.7	2.9	-0.9	0.4	1.4	0.3	21.6	26.4
Post-test Volume:		0.0	100.0	100.0	0.0			Impinger Vol. Gain
Pre-test Volume:		0.0	100.0	100.0	0.0			
Volume Gain:		0.0	0.0	0.0	0.0			0.0
Post-test pH:			6.0	6.0		14.0		

Filter Lot # STL-A4023 OF water Lot # QCLAB-1 NaOH Lot # QCLAB-381

O2% 20.6

CO2% 0.0

Record impinger change-out and other important information below:

Table B-2. SVOC-END-1.

FIELD DATA CALCULATIONS

Project: 01-1062-01-0866 Run Date: 6/18/2001 Run Identification: 0010-END-1			
PARAMETER	SYMBOL	UNITS	
Absolute Pressure in the Duct	Pabs	in. Hg	23.889
Average Duct Gas Temperature	Ts	R	591
Average Meter Temperature	Tm	R	547
Average Gas Oxygen Content	Co2,m	%	20.6
Average Gas Carbon Dioxide Content	Cco2,m	%	0.0
Total Impinger Weight Gain (water)	Ww	grams	26.4
Nozzle Area	An	ft^2	0.000538
Duct Area	As	ft^2	0.7854
Sample Volume	VmStd	dscf	107.847
Sample Volume (SI)	VmStdm	dscm	3.054
Average Sampling Rate	Qm	dscf/m	0.599
Volume of Water Vapor	VwStd	scf	1.245
Volume of Water Vapor (SI)	VwStdm	scm	0.0352
Moisture Fraction	Bws	-	0.011
Dry Gas Molecular Weight	Md	g/g-mol	28.82
Wet Gas Molecular Weight	Ms	g/g-mol	28.70
Gas Velocity at Nozzle	vn	ft/s	24.9
Gas Velocity at Nozzle (SI)	vnm	m/s	7.60
Average Gas Velocity	vncor	ft/s	21.05
Dry Offgas Flow Rate	Qsd	dscf/h	41,960
Dry Offgas Flow Rate (SI)	Qsdm	dscm/h	1,188.2
Actual Offgas Flow Rate	Q	acf/h	59,517
Intermediate Isokinetic Rate	Ii	%	105.8
Final Isokinetic Rate	**I**	**%**	**105.6**

Table B-2. SVOC-END-1

Project:	01-1062-01-0866
Run Date:	6/18/2001
Run Identification:	0010-END-1
Run Type:	test
Lab Report Date:	8/28/2001
Lab Report Status: (preliminary or final)	Final

RESULTS

• without blank corrections

• final presentation should be rounded to two significant digits

	CONCENTRATIONS			MASS FLOW RATES		
	Actual (µg/acm)	Standard (µg/scm)	Dry Standard (µg/dscm)	µg/min	grams/sec	lb/h
Acenaphthene	< 2.3e0	< 3.2e0	< 3.2e0	< 6.4e1	< 1.1e-6	< 8.4e-6
Acenaphthylene	< 2.2e0	< 3.1e0	< 3.1e0	< 6.2e1	< 1.0e-6	< 8.1e-6
Acetophenone	<,J 8.3e0	<,J 1.2e1	<,J 1.2e1	<,J 2.3e2	<,J 3.9e-6	<,J 3.1e-5
Aniline	< 2.5e1	< 3.6e1	< 3.6e1	< 7.1e2	< 1.2e-5	< 9.4e-5
Anthracene	< 2.2e0	< 3.1e0	< 3.1e0	< 6.2e1	< 1.0e-6	< 8.1e-6
Benzidine	< 1.5e2	< 2.2e2	< 2.2e2	< 4.3e3	< 7.2e-5	< 5.7e-4
Benzoic acid	<,E 6.0e2	<,E 8.4e2	<,E 8.5e2	<,E 1.7e4	<,E 2.8e-4	<,E 2.2e-3
Benzo(a)anthracene	< 2.8e0	< 3.9e0	< 3.9e0	< 7.8e1	< 1.3e-6	< 1.0e-5
Benzo(a)pyrene	< 3.0e1	< 4.2e1	< 4.3e1	< 8.4e2	< 1.4e-5	< 1.1e-4
Benzo(b)fluoranthene	< 6.9e1	< 9.7e1	< 9.8e1	< 1.9e3	< 3.2e-5	< 2.6e-4
Benzo(g,h,i)perylene	< 3.9e1	< 5.5e1	< 5.6e1	< 1.1e3	< 1.8e-5	< 1.5e-4
Benzo(k)fluoranthene	< 9.9e1	< 1.4e2	< 1.4e2	< 2.8e3	< 4.6e-5	< 3.7e-4
Benzyl alcohol	< 1.3e2	< 1.8e2	< 1.9e2	< 3.7e3	< 6.2e-5	< 4.9e-4
bis(2-Chloroethoxy)methane	< 2.3e0	< 3.2e0	< 3.3e0	< 6.5e1	< 1.1e-6	< 8.6e-6
bis(2-Chloroethyl)ether	< 2.5e0	< 3.6e0	< 3.6e0	< 7.1e1	< 1.2e-6	< 9.4e-6
bis(2-Ethylhexyl)phthalate	< 5.1e1	< 7.1e1	< 7.2e1	< 1.4e3	< 2.4e-5	< 1.9e-4
4-Bromophenyl-phenylether	< 2.2e0	< 3.0e0	< 3.1e0	< 6.1e1	< 1.0e-6	< 8.1e-6
Butylbenzylphthalate	< 3.0e0	< 4.2e0	< 4.3e0	< 8.4e1	< 1.4e-6	< 1.1e-5
Carbazole	< 3.0e0	< 4.2e0	< 4.3e0	< 8.4e1	< 1.4e-6	< 1.1e-5
4-Chloro-3-methylphenol	< 3.9e0	< 5.5e0	< 5.6e0	< 1.1e2	< 1.8e-6	< 1.5e-5
4-Chloroaniline	< 2.1e1	< 2.9e1	< 2.9e1	< 5.8e2	< 9.7e-6	< 7.7e-5
2-Chloronaphthalene	< 2.1e0	< 3.0e0	< 3.0e0	< 6.0e1	< 1.0e-6	< 8.0e-6
2-Chlorophenol	< 2.5e0	< 3.6e0	< 3.6e0	< 7.1e1	< 1.2e-6	< 9.4e-6
4-Chlorophenyl phenyl ether	< 2.5e0	< 3.6e0	< 3.6e0	< 7.1e1	< 1.2e-6	< 9.4e-6
Chrysene	< 2.8e0	< 3.9e0	< 3.9e0	< 7.8e1	< 1.3e-6	< 1.0e-5
Di-n-butylphthalate	<,J 2.3e1	<,J 3.2e1	<,J 3.3e1	<,J 6.5e2	<,J 1.1e-5	<,J 8.6e-5
Di-n-octylphthalate	<,J 3.7e1	<,J 5.2e1	<,J 5.2e1	<,J 1.0e3	<,J 1.7e-5	<,J 1.4e-4
Dibenz(a,h)anthracene	< 3.9e1	< 5.5e1	< 5.6e1	< 1.1e3	< 1.8e-5	< 1.5e-4
Dibenzofuran	< 2.5e0	< 3.6e0	< 3.6e0	< 7.1e1	< 1.2e-6	< 9.4e-6
1,2-Dichlorobenzene	< 2.5e0	< 3.6e0	< 3.6e0	< 7.1e1	< 1.2e-6	< 9.4e-6
1,3-Dichlorobenzene	< 2.8e0	< 3.9e0	< 3.9e0	< 7.8e1	< 1.3e-6	< 1.0e-5
1,4-Dichlorobenzene	J 4.4e0	J 6.2e0	J 6.2e0	J 1.2e2	J 2.1e-6	J 1.6e-5
3,3'-Dichlorobenzidine	< 2.5e1	< 3.6e1	< 3.6e1	< 7.1e2	< 1.2e-5	< 9.4e-5
2,4-Dichlorophenol	< 3.0e0	< 4.2e0	< 4.3e0	< 8.4e1	< 1.4e-6	< 1.1e-5
Diethylphthalate	< 3.5e0	< 4.9e0	< 4.9e0	< 9.7e1	< 1.6e-6	< 1.3e-5
Dimethyl phthalate	< 2.2e0	< 3.1e0	< 3.1e0	< 6.2e1	< 1.0e-6	< 8.2e-6
2,4-Dimethylphenol	< 1.4e1	< 1.9e1	< 1.9e1	< 3.8e2	< 6.4e-6	< 5.1e-5
4,6-Dinitro-2-methylphenol	< 3.0e1	< 4.2e1	< 4.3e1	< 8.4e2	< 1.4e-5	< 1.1e-4
2,4-Dinitrophenol	< 6.2e1	< 8.7e1	< 8.8e1	< 1.8e3	< 2.9e-5	< 2.3e-4
2,4-Dinitrotoluene	< 3.0e0	< 4.2e0	< 4.3e0	< 8.4e1	< 1.4e-6	< 1.1e-5
2,6-Dinitrotoluene	< 2.8e0	< 3.9e0	< 3.9e0	< 7.8e1	< 1.3e-6	< 1.0e-5
1,2-Diphenylhydrazine	< 2.3e0	< 3.2e0	< 3.2e0	< 6.4e1	< 1.1e-6	< 8.4e-6
Fluoranthene	< 2.3e0	< 3.2e0	< 3.3e0	< 6.5e1	< 1.1e-6	< 8.6e-6
Fluorene	< 2.3e0	< 3.2e0	< 3.3e0	< 6.5e1	< 1.1e-6	< 8.6e-6
Hexachlorocyclopentadiene	< 3.7e1	< 5.2e1	< 5.2e1	< 1.0e3	< 1.7e-5	< 1.4e-4
Hexachlorobenzene	< 2.5e0	< 3.6e0	< 3.6e0	< 7.1e1	< 1.2e-6	< 9.4e-6
Hexachlorobutadiene	< 3.5e0	< 4.9e0	< 4.9e0	< 9.7e1	< 1.6e-6	< 1.3e-5
Hexachloroethane	< 3.7e0	< 5.2e0	< 5.2e0	< 1.0e2	< 1.7e-6	< 1.4e-5
Indeno(1,2,3-cd)pyrene	< 3.5e1	< 4.9e1	< 4.9e1	< 9.7e2	< 1.6e-5	< 1.3e-4
Isophorone	< 2.3e0	< 3.2e0	< 3.3e0	< 6.5e1	< 1.1e-6	< 8.6e-6
2-Methylnaphthalene	< 2.3e0	< 3.2e0	< 3.3e0	< 6.5e1	< 1.1e-6	< 8.6e-6
2-Methylphenol	< 1.1e1	< 1.5e1	< 1.5e1	< 3.0e2	< 5.1e-6	< 4.0e-5
3-Methylphenol & 4-Methylphenol	< 7.8e0	< 1.1e1	< 1.1e1	< 2.2e2	< 3.7e-6	< 2.9e-5
N-Nitroso-di-n-propylamine	< 2.5e0	< 3.6e0	< 3.6e0	< 7.1e1	< 1.2e-6	< 9.4e-6
N-Nitrosodimethylamine	< 2.5e0	< 3.6e0	< 3.6e0	< 7.1e1	< 1.2e-6	< 9.4e-6
N-Nitrosodiphenylamine	< 3.5e0	< 4.9e0	< 4.9e0	< 9.7e1	< 1.6e-6	< 1.3e-5
Naphthalene	< 2.5e0	< 3.6e0	< 3.6e0	< 7.1e1	< 1.2e-6	< 9.4e-6
2-Nitroaniline	< 2.5e0	< 3.6e0	< 3.6e0	< 7.1e1	< 1.2e-6	< 9.4e-6
3-Nitroaniline	< 9.5e0	< 1.3e1	< 1.3e1	< 2.7e2	< 4.4e-6	< 3.5e-5
4-Nitroaniline	< 8.3e0	< 1.2e1	< 1.2e1	< 2.3e2	< 3.9e-6	< 3.1e-5
Nitrobenzene	<,J 3.5e0	<,J 4.9e0	<,J 4.9e0	<,J 9.7e1	<,J 1.6e-6	<,J 1.3e-5
2-Nitrophenol	<,J 9.5e0	<,J 1.3e1	<,J 1.3e1	<,J 2.7e2	<,J 4.4e-6	<,J 3.5e-5
4-Nitrophenol	< 1.3e1	< 1.8e1	< 1.8e1	< 3.6e2	< 5.9e-6	< 4.7e-5
2,2'-Oxybis(1-chloropropane)	< 3.2e0	< 4.5e0	< 4.6e0	< 9.1e1	< 1.5e-6	< 1.2e-5

Table B-2. SVOC-END-1.

Project:	01-1062-01-0866
Run Date:	6/18/2001
Run Identification:	0010-END-1
Run Type:	test
Lab Report Date:	8/28/2001
Lab Report Status: (preliminary or final)	Final

RESULTS

• without blank corrections

• final presentation should be rounded to two significant digits

	CONCENTRATIONS						MASS FLOW RATES					
	Actual (µg/acm)		Standard (µg/scm)		Dry Standard (µg/dscm)		µg/min		grams/sec		lb/h	
Pentachlorobenzene	<	2.3e0	<	3.2e0	<	3.3e0	<	6.5e1	<	1.1e-6	<	8.6e-6
Pentachloronitrobenzene	<	2.5e0	<	3.6e0	<	3.6e0	<	7.1e1	<	1.2e-6	<	9.4e-6
Pentachlorophenol	<	6.9e1	<	9.7e1	<	9.8e1	<	1.9e3	<	3.2e-5	<	2.6e-4
Phenanthrene	<	2.3e0	<	3.2e0	<	3.2e0	<	6.4e1	<	1.1e-6	<	8.4e-6
Phenol	<,J	8.5e0	<,J	1.2e1	<,J	1.2e1	<,J	2.4e2	<,J	4.0e-6	<,J	3.2e-5
Pyrene	<	2.3e0	<	3.2e0	<	3.3e0	<	6.5e1	<	1.1e-6	<	8.6e-6
Pyridine	<	3.9e0	<	5.5e0	<	5.6e0	<	1.1e2	<	1.8e-6	<	1.5e-5
1,2,4,5-Tetrachlorobenzene	<	2.5e0	<	3.6e0	<	3.6e0	<	7.1e1	<	1.2e-6	<	9.4e-6
1,2,4-Trichlorobenzene	<	2.8e0	<	3.9e0	<	3.9e0	<	7.8e1	<	1.3e-6	<	1.0e-5
2,4,5-Trichlorophenol	<	5.8e0	<	8.1e0	<	8.2e0	<	1.6e2	<	2.7e-6	<	2.1e-5
2,4,6-Trichlorophenol	<	3.7e0	<	5.2e0	<	5.2e0	<	1.0e2	<	1.7e-6	<	1.4e-5
TICs												
Furan, 2,5-dimethyl-	N,J,M	1.8e0	N,J,M	2.5e0	N,J,M	2.6e0	N,J,M	5.1e1	N,J,M	8.4e-7	N,J,M	6.7e-6
3-Hexanone	N,J,M	2.2e1	N,J,M	3.1e1	N,J,M	3.1e1	N,J,M	6.2e2	N,J,M	1.0e-5	N,J,M	8.2e-5
2-Hexanone	N,J,M	2.8e1	N,J,M	3.9e1	N,J,M	3.9e1	N,J,M	7.8e2	N,J,M	1.3e-5	N,J,M	1.0e-4
Heptane, 2,3-dimethyl-	N,J,M	2.3e0	N,J,M	3.2e0	N,J,M	3.2e0	N,J,M	6.4e1	N,J,M	1.1e-6	N,J,M	8.5e-6
Benzaldehyde	N,J,M	1.7e2	N,J,M	2.4e2	N,J,M	2.4e2	N,J,M	4.8e3	N,J,M	8.0e-5	N,J,M	6.3e-4
Formic acid, phenylmethyl ester	N,J,M	1.7e1	N,J,M	2.3e1	N,J,M	2.4e1	N,J,M	4.7e2	N,J,M	7.8e-6	N,J,M	6.2e-5
Benzaldehyde, 4-ethyl-	N,J,M	1.3e1	N,J,M	1.8e1	N,J,M	1.9e1	N,J,M	3.7e2	N,J,M	6.2e-6	N,J,M	4.9e-5
Dodecane	N,J,M	1.1e1	N,J,M	1.6e1	N,J,M	1.6e1	N,J,M	3.1e2	N,J,M	5.2e-6	N,J,M	4.1e-5
Tridecane	N,J,M	4.8e0	N,J,M	6.8e0	N,J,M	6.9e0	N,J,M	1.4e2	N,J,M	2.3e-6	N,J,M	1.8e-5
2,4-Hexadiene	N,J,M	3.7e1	N,J,M	5.2e1	N,J,M	5.2e1	N,J,M	1.0e3	N,J,M	1.7e-5	N,J,M	1.4e-4
Tetradecane	N,J,M	2.2e1	N,J,M	3.1e1	N,J,M	3.1e1	N,J,M	6.2e2	N,J,M	1.0e-5	N,J,M	8.2e-5
Phosphoric acid tributyl ester	N,J,M	3.7e0	N,J,M	5.2e0	N,J,M	5.2e0	N,J,M	1.0e2	N,J,M	1.7e-6	N,J,M	1.4e-5
Cyclododecane	N,J,M	6.9e0	N,J,M	9.7e0	N,J,M	9.8e0	N,J,M	1.9e2	N,J,M	3.2e-6	N,J,M	2.6e-5
Heptadecane	N,J,M	9.2e-1	N,J,M	1.3e0	N,J,M	1.3e0	N,J,M	2.6e1	N,J,M	4.3e-7	N,J,M	3.4e-6
Octadecanoic acid	N,J,M	4.6e-1	N,J,M	6.5e-1	N,J,M	6.5e-1	N,J,M	1.3e1	N,J,M	2.2e-7	N,J,M	1.7e-6
Heptane, 2,5-dimethyl-												
Benzoic acid, methyl ester												
Benzaldehyde, ethyl-												
Pentadecane												
Eicosane												
Heneicosane												
Octodecane												
Phosphine oxide, triphenyl-												
Nonacosane												
Hexatriacontane												
Tetracosane												
Tetratriacontane												

Table B-3. SVOC-STRT-2.

SVOC SAMPLING DATA SHEET FOR HLLWE TESTS

Site:	HLLWE Offgas Tie-in	Sampling Location:	MAN-OFG-73	Nozzle No.:	2-01	Est. DP:	0.16	Est. Tstack, °F:	133
Project:	01-1062-01-0866	Duct ID, inches:	12	Nozzle Size, in.:	0.3140	Est. K:	6.53	Est. vs, ft/s:	26.8
Date:	6/19/2001	Static Pressure, in. WG:	-17.5	Pitot No.:	JM-2	Est. DH:	1.04	Operator(s):	FE/RW
Run No.:	0010-STRT-2	Est. O2, %:	20.5	Pitot Coeff.:	0.84	Est. DGM Temperature, °F			
Run Type:	Test	Est CO2, %:	0	Meter Box No.	2	**Meter Box Leak Checks:**		Pitot:	pass
Pbar., in. Hg:	25.092	Est. Moist., %:	1.3%	$\Delta H@$:	1.5673	Pretest	0.003 cfm @	15	in. Hg
Tambient, °F:	60	Impinger Box No.:	4	Y-factor:	1.0328			Pitot:	pass
DGM vol. Goal (m^3):	3.00	DGM vol. Goal (ft^3):	127.080	Min. ending DGM vol. (ft^3):	615.228	Post-test	0.000 cfm @	6	in. Hg

Sampling Time (min.)	Clock Time (24hr)	Velocity ΔP (in. WG)	Meter ΔH (in. WG)	Meter Volume (cubic feet)	TEMPERATURE (°F) Heated Line	Stack	Meter In	Meter Out	Filter	Impinger Exit	Aux. (XAD)	Pump Vacuum (in. Hg)	%I	COMMENTS
0	8:00	0.16	1.30	488.148	267	132	62	53	262	46	48	6.0	-	
10	8:10	0.16	1.30	494.990	270	133	69	53	263	43	46	6.0	100	
20	8:20	0.16	1.30	501.989	273	133	73	59	267	44	47	6.0	101	
30	8:30	0.16	1.30	508.995	273	132	75	61	262	44	47	6.0	101	
40	8:40	0.16	1.30	515.900	271	132	77	63	269	45	47	6.0	99	
50	8:50	0.16	1.30	523.020	271	132	79	65	263	45	47	6.0	102	
60	9:00	0.16	1.30	530.080	270	132	80	66	264	46	48	6.0	101	
70	9:10	0.16	1.30	537.101	271	132	81	68	264	46	48	6.0	100	
80	9:20	0.16	1.30	544.260	270	132	82	69	262	47	48	6.0	102	
90	9:30	0.16	1.30	551.510	271	132	83	70	262	47	48	6.0	103	
100	9:40	0.16	1.30	558.270	272	132	84	71	262	48	50	6.0	96	
110	9:50	0.16	1.30	565.420	271	132	85	72	263	48	50	6.0	101	
120	10:00	0.16	1.30	572.570	271	132	85	72	263	48	51	6.0	101	
130	10:10	0.16	1.30	579.710	269	132	86	73	263	49	53	6.0	101	
140	10:20	0.16	1.30	586.860	270	132	87	74	263	49	53	6.0	100	
150	10:30	0.16	1.30	593.900	271	132	87	74	264	50	56	6.0	99	
160	10:40	0.16	1.30	601.150	269	132	88	75	264	50	57	6.0	102	
170	10:50	0.16	1.30	608.300	271	132	88	76	262	50	59	6.0	100	
180	11:00	0.16	1.30	615.462	270	132	89	76	262	51	61	6.0	100	
Total	Total	ΔP_{avg}	Average	Total	Average Temperatures (°F)							Max.	Ave. %I	
180	3:00	0.160	1.30	127.314	271	132	81	68	263	47	51	6.0	100	

Table B-3. SVOC-STRT-2.

0010 CONFIGURATION TRAIN COMPONENT DATA SHEET
for HLLWE OFFGAS SAMPLING

Site: HLLWE Offgas Tie-in

Date: 6/19/2001

Run No.: 0010-STRT-2

Impinger Box no.: 4

XAD trap Quanterr **A-3374**

Component:	XAD	KO-1	Imp-1	Imp-2	Acid Scrub Section		
Type:	trap	short stem	modified	G-S	short stem	modified	modified
Reagent:	XAD-2	None	Organics free water		None	**2N** NaOH	Silica Gel
Nominal Contents:	20 - 40g, dry	Empty	100 mL	100 mL	Empty	**100** mL	300-400g
Post-test Wt., g:	288.7	548.8	696.5	683.4	536.1	730.9	837.6
Pre-test Wt., g:	288.5	546.3	698.3	683.7	535.0	733.5	813.2
Wt. Gain, g:	0.2	2.5	-1.8	-0.3	1.1	-2.6	24.4
Post-test Volume:		0.0	100.0	100.0	0.0		
Pre-test Volume:		0.0	100.0	100.0	0.0		
Volume Gain:		0.0	0.0	0.0	0.0		
Post-test pH:			6.0	6.0		13.0	

Impinger Wt. Gain
23.5

Impinger Vol. Gain
0.0

Filter Lot # STL-A4023 OF water Lot # QCLAB-1 NaOH Lot # 000381

O2% 20.6

CO2% 0.0

Record impinger change-out and other important information below:

Table B-3. SVOC-STRT-2.

FIELD DATA CALCULATIONS

Project:	01-1062-01-0866		
Run Date:	6/19/2001		
Run Identification:	0010-STRT-2		
PARAMETER	SYMBOL	UNITS	
Absolute Pressure in the Duct	Pabs	in. Hg	23.805
Average Duct Gas Temperature	Ts	R	592
Average Meter Temperature	Tm	R	534
Average Gas Oxygen Content	Co2,m	%	20.6
Average Gas Carbon Dioxide Content	Cco2,m	%	0.0
Total Impinger Weight Gain (water)	Ww	grams	23.5
Nozzle Area	An	ft^2	0.000538
Duct Area	As	ft^2	0.7854
Sample Volume	VmStd	dscf	109.351
Sample Volume (SI)	VmStdm	dscm	3.096
Average Sampling Rate	Qm	dscf/m	0.608
Volume of Water Vapor	VwStd	scf	1.108
Volume of Water Vapor (SI)	VwStdm	scm	0.0314
Moisture Fraction	Bws	-	0.010
Dry Gas Molecular Weight	Md	g/g-mol	28.82
Wet Gas Molecular Weight	Ms	g/g-mol	28.72
Gas Velocity at Nozzle	vn	ft/s	26.7
Gas Velocity at Nozzle (SI)	vnm	m/s	8.15
Average Gas Velocity	vncor	ft/s	22.56
Dry Offgas Flow Rate	Qsd	dscf/h	44,791
Dry Offgas Flow Rate (SI)	Qsdm	dscm/h	1,268.3
Actual Offgas Flow Rate	Q	acf/h	63,775
Intermediate Isokinetic Rate	Ii	%	100.6
Final Isokinetic Rate	**I**	**%**	**100.3**

Table B-3. SVOC-STRT-2.

Project:	01-1062-01-0866
Run Date:	6/19/2001
Run Identification:	0010-STRT-2
Run Type:	Test
Lab Report Date:	8/28/2001
Lab Report Status: (preliminary or final)	Final

RESULTS

• without blank corrections

• final presentation should be rounded to two significant digits

	CONCENTRATIONS						MASS FLOW RATES					
	Actual (µg/acm)		Standard (µg/scm)		Dry Standard (µg/dscm)		µg/min		grams/sec		lb/h	
Acenaphthene	<,J	3.6e0	<,J	5.1e0	<,J	5.2e0	<,J	1.1e2	<,J	1.8e-6	<,J	1.4e-5
Acenaphthylene	<,J	3.6e0	<,J	5.1e0	<,J	5.2e0	<,J	1.1e2	<,J	1.8e-6	<,J	1.4e-5
Acetophenone	<,J	9.5e0	<,J	1.3e1	<,J	1.4e1	<,J	2.9e2	<,J	4.8e-6	<,J	3.8e-5
Aniline	<	3.4e1	<	4.8e1	<	4.8e1	<	1.0e3	<	1.7e-5	<	1.4e-4
Anthracene	<,J	3.6e0	<,J	5.1e0	<,J	5.2e0	<,J	1.1e2	<,J	1.8e-6	<,J	1.4e-5
Benzidine	<	1.8e2	<	2.6e2	<	2.6e2	<	5.5e3	<	9.1e-5	<	7.2e-4
Benzoic acid	E	5.2e2	E	7.4e2	E	7.4e2	E	1.6e4	E	2.6e-4	E	2.1e-3
Benzo(a)anthracene	<,J	4.3e0	<,J	6.1e0	<,J	6.1e0	<,J	1.3e2	<,J	2.2e-6	<,J	1.7e-5
Benzo(a)pyrene	<,J	3.2e1	<,J	4.5e1	<,J	4.5e1	<,J	9.6e2	<,J	1.6e-5	<,J	1.3e-4
Benzo(b)fluoranthene	<,J	6.8e1	<,J	9.6e1	<,J	9.7e1	<,J	2.0e3	<,J	3.4e-5	<,J	2.7e-4
Benzo(g,h,i)perylene	<,J	4.1e1	<,J	5.8e1	<,J	5.8e1	<,J	1.2e3	<,J	2.0e-5	<,J	1.6e-4
Benzo(k)fluoranthene	<,J	9.8e1	<,J	1.4e2	<,J	1.4e2	<,J	2.9e3	<,J	4.9e-5	<,J	3.9e-4
Benzyl alcohol	<	1.3e2	<	1.8e2	<	1.8e2	<	3.9e3	<	6.5e-5	<	5.1e-4
bis(2-Chloroethoxy)methane	<	3.2e0	<	4.5e0	<	4.5e0	<	9.6e1	<	1.6e-6	<	1.3e-5
bis(2-Chloroethyl)ether	<,J	3.6e0	<,J	5.1e0	<,J	5.2e0	<,J	1.1e2	<,J	1.8e-6	<,J	1.4e-5
bis(2-Ethylhexyl)phthalate	<,J	2.9e1	<,J	4.2e1	<,J	4.2e1	<,J	8.9e2	<,J	1.5e-5	<,J	1.2e-4
4-Bromophenyl-phenylether	<,J	4.1e0	<,J	5.8e0	<,J	5.8e0	<,J	1.2e2	<,J	2.0e-6	<,J	1.6e-5
Butylbenzylphthalate	<,J	4.3e0	<,J	6.1e0	<,J	6.1e0	<,J	1.3e2	<,J	2.2e-6	<,J	1.7e-5
Carbazole	<,J	4.1e0	<,J	5.8e0	<,J	5.8e0	<,J	1.2e2	<,J	2.0e-6	<,J	1.6e-5
4-Chloro-3-methylphenol	<,J	7.0e0	<,J	9.9e0	<,J	1.0e1	<,J	2.1e2	<,J	3.5e-6	<,J	2.8e-5
4-Chloroaniline	<	2.5e1	<	3.5e1	<	3.6e1	<	7.5e2	<	1.3e-5	<	9.9e-5
2-Chloronaphthalene	<,J	3.4e0	<,J	4.8e0	<,J	4.8e0	<,J	1.0e2	<,J	1.7e-6	<,J	1.4e-5
2-Chlorophenol	<,J	3.4e0	<,J	4.8e0	<,J	4.8e0	<,J	1.0e2	<,J	1.7e-6	<,J	1.4e-5
4-Chlorophenyl phenyl ether	<,J	3.9e0	<,J	5.4e0	<,J	5.5e0	<,J	1.2e2	<,J	1.9e-6	<,J	1.5e-5
Chrysene	<,J	4.8e0	<,J	6.7e0	<,J	6.8e0	<,J	1.4e2	<,J	2.4e-6	<,J	1.9e-5
Di-n-butylphthalate	<,J	2.5e1	<,J	3.5e1	<,J	3.6e1	<,J	7.5e2	<,J	1.3e-5	<,J	9.9e-5
Di-n-octylphthalate	<,J	3.6e1	<,J	5.1e1	<,J	5.2e1	<,J	1.1e3	<,J	1.8e-5	<,J	1.4e-4
Dibenz(a,h)anthracene	<,J	3.9e1	<,J	5.4e1	<,J	5.5e1	<,J	1.2e3	<,J	1.9e-5	<,J	1.5e-4
Dibenzofuran	<,J	3.9e0	<,J	5.4e0	<,J	5.5e0	<,J	1.2e2	<,J	1.9e-6	<,J	1.5e-5
1,2-Dichlorobenzene	<,J	3.6e0	<,J	5.1e0	<,J	5.2e0	<,J	1.1e2	<,J	1.8e-6	<,J	1.4e-5
1,3-Dichlorobenzene	<,J	3.9e0	<,J	5.4e0	<,J	5.5e0	<,J	1.2e2	<,J	1.9e-6	<,J	1.5e-5
1,4-Dichlorobenzene	J	4.5e0	J	6.4e0	J	6.5e0	J	1.4e2	J	2.3e-6	J	1.8e-5
3,3'-Dichlorobenzidine	<	2.9e1	<	4.2e1	<	4.2e1	<	8.9e2	<	1.5e-5	<	1.2e-4
2,4-Dichlorophenol	<	4.1e0	<	5.8e0	<	5.8e0	<	1.2e2	<	2.0e-6	<	1.6e-5
Diethylphthalate	<,J	5.0e0	<,J	7.0e0	<,J	7.1e0	<,J	1.5e2	<,J	2.5e-6	<,J	2.0e-5
Dimethyl phthalate	<,J	3.6e0	<,J	5.1e0	<,J	5.2e0	<,J	1.1e2	<,J	1.8e-6	<,J	1.4e-5
2,4-Dimethylphenol	<	1.4e1	<	2.0e1	<	2.0e1	<	4.2e2	<	7.1e-6	<	5.6e-5
4,6-Dinitro-2-methylphenol	<	3.2e1	<	4.5e1	<	4.5e1	<	9.6e2	<	1.6e-5	<	1.3e-4
2,4-Dinitrophenol	<	6.4e1	<	9.0e1	<	9.0e1	<	1.9e3	<	3.2e-5	<	2.5e-4
2,4-Dinitrotoluene	<,J	4.3e0	<,J	6.1e0	<,J	6.1e0	<,J	1.3e2	<,J	2.2e-6	<,J	1.7e-5
2,6-Dinitrotoluene	<,J	3.6e0	<,J	5.1e0	<,J	5.2e0	<,J	1.1e2	<,J	1.8e-6	<,J	1.4e-5
1,2-Diphenylhydrazine	<,J	3.6e0	<,J	5.1e0	<,J	5.2e0	<,J	1.1e2	<,J	1.8e-6	<,J	1.4e-5
Fluoranthene	<,J	3.9e0	<,J	5.4e0	<,J	5.5e0	<,J	1.2e2	<,J	1.9e-6	<,J	1.5e-5
Fluorene	<,J	3.6e0	<,J	5.1e0	<,J	5.2e0	<,J	1.1e2	<,J	1.8e-6	<,J	1.4e-5
Hexachlorocyclopentadiene	<	4.1e1	<	5.8e1	<	5.8e1	<	1.2e3	<	2.0e-5	<	1.6e-4
Hexachlorobenzene	<,J	3.6e0	<,J	5.1e0	<,J	5.2e0	<,J	1.1e2	<,J	1.8e-6	<,J	1.4e-5
Hexachlorobutadiene	<,J	4.5e0	<,J	6.4e0	<,J	6.5e0	<,J	1.4e2	<,J	2.3e-6	<,J	1.8e-5
Hexachloroethane	<,J	4.5e0	<,J	6.4e0	<,J	6.5e0	<,J	1.4e2	<,J	2.3e-6	<,J	1.8e-5
Indeno(1,2,3-cd)pyrene	<,J	3.4e1	<,J	4.8e1	<,J	4.8e1	<,J	1.0e3	<,J	1.7e-5	<,J	1.4e-4
Isophorone	<,J	3.6e0	<,J	5.1e0	<,J	5.2e0	<,J	1.1e2	<,J	1.8e-6	<,J	1.4e-5
2-Methylnaphthalene	<,J	3.4e0	<,J	4.8e0	<,J	4.8e0	<,J	1.0e2	<,J	1.7e-6	<,J	1.4e-5
2-Methylphenol	<	1.2e1	<	1.6e1	<	1.6e1	<	3.5e2	<	5.8e-6	<	4.6e-5
3-Methylphenol & 4-Methylphenol	<	8.8e0	<	1.2e1	<	1.3e1	<	2.7e2	<	4.4e-6	<	3.5e-5
N-Nitroso-di-n-propylamine	<	3.4e0	<	4.8e0	<	4.8e0	<	1.0e2	<	1.7e-6	<	1.4e-5
N-Nitrosodimethylamine	<,J	3.4e0	<,J	4.8e0	<,J	4.8e0	<,J	1.0e2	<,J	1.7e-6	<,J	1.4e-5
N-Nitrosodiphenylamine	<,J	4.8e0	<,J	6.7e0	<,J	6.8e0	<,J	1.4e2	<,J	2.4e-6	<,J	1.9e-5
Naphthalene	<,J	3.9e0	<,J	5.4e0	<,J	5.5e0	<,J	1.2e2	<,J	1.9e-6	<,J	1.5e-5
2-Nitroaniline	<	3.9e0	<	5.4e0	<	5.5e0	<	1.2e2	<	1.9e-6	<	1.5e-5
3-Nitroaniline	<	1.1e1	<	1.6e1	<	1.6e1	<	3.4e2	<	5.7e-6	<	4.5e-5
4-Nitroaniline	<	1.0e1	<	1.4e1	<	1.4e1	<	3.0e2	<	5.0e-6	<	4.0e-5

Table B-3. SVOC-STRT-2.

Project:	01-1062-01-0866
Run Date:	6/19/2001
Run Identification:	0010-STRT-2
Run Type:	Test
Lab Report Date:	8/28/2001
Lab Report Status: (preliminary or final)	Final

RESULTS

• without blank corrections

• final presentation should be rounded to two significant digits

	CONCENTRATIONS						MASS FLOW RATES					
	Actual (µg/acm)		Standard (µg/scm)		Dry Standard (µg/dscm)		µg/min		grams/sec		lb/h	
Nitrobenzene	<,J	4.5e0	<,J	6.4e0	<,J	6.5e0	<,J	1.4e2	<,J	2.3e-6	<,J	1.8e-5
2-Nitrophenol	<,J	8.4e0	<,J	1.2e1	<,J	1.2e1	<,J	2.5e2	<,J	4.2e-6	<,J	3.3e-5
4-Nitrophenol	<	1.4e1	<	2.0e1	<	2.0e1	<	4.3e2	<	7.2e-6	<	5.7e-5
2,2'-Oxybis(1-chloropropane)	<,J	5.0e0	<,J	7.0e0	<,J	7.1e0	<,J	1.5e2	<,J	2.5e-6	<,J	2.0e-5
Pentachlorobenzene	<	3.4e0	<	4.8e0	<	4.8e0	<	1.0e2	<	1.7e-6	<	1.4e-5
Pentachloronitrobenzene	<	3.6e0	<	5.1e0	<	5.2e0	<	1.1e2	<	1.8e-6	<	1.4e-5
Pentachlorophenol	<	7.0e1	<	9.9e1	<	1.0e2	<	2.1e3	<	3.5e-5	<	2.8e-4
Phenanthrene	<,J	3.9e0	<,J	5.4e0	<,J	5.5e0	<,J	1.2e2	<,J	1.9e-6	<,J	1.5e-5
Phenol	<,J	7.5e0	<,J	1.1e1	<,J	1.1e1	<,J	2.3e2	<,J	3.8e-6	<,J	3.0e-5
Pyrene	<,J	4.1e0	<,J	5.8e0	<,J	5.8e0	<,J	1.2e2	<,J	2.0e-6	<,J	1.6e-5
Pyridine	<	6.4e0	<	9.0e0	<	9.0e0	<	1.9e2	<	3.2e-6	<	2.5e-5
1,2,4,5-Tetrachlorobenzene	<	3.6e0	<	5.1e0	<	5.2e0	<	1.1e2	<	1.8e-6	<	1.4e-5
1,2,4-Trichlorobenzene	<,J	3.9e0	<,J	5.4e0	<,J	5.5e0	<,J	1.2e2	<,J	1.9e-6	<,J	1.5e-5
2,4,5-Trichlorophenol	<	6.6e0	<	9.3e0	<	9.4e0	<	2.0e2	<	3.3e-6	<	2.6e-5
2,4,6-Trichlorophenol	<	4.8e0	<	6.7e0	<	6.8e0	<	1.4e2	<	2.4e-6	<	1.9e-5
TICs												
Furan, 2,5-dimethyl-	N,J,M	2.2e0	N,J,M	3.1e0	N,J,M	3.2e0	N,J,M	6.7e1	N,J,M	1.1e-6	N,J,M	8.8e-6
3-Hexanone	N,J,M	2.2e1	N,J,M	3.1e1	N,J,M	3.1e1	N,J,M	6.6e2	N,J,M	1.1e-5	N,J,M	8.7e-5
Heptane, 2,5-dimethyl-	N,J,M	1.6e0	N,J,M	2.3e0	N,J,M	2.3e0	N,J,M	4.8e1	N,J,M	8.1e-7	N,J,M	6.4e-6
Benzaldehyde	N,J,M	1.5e2	N,J,M	2.1e2	N,J,M	2.2e2	N,J,M	4.6e3	N,J,M	7.6e-5	N,J,M	6.1e-4
Formic acid, phenylmethyl este	N,J,M	1.2e1	N,J,M	1.7e1	N,J,M	1.7e1	N,J,M	3.5e2	N,J,M	5.9e-6	N,J,M	4.7e-5
Dodecane	N,J,M	1.2e1	N,J,M	1.8e1	N,J,M	1.8e1	N,J,M	3.8e2	N,J,M	6.3e-6	N,J,M	5.0e-5
Tridecane	N,J,M	4.1e0	N,J,M	5.8e0	N,J,M	5.8e0	N,J,M	1.2e2	N,J,M	2.0e-6	N,J,M	1.6e-5
Naphthalene, 1-methyl-	N,J,Q	1.8e0	N,J,Q	2.5e0	N,J,Q	2.5e0	N,J,Q	5.3e1	N,J,Q	8.9e-7	N,J,Q	7.0e-6
Tetradecane	N,J,M	1.3e1	N,J,M	1.8e1	N,J,M	1.8e1	N,J,M	3.8e2	N,J,M	6.4e-6	N,J,M	5.1e-5
Cyclododecane	N,J,M	1.3e0	N,J,M	1.8e0	N,J,M	1.8e0	N,J,M	3.8e1	N,J,M	6.4e-7	N,J,M	5.1e-6
Hexanedioic acid, bis(2-ethylh)	N,J,Q	2.3e0	N,J,Q	3.2e0	N,J,Q	3.2e0	N,J,Q	6.8e1	N,J,Q	1.1e-6	N,J,Q	9.0e-6
1,2-Benzenedicarboxylic acid,	N,J,Q	1.9e0	N,J,Q	2.7e0	N,J,Q	2.7e0	N,J,Q	5.7e1	N,J,Q	9.6e-7	N,J,Q	7.6e-6
Benzo(e)pyrene	N,J,Q	3.2e0	N,J,Q	4.5e0	N,J,Q	4.5e0	N,J,Q	9.6e1	N,J,Q	1.6e-6	N,J,Q	1.3e-5
Heptane, 2,3-dimethyl-												
Benzoic acid, methyl ester												
Benzaldehyde, ethyl-												
Pentadecane												
Heptadecane												
Eicosane												
Heneicosane												
Octodecane												
Phosphine oxide, triphenyl-												
Nonacosane												
Hexatriacontane												
Tetracosane												
Tetratriacontane												

Table B-4. SVOC-END-2.

SVOC SAMPLING DATA SHEET FOR HLLWE TESTS

Site:	HLLWE Offgas Tie-in	Sampling Location:	MAN-OFG-73	Nozzle No.:	2-01	Est. DP: 0.15	Est. Tstack, °F: 132
Project:	01-1062-01-0866	Duct ID, inches:	12	Nozzle Size, in.:	0.3140	Est. K: 7.68	Est. vs, ft/s: 25.9
Date:	6/19/2001	Static Pressure, in. WG:	-17.5	Pitot No.:	JM-2	Est. DH: 1.15	Operator(s): RW,FE
Run No.:	0010-END-2	Est. O2, %:	20.5	Pitot Coeff.:	0.84	Est. DGM Temperature, °F	80
Run Type:	Test	Est CO2, %:	0	Meter Box No.	2	**Meter Box Leak Checks:**	Pitot: Pass
Pbar., in. Hg:	25.099	Est. Moist., %:	1.3%	ΔH@:	1.5673	Pretest 0.001 cfm @	16 in. Hg
Tambient, °F:	75	Impinger Box No.:	2	Y-factor:	1.0328		Pitot: pass
DGM vol. Goal (m^3):	3.00	DGM vol. Goal (ft^3):	127.080	Min. ending DGM vol. (ft^3):	746.434	Post-test 0.001 cfm @	13 in. Hg

Sampling Time (min.)	Clock Time (24hr)	Velocity ΔP (in. WG)	Meter ΔH (in. WG)	Meter Volume (cubic feet)	TEMPERATURE (°F) Heated Line	Stack	Meter In	Meter Out	Filter	Impinger Exit	Aux. (XAD)	Pump Vacuum (in. Hg)	%I_i	COMMENTS
0	14:00	0.14	1.30	619.354	266	132	81	76	275	55	64	12.5	-	
10	14:10	0.14	1.30	626.430	266	132	84	77	276	52	58	12.5	106	
20	14:20	0.14	1.30	633.410	266	132	88	78	259	54	56	12.5	104	
30	14:30	0.14	1.25	640.390	266	132	90	80	260	55	55	12.5	104	
40	14:40	0.14	1.20	647.200	266	132	91	81	259	55	55	12.1	101	
50	14:50	0.14	1.20	654.660	266	132	92	81	260	55	54	12.1	111	
60	15:00	0.14	1.15	661.640	265	132	93	82	260	56	56	11.9	103	
70	15:10	0.14	1.15	668.610	266	132	93	82	260	56	57	11.9	103	
80	15:20	0.14	1.15	675.590	266	132	94	82	260	56	57	11.9	103	
90	15:30	0.14	1.15	682.560	266	132	94	83	259	56	57	11.9	103	
100	15:40	0.14	1.15	689.560	265	132	95	84	259	57	58	11.9	103	
110	15:50	0.14	1.15	696.570	265	132	95	84	259	57	59	11.9	104	
120	16:00	0.14	1.15	703.580	265	132	95	85	259	58	61	11.9	103	
130	16:10	0.14	1.15	710.590	265	132	95	85	259	55	61	11.9	103	
140	16:20	0.14	1.14	717.620	265	132	95	85	258	53	59	11.9	104	
150	16:30	0.14	1.20	724.740	265	132	96	85	259	53	59	11.9	105	
160	16:40	0.14	1.20	731.880	265	132	96	85	258	53	60	11.9	105	
170	16:50	0.14	1.20	738.740	265	132	96	86	259	54	60	11.9	101	
180	17:00	0.14	1.20	745.790	265	132	96	86	259	54	61	11.9	104	
190	17:10	0.14	1.20	752.830	265	132	96	85	259	54	61	11.9	104	
195	17:15	0.14	1.20	756.352	265	132	95	86	258	54	62	11.9	104	
Total	Total	ΔP_{avg}	Average	Total	Average Temperatures (°F)							Max.	Ave. %I_i	
195	3:15	0.140	1.19	136.998	265	132	93	83	261	55	59	12.5	104	

Table B-4. SVOC-END-2.

0010 CONFIGURATION TRAIN COMPONENT DATA SHEET
for HLLWE OFFGAS SAMPLING

Site: HLLWE Offgas Tie-in

Date: 6/19/2001

Run No.: 0010-END-2

Impinger Box no.: 2

XAD trap Quanterra No.: **A-3424**

Component:	XAD	KO-1	Imp-1	Imp-2	Acid Scrub Section			
Type:	trap	short stem	modified	G-S	short stem	modified	modified	
Reagent:	XAD-2	None	Organics free water		None	**2N** NaOH	Silica Gel	
Nominal Contents:	20 - 40g, dry	Empty	100 mL	100 mL	Empty	**100** mL	300-400g	
Post-test Wt., g:	313.3	533.9	681.7	691.6	576.5	728.6	800.7	Impinger Wt. Gain
Pre-test Wt., g:	313.6	531.9	688.2	690.9	573.6	730.4	773.4	
Wt. Gain, g:	-0.3	2.0	-6.5	0.7	2.9	-1.8	27.3	24.3
Post-test Volume:		0.0	100.0	100.0	0.0			Impinger Vol. Gain
Pre-test Volume:		0.0	100.0	100.0	0.0			
Volume Gain:		0.0	0.0	0.0	0.0			0.0
Post-test pH:			6.0	6.0		13.0		

Filter Lot # STL-A4023 OF water Lot # QCLAB-1 NaOH Lot # 000381

O2% 20.6

CO2% 0.0

Record impinger change-out and other important information below:

Table B-4. SVOC-END-2.

FIELD DATA CALCULATIONS

Project: 01-1062-01-0866 Run Date: 6/19/2001 Run Identification: 0010-END-2			
PARAMETER	SYMBOL	UNITS	
Absolute Pressure in the Duct	Pabs	in. Hg	23.812
Average Duct Gas Temperature	Ts	R	592
Average Meter Temperature	Tm	R	547
Average Gas Oxygen Content	Co2,m	%	20.6
Average Gas Carbon Dioxide Content	Cco2,m	%	0.0
Total Impinger Weight Gain (water)	Ww	grams	24.3
Nozzle Area	An	ft^2	0.000538
Duct Area	As	ft^2	0.7854
Sample Volume	VmStd	dscf	114.799
Sample Volume (SI)	VmStdm	dscm	3.251
Average Sampling Rate	Qm	dscf/m	0.589
Volume of Water Vapor	VwStd	scf	1.146
Volume of Water Vapor (SI)	VwStdm	scm	0.0324
Moisture Fraction	Bws	-	0.010
Dry Gas Molecular Weight	Md	g/g-mol	28.82
Wet Gas Molecular Weight	Ms	g/g-mol	28.72
Gas Velocity at Nozzle	vn	ft/s	25.0
Gas Velocity at Nozzle (SI)	vnm	m/s	7.62
Average Gas Velocity	vncor	ft/s	21.09
Dry Offgas Flow Rate	Qsd	dscf/h	41,913
Dry Offgas Flow Rate (SI)	Qsdm	dscm/h	1,186.9
Actual Offgas Flow Rate	Q	acf/h	59,641
Intermediate Isokinetic Rate	Ii	%	104.2
Final Isokinetic Rate	**I**	**%**	**103.9**

Table B-4. SVOC-END-2.

Project:	01-1062-01-0866
Run Date:	6/19/2001
Run Identification:	0010-END-2
Run Type:	Test
Lab Report Date:	8/28/2001
Lab Report Status: (preliminary or final)	Final

RESULTS

• without blank corrections

• final presentation should be rounded to two significant digits

	CONCENTRATIONS						MASS FLOW RATES					
	Actual (µg/acm)		Standard (µg/scm)		Dry Standard (µg/dscm)		µg/min		grams/sec		lb/h	
Acenaphthene	<	2.1e0	<	3.0e0	<	3.0e0	<	6.0e1	<	9.9e-7	<	7.9e-6
Acenaphthylene	<	2.1e0	<	2.9e0	<	2.9e0	<	5.8e1	<	9.6e-7	<	7.6e-6
Acetophenone	<,J	8.0e0	<,J	1.1e1	<,J	1.1e1	<,J	2.3e2	<,J	3.8e-6	<,J	3.0e-5
Aniline	<	2.4e1	<	3.4e1	<	3.4e1	<	6.7e2	<	1.1e-5	<	8.9e-5
Anthracene	<	2.1e0	<	2.9e0	<	2.9e0	<	5.8e1	<	9.6e-7	<	7.6e-6
Benzidine	<	1.4e2	<	2.0e2	<	2.1e2	<	4.1e3	<	6.8e-5	<	5.4e-4
Benzoic acid	E	5.8e2	E	8.2e2	E	8.3e2	E	1.6e4	E	2.7e-4	E	2.2e-3
Benzo(a)anthracene	<	2.6e0	<	3.7e0	<	3.7e0	<	7.3e1	<	1.2e-6	<	9.7e-6
Benzo(a)pyrene	<	2.8e1	<	4.0e1	<	4.0e1	<	7.9e2	<	1.3e-5	<	1.0e-4
Benzo(b)fluoranthene	<	6.5e1	<	9.1e1	<	9.2e1	<	1.8e3	<	3.0e-5	<	2.4e-4
Benzo(g,h,i)perylene	<	3.7e1	<	5.2e1	<	5.2e1	<	1.0e3	<	1.7e-5	<	1.4e-4
Benzo(k)fluoranthene	<	9.3e1	<	1.3e2	<	1.3e2	<	2.6e3	<	4.4e-5	<	3.5e-4
Benzyl alcohol	<	1.2e2	<	1.7e2	<	1.8e2	<	3.5e3	<	5.8e-5	<	4.6e-4
bis(2-Chloroethoxy)methane	<	2.2e0	<	3.0e0	<	3.1e0	<	6.1e1	<	1.0e-6	<	8.0e-6
bis(2-Chloroethyl)ether	<	2.4e0	<	3.4e0	<	3.4e0	<	6.7e1	<	1.1e-6	<	8.9e-6
bis(2-Ethylhexyl)phthalate	<,J	3.5e1	<,J	4.9e1	<,J	4.9e1	<,J	9.7e2	<,J	1.6e-5	<,J	1.3e-4
4-Bromophenyl-phenylether	<	2.0e0	<	2.9e0	<	2.9e0	<	5.7e1	<	9.5e-7	<	7.6e-6
Butylbenzylphthalate	<	2.8e0	<	4.0e0	<	4.0e0	<	7.9e1	<	1.3e-6	<	1.0e-5
Carbazole	<	2.8e0	<	4.0e0	<	4.0e0	<	7.9e1	<	1.3e-6	<	1.0e-5
4-Chloro-3-methylphenol	<	3.7e0	<	5.2e0	<	5.2e0	<	1.0e2	<	1.7e-6	<	1.4e-5
4-Chloroaniline	<	1.9e1	<	2.7e1	<	2.8e1	<	5.5e2	<	9.1e-6	<	7.2e-5
2-Chloronaphthalene	<	2.0e0	<	2.8e0	<	2.9e0	<	5.7e1	<	9.4e-7	<	7.5e-6
2-Chlorophenol	<	2.4e0	<	3.4e0	<	3.4e0	<	6.7e1	<	1.1e-6	<	8.9e-6
4-Chlorophenyl phenyl ether	<	2.4e0	<	3.4e0	<	3.4e0	<	6.7e1	<	1.1e-6	<	8.9e-6
Chrysene	<	2.6e0	<	3.7e0	<	3.7e0	<	7.3e1	<	1.2e-6	<	9.7e-6
Di-n-butylphthalate	<,J	2.2e1	<,J	3.0e1	<,J	3.1e1	<,J	6.1e2	<,J	1.0e-5	<,J	8.0e-5
Di-n-octylphthalate	<,J	3.5e1	<,J	4.9e1	<,J	4.9e1	<,J	9.7e2	<,J	1.6e-5	<,J	1.3e-4
Dibenz(a,h)anthracene	<	3.7e1	<	5.2e1	<	5.2e1	<	1.0e3	<	1.7e-5	<	1.4e-4
Dibenzofuran	<	2.4e0	<	3.4e0	<	3.4e0	<	6.7e1	<	1.1e-6	<	8.9e-6
1,2-Dichlorobenzene	<	2.4e0	<	3.4e0	<	3.4e0	<	6.7e1	<	1.1e-6	<	8.9e-6
1,3-Dichlorobenzene	<	2.6e0	<	3.7e0	<	3.7e0	<	7.3e1	<	1.2e-6	<	9.7e-6
1,4-Dichlorobenzene	<,J	4.5e0	<,J	6.4e0	<,J	6.5e0	<,J	1.3e2	<,J	2.1e-6	<,J	1.7e-5
3,3'-Dichlorobenzidine	<	2.4e1	<	3.4e1	<	3.4e1	<	6.7e2	<	1.1e-5	<	8.9e-5
2,4-Dichlorophenol	<	2.8e0	<	4.0e0	<	4.0e0	<	7.9e1	<	1.3e-6	<	1.0e-5
Diethylphthalate	<	3.2e0	<	4.6e0	<	4.6e0	<	9.1e1	<	1.5e-6	<	1.2e-5
Dimethyl phthalate	<	2.1e0	<	2.9e0	<	3.0e0	<	5.8e1	<	9.7e-7	<	7.7e-6
2,4-Dimethylphenol	<	1.3e1	<	1.8e1	<	1.8e1	<	3.6e2	<	6.0e-6	<	4.7e-5
4,6-Dinitro-2-methylphenol	<	2.8e1	<	4.0e1	<	4.0e1	<	7.9e2	<	1.3e-5	<	1.0e-4
2,4-Dinitrophenol	<	5.8e1	<	8.2e1	<	8.3e1	<	1.6e3	<	2.7e-5	<	2.2e-4
2,4-Dinitrotoluene	<	2.8e0	<	4.0e0	<	4.0e0	<	7.9e1	<	1.3e-6	<	1.0e-5
2,6-Dinitrotoluene	<	2.6e0	<	3.7e0	<	3.7e0	<	7.3e1	<	1.2e-6	<	9.7e-6
1,2-Diphenylhydrazine	<	2.1e0	<	3.0e0	<	3.0e0	<	6.0e1	<	9.9e-7	<	7.9e-6
Fluoranthene	<	2.2e0	<	3.0e0	<	3.1e0	<	6.1e1	<	1.0e-6	<	8.0e-6
Fluorene	<	2.2e0	<	3.0e0	<	3.1e0	<	6.1e1	<	1.0e-6	<	8.0e-6
Hexachlorocyclopentadiene	<	3.5e1	<	4.9e1	<	4.9e1	<	9.7e2	<	1.6e-5	<	1.3e-4
Hexachlorobenzene	<	2.4e0	<	3.4e0	<	3.4e0	<	6.7e1	<	1.1e-6	<	8.9e-6
Hexachlorobutadiene	<	3.2e0	<	4.6e0	<	4.6e0	<	9.1e1	<	1.5e-6	<	1.2e-5
Hexachloroethane	<	3.5e0	<	4.9e0	<	4.9e0	<	9.7e1	<	1.6e-6	<	1.3e-5
Indeno(1,2,3-cd)pyrene	<	3.2e1	<	4.6e1	<	4.6e1	<	9.1e2	<	1.5e-5	<	1.2e-4
Isophorone	<	2.2e0	<	3.0e0	<	3.1e0	<	6.1e1	<	1.0e-6	<	8.0e-6
2-Methylnaphthalene	<	2.2e0	<	3.0e0	<	3.1e0	<	6.1e1	<	1.0e-6	<	8.0e-6
2-Methylphenol	<	1.0e1	<	1.4e1	<	1.4e1	<	2.9e2	<	4.8e-6	<	3.8e-5

Table B-4. SVOC-END-2.

Project:	01-1062-01-0866
Run Date:	6/19/2001
Run Identification:	0010-END-2
Run Type:	Test
Lab Report Date:	8/28/2001
Lab Report Status: (preliminary or final)	Final

RESULTS

• without blank corrections

• final presentation should be rounded to two significant digits

	CONCENTRATIONS			MASS FLOW RATES		
	Actual (µg/acm)	Standard (µg/scm)	Dry Standard (µg/dscm)	µg/min	grams/sec	lb/h
3-Methylphenol & 4-Methylphenol	< 7.4e0	< 1.0e1	< 1.0e1	< 2.1e2	< 3.4e-6	< 2.7e-5
N-Nitroso-di-n-propylamine	< 2.4e0	< 3.4e0	< 3.4e0	< 6.7e1	< 1.1e-6	< 8.9e-6
N-Nitrosodimethylamine	< 2.4e0	< 3.4e0	< 3.4e0	< 6.7e1	< 1.1e-6	< 8.9e-6
N-Nitrosodiphenylamine	< 3.2e0	< 4.6e0	< 4.6e0	< 9.1e1	< 1.5e-6	< 1.2e-5
Naphthalene	< 2.4e0	< 3.4e0	< 3.4e0	< 6.7e1	< 1.1e-6	< 8.9e-6
2-Nitroaniline	< 2.4e0	< 3.4e0	< 3.4e0	< 6.7e1	< 1.1e-6	< 8.9e-6
3-Nitroaniline	< 8.9e0	< 1.2e1	< 1.3e1	< 2.5e2	< 4.2e-6	< 3.3e-5
4-Nitroaniline	< 7.8e0	< 1.1e1	< 1.1e1	< 2.2e2	< 3.7e-6	< 2.9e-5
Nitrobenzene	<,J 2.6e0	<,J 3.7e0	<,J 3.7e0	<,J 7.3e1	<,J 1.2e-6	<,J 9.7e-6
2-Nitrophenol	<,J 1.1e1	<,J 1.6e1	<,J 1.6e1	<,J 3.1e2	<,J 5.2e-6	<,J 4.1e-5
4-Nitrophenol	<,J 1.2e1	<,J 1.7e1	<,J 1.7e1	<,J 3.3e2	<,J 5.6e-6	<,J 4.4e-5
2,2'-Oxybis(1-chloropropane)	< 3.0e0	< 4.3e0	< 4.3e0	< 8.5e1	< 1.4e-6	< 1.1e-5
Pentachlorobenzene	< 2.2e0	< 3.0e0	< 3.1e0	< 6.1e1	< 1.0e-6	< 8.0e-6
Pentachloronitrobenzene	< 2.4e0	< 3.4e0	< 3.4e0	< 6.7e1	< 1.1e-6	< 8.9e-6
Pentachlorophenol	< 8.0e1	< 1.1e2	< 1.1e2	< 2.3e3	< 3.8e-5	< 3.0e-4
Phenanthrene	< 2.1e0	< 3.0e0	< 3.0e0	< 6.0e1	< 9.9e-7	< 7.9e-6
Phenol	<,J 8.4e0	<,J 1.2e1	<,J 1.2e1	<,J 2.4e2	<,J 4.0e-6	<,J 3.1e-5
Pyrene	< 2.2e0	< 3.0e0	< 3.1e0	< 6.1e1	< 1.0e-6	< 8.0e-6
Pyridine	< 3.7e0	< 5.2e0	< 5.2e0	< 1.0e2	< 1.7e-6	< 1.4e-5
1,2,4,5-Tetrachlorobenzene	< 2.4e0	< 3.4e0	< 3.4e0	< 6.7e1	< 1.1e-6	< 8.9e-6
1,2,4-Trichlorobenzene	< 2.6e0	< 3.7e0	< 3.7e0	< 7.3e1	< 1.2e-6	< 9.7e-6
2,4,5-Trichlorophenol	< 5.4e0	< 7.6e0	< 7.7e0	< 1.5e2	< 2.5e-6	< 2.0e-5
2,4,6-Trichlorophenol	< 3.5e0	< 4.9e0	< 4.9e0	< 9.7e1	< 1.6e-6	< 1.3e-5
TICs						
3-Hexanone	N,J, 1.5e1	N,J 2.1e1	N,J 2.2e1	N,J 4.3e2	N,J 7.1e-6	N,J 5.6e-5
Benzaldehyde	N,J, 1.6e2	N,J 2.2e2	N,J 2.2e2	N,J 4.4e3	N,J 7.4e-5	N,J 5.9e-4
2-Cyclohexene-1-one, 3-methyl-	N,J, 6.9e-1	N,J 9.7e-1	N,J 9.8e-1	N,J 1.9e1	N,J 3.2e-7	N,J 2.6e-6
Formic acid, phenylmethyl ester	N,J, 2.1e1	N,J 2.9e1	N,J 2.9e1	N,J 5.8e2	N,J 9.6e-6	N,J 7.6e-5
Benzaldehyde, ethyl-	N,J, 1.3e1	N,J 1.9e1	N,J 1.9e1	N,J 3.7e2	N,J 6.2e-6	N,J 4.9e-5
Dodecane	N,J, 8.0e0	N,J 1.1e1	N,J 1.1e1	N,J 2.3e2	N,J 3.8e-6	N,J 3.0e-5
Tridecane	N,J, 4.5e0	N,J 6.4e0	N,J 6.5e0	N,J 1.3e2	N,J 2.1e-6	N,J 1.7e-5
2,4-Hexadiene	N,J, 6.1e0	N,J 8.5e0	N,J 8.6e0	N,J 1.7e2	N,J 2.8e-6	N,J 2.3e-5
2,5-Diethylphenol	N,J, 2.2e1	N,J 3.0e1	N,J 3.1e1	N,J 6.1e2	N,J 1.0e-5	N,J 8.0e-5
Tetradecane	N,J, 2.1e1	N,J 3.0e1	N,J 3.0e1	N,J 6.0e2	N,J 1.0e-5	N,J 8.0e-5
Hexatriacontane	N,J, 1.2e0	N,J 1.7e0	N,J 1.8e0	N,J 3.5e1	N,J 5.8e-7	N,J 4.6e-6
Phosphoric acid tributyl ester	N,J, 5.2e0	N,J 7.3e0	N,J 7.4e0	N,J 1.5e2	N,J 2.4e-6	N,J 1.9e-5
Cyclododecane	N,J, 2.8e0	N,J 4.0e0	N,J 4.0e0	N,J 7.9e1	N,J 1.3e-6	N,J 1.0e-5
Pentadecane	N,J, 9.7e-1	N,J 1.4e0	N,J 1.4e0	N,J 2.7e1	N,J 4.6e-7	N,J 3.6e-6
Heneicosane	N,J, 2.0e0	N,J 2.8e0	N,J 2.8e0	N,J 5.5e1	N,J 9.2e-7	N,J 7.3e-6
Tetracosane	N,J, 5.6e0	N,J 7.9e0	N,J 8.0e0	N,J 1.6e2	N,J 2.6e-6	N,J 2.1e-5
Pentacosane	N,J, 8.0e0	N,J 1.1e1	N,J 1.1e1	N,J 2.3e2	N,J 3.8e-6	N,J 3.0e-5
Hexacosane	N,J, 1.4e1	N,J 1.9e1	N,J 2.0e1	N,J 3.9e2	N,J 6.5e-6	N,J 5.2e-5
Heptacosane	N,J, 1.8e1	N,J 2.5e1	N,J 2.6e1	N,J 5.1e2	N,J 8.4e-6	N,J 6.7e-5
Hexatriacontane	N,J, 4.3e1	N,J 6.1e1	N,J 6.2e1	N,J 1.2e3	N,J 2.0e-5	N,J 1.6e-4
Eicosane	N,J, 4.1e0	N,J 5.8e0	N,J 5.8e0	N,J 1.2e2	N,J 1.9e-6	N,J 1.5e-5
Furan, 2,5-dimethyl-						
Heptane, 2,5-dimethyl-						
Heptane, 2,3-dimethyl-						
Benzoic acid, methyl ester						
Heptadecane						
Octodecane						
Phosphine oxide, triphenyl-						
Nonacosane						
Tetratriacontane						

Table B-5. 0031-STRT-1.

VOST SAMPLING DATA SHEET

Site:	HLLWE Offgas Tie-in	Run No.:	0031-STRT-1	Meter Box No.:	1 & 2
Project:	01-1062-01-0866	Run Type:	Test	Y-factor:	.9984/1.005
Date:	6/20/2001	$P_{bar.}$, in. Hg:	25.297	Operator:	RW/FE/JA

VOST Tube Sample Numbers	Leak Check Rate (L/min)	Leak Check @ vacuum (in. Hg)	Sampling Rate (L/min)	Sampling Time (24 hr)	Sampling Time (min.)	Probe Temp. (°C)	Condenser Temp. (°C)	Meter Temp. (°C)	Meter Volume (L)	Pump Vacuum (in. Hg)
Set 1	Pretest		Target:	8:10	0	130	5.0	15	0.000	4.5
A-3359	0.009	5	1L/MIN	8:15	5	130	5.0	17	2.884	4.5
A-3360				8:20	10	130	4.0	17	6.083	4.7
A-3361				8:25	15	130	5.0	19	9.194	4.7
				8:30	20	130	5.0	19	12.439	4.7
				8:35	25	130	5.0	21	15.653	4.7
				8:40	30	130	5.0	21	18.725	4.3
				8:45	35	130	6.0	22	21.483	4.3
	Post-test			8:50	40	130	6.0	22	24.230	4.3
	0.003	5.5	Total	0:40	40				24.230	Max:
			Average			130	5.1	19		4.7
Set 2	Pretest		Target:	9:00	0	130	7.0	22	0.000	7.5
A-3362	0.007	16	1L/MIN	9:05	5	130	6.0	23	3.574	11.0
A-3363				9:10	10	130	6.0	24	8.376	12.5
A-3364				9:15	15	130	6.0	26	13.373	12.5
				9:20	20	130	8.0	25	18.381	12.5
				9:25	25	130	8.0	25	23.393	12.5
	Post-test			9:26	26	130	8.0	25	24.020	12.5
	0.007	16	Total	0:26	26				24.020	Max:
			Average			130	7.0	24		12.5
Set 3	Pretest		Target:	9:48	0	130	10.0	27	0.000	9.5
A-3365	0.007	16		9:53	5	130	8.0	28	5.031	9.5
A-3366				9:58	10	130	8.0	28	10.566	10.0
A-3337				10:03	15	130	8.0	28	15.901	9.0
				10:08	20	130	8.0	29	21.074	9.0
	Post-test			10:11	23	130	8.0	29	24.202	9.0
	0.004	16	Total	0:23	23				24.202	Max:
			Average			130	8.3	28		10.0
Set 4	Pretest		Target:	10:23	0	130	13.0	29	0.000	12.7
A-3368	0.005	16		10:28	5	130	9.0	29	4.833	12.7
A-3369				10:33	10	130	7.0	30	9.742	12.7
A-3370				10:38	15	130	7.0	30	14.662	12.7
				10:43	20	130	7.0	30	19.598	12.8
	Post-test			10:48	25	130	7.0	31	24.544	12.8
	0.002	16	Total	0:25	25				24.544	Max:
			Average			130	8.3	30		12.8

Condensate	**Tenax Rinse:**	**Anasorb Rinse:**
A-3371	NA	NA
Final Condensate Volume:	Tenax Rinse Vol.:	Anasorb Rinse Vol.:
40 mL	NA mL	NA mL

ADDITIONAL INPUTS

	Symbol	Units	Set 1	Set 2	Set 3	Set 4	Average
Average Dry Oxygen Concentration	Co2	%	20.5	20.5	20.5	20.5	20.5
Process Gas Flow (dry, STP) @ 68°F	Qsd	dscm/sec	0.330	0.330	0.330	0.330	0.330

CALCULATED SAMPLING PARAMETERS

	Symbol	Units	Set 1	Set 2	Set 3	Set 4	Net
Sample Volume @ Standard Conditions	VmStd	dsL	20.508	20.116	20.008	20.179	80.810
VmStd=17.647 * Y * Pbar * Vm/(Fm + 460)							
Avg. Actual Sampling Rate, Qm=Vm/min	Qm	L/min	0.606	0.924	1.052	0.982	0.891
Avg. Sampling Rate, QmStd=VmStd/min	QmStd	dsL/min	0.513	0.774	0.870	0.807	0.741

Table B-5. 0031-STRT-1.

CONCENTRATIONS
micrograms per dry standard cubic meter

Project:	0866	Lab Report Date:	08/20/01
Run Date:	6/20/2001	Lab Report Status:	Final
Run Identification:	0031-STRT-1		

Analyte	Run Total Flag	µg/dscm
Acetone	B	8.9e1
Acrylonitrile	<	3.5e1
Benzene	<	4.9e0
Bromobenzene	<	1.5e0
Bromochloromethane	<	1.9e0
Bromodichloromethane	<	1.5e0
Bromoform	<	2.2e0
Bromomethane	<,J	2.1e0
2-Butanone	<,J	1.1e1
n-Butylbenzene	<	1.9e0
sec-Butylbenzene	<	1.1e0
tert-Butylbenzene	<	1.7e0
Carbon disulfide	<	1.2e1
Carbon tetrachloride	<	2.0e0
Chlorobenzene	<	1.2e0
Chlorodibromomethane	<	1.9e0
Chloroethane	<,J	2.0e0
Chloroform	<,J	3.0e0
Chloromethane	J	1.5e1
2-Chlorotoluene	<	7.3e-1
4-Chlorotoluene	<	7.3e-1
1,2-Dibromo-3-chloropropane	<	3.3e0
1,2-Dibromoethane	<	2.5e0
Dibromomethane	<	2.1e0
1,2-Dichlorobenzene	<	2.2e0
1,3-Dichlorobenzene	<	1.2e0
1,4-Dichlorobenzene	<	1.7e0
Dichlorodifluoromethane	<	3.2e0
1,1-Dichloroethane	<	1.9e0
1,2-Dichloroethane	<,J	2.0e0
1,1-Dichloroethene	<,J	2.0e0
cis-1,2-Dichloroethene	<	1.9e0
trans-1,2-Dichloroethene	<	2.1e0
1,2-Dichloropropane	<	1.6e0
1,3-Dichloropropane	<	2.1e0
2,2-Dichloropropane	<	2.0e0
1,1-Dichloropropene	<	2.2e0
cis-1,3-Dichloropropene	<	1.6e0
trans-1,3-Dichloropropene	<	1.9e0
Ethylbenzene	<	1.2e0
Hexachlorobutadiene	<	2.7e0
2-Hexanone	<	6.9e0
Isopropylbenzene	<	8.7e-1
p-Isopropyltoluene	<	1.4e0
Methylene chloride	E,B	2.2e2
4-Methyl-2-pentanone	<	7.3e0
Naphthalene	<	2.6e0
n-Propylbenzene	<	8.3e-1

Table B-5. 0031-STRT-1.

CONCENTRATIONS
micrograms per dry standard cubic meter

Project:	0866	Lab Report Date:	08/20/01
Run Date:	6/20/2001	Lab Report Status:	Final
Run Identification:	0031-STRT-1		

Analyte	Run Total Flag	µg/dscm
Styrene	<	9.7e-1
1,1,1,2-Tetrachloroethane	<	1.2e0
1,1,2,2-Tetrachloroethane	<	2.7e0
Tetrachloroethene	<	1.9e0
Toluene	<,J	2.4e0
1,2,3-Trichlorobenzene	<	2.6e0
1,2,4-Trichlorobenzene	<	2.7e0
1,1,1-Trichloroethane	<	2.4e0
1,1,2-Trichloroethane	<	2.1e0
Trichloroethene	<	2.0e0
Trichlorofluoromethane	<,J	2.0e0
1,2,3-Trichloropropane	<	3.0e0
1,2,4-Trimethylbenzene	<	1.2e0
1,3,5-Trimethylbenzene	<	7.3e-1
Vinyl chloride	<,J	1.6e0
m-Xylene & p-Xylene	<	5.4e0
o-Xylene	<	9.5e-1
TICS		
Hexane, 2-methyl-	N,J,M	2.1e0
Pentane, 2,3-dimethyl-	N,J,M	2.2e0
Butane, 1-chloro-	N,J,M	7.1e-1
Hexane, 3-methyl-	N,J,M	4.7e0
Cyclohexene	N,J,M	1.2e0
1-Heptene	N,J,M	6.7e-1
Cyclohexane, methyl-	N,J,M	1.4e0
Hexane, 2,4-dimethyl-	N,J,M	1.4e0
Cyclopentane, ethyl-	N,J,M	3.5e-1
Octane	N,J,M	3.3e-1
Decane	N,J,M	1.5e0
Undecane	N,J,M	1.2e1
Undecane, 5-methyl-	N,J,M	7.9e0
Decane, 2,9-dimethyl-	N,J,M	7.9e-1
Dodecane	N,J,M	3.8e2
Undecane, 2,6-dimethyl-	N,J,M	1.4e0
Cyclohexane, hexyl-	N,J,M	7.3e-1
Tridecane	N,J,M	3.5e1
Tetradecane	N,J,M	1.1e1
Pentane, 3,3-dimethyl-		
Pentane, 3-ethyl-		
Cyclopentane, 1,2-dimethyl-		

Table B-11. 0031-STRT-1.

MASS FLOW RATE
grams per second

Project:	01-1062-01-0866	Lab Report Date:	08/20/01
Run Date:	6/20/2001	Lab Report Status:	Final
Run Identification:	0031-STRT-1		

Analyte	Run Total Flag	Run Total g/sec
Acetone	B	2.9e-5
Acrylonitrile	<	1.1e-5
Benzene	<	1.6e-6
Bromobenzene	<	4.9e-7
Bromochloromethane	<	6.1e-7
Bromodichloromethane	<	4.9e-7
Bromoform	<	7.3e-7
Bromomethane	<,J	6.9e-7
2-Butanone	<,J	3.6e-6
n-Butylbenzene	<	6.1e-7
sec-Butylbenzene	<	3.5e-7
tert-Butylbenzene	<	5.7e-7
Carbon disulfide	<	4.0e-6
Carbon tetrachloride	<	6.5e-7
Chlorobenzene	<	3.9e-7
Chlorodibromomethane	<	6.1e-7
Chloroethane	<,J	6.5e-7
Chloroform	<,J	9.8e-7
Chloromethane	J	4.9e-6
2-Chlorotoluene	<	2.4e-7
4-Chlorotoluene	<	2.4e-7
1,2-Dibromo-3-chloropropane	<	1.1e-6
1,2-Dibromoethane	<	8.2e-7
Dibromomethane	<	6.9e-7
1,2-Dichlorobenzene	<	7.3e-7
1,3-Dichlorobenzene	<	4.1e-7
1,4-Dichlorobenzene	<	5.7e-7
Dichlorodifluoromethane	<	1.1e-6
1,1-Dichloroethane	<	6.1e-7
1,2-Dichloroethane	<,J	6.5e-7
1,1-Dichloroethene	<,J	6.5e-7
cis-1,2-Dichloroethene	<	6.1e-7
trans-1,2-Dichloroethene	<	6.9e-7
1,2-Dichloropropane	<	5.3e-7
1,3-Dichloropropane	<	6.9e-7
2,2-Dichloropropane	<	6.5e-7
1,1-Dichloropropene	<	7.3e-7
cis-1,3-Dichloropropene	<	5.3e-7
trans-1,3-Dichloropropene	<	6.1e-7
Ethylbenzene	<	3.8e-7
Hexachlorobutadiene	<	9.0e-7
2-Hexanone	<	2.3e-6
Isopropylbenzene	<	2.9e-7
p-Isopropyltoluene	<	4.5e-7
Methylene chloride	E,B	7.3e-5
4-Methyl-2-pentanone	<	2.4e-6
Naphthalene	<	8.6e-7
n-Propylbenzene	<	2.7e-7

Table B-11. 0031-STRT-1.

MASS FLOW RATE
grams per second

Project:	01-1062-01-0866	Lab Report Date:	08/20/01
Run Date:	6/20/2001	Lab Report Status:	Final
Run Identification:	0031-STRT-1		

Analyte	Run Total Flag	Run Total g/sec
Styrene	<	3.2e-7
1,1,1,2-Tetrachloroethane	<	4.0e-7
1,1,2,2-Tetrachloroethane	<	9.0e-7
Tetrachloroethene	<	6.1e-7
Toluene	<,J	7.8e-7
1,2,3-Trichlorobenzene	<	8.6e-7
1,2,4-Trichlorobenzene	<	9.0e-7
1,1,1-Trichloroethane	<	7.8e-7
1,1,2-Trichloroethane	<	6.9e-7
Trichloroethene	<	6.5e-7
Trichlorofluoromethane	<,J	6.5e-7
1,2,3-Trichloropropane	<	9.8e-7
1,2,4-Trimethylbenzene	<	4.1e-7
1,3,5-Trimethylbenzene	<	2.4e-7
Vinyl chloride	<,J	5.3e-7
m-Xylene & p-Xylene	<	1.8e-6
o-Xylene	<	3.1e-7
TICS		
Hexane, 2-methyl-	N,J,M	6.9e-7
Pentane, 2,3-dimethyl-	N,J,M	7.3e-7
Butane, 1-chloro-	N,J,M	2.3e-7
Hexane, 3-methyl-	N,J,M	1.6e-6
Cyclohexene	N,J,M	4.1e-7
1-Heptene	N,J,M	2.2e-7
Cyclohexane, methyl-	N,J,M	4.5e-7
Hexane, 2,4-dimethyl-	N,J,M	4.5e-7
Cyclopentane, ethyl-	N,J,M	1.1e-7
Octane	N,J,M	1.1e-7
Decane	N,J,M	4.9e-7
Undecane	N,J,M	4.1e-6
Undecane, 5-methyl-	N,J,M	2.6e-6
Decane, 2,9-dimethyl-	N,J,M	2.6e-7
Dodecane	N,J,M	1.3e-4
Undecane, 2,6-dimethyl-	N,J,M	4.5e-7
Cyclohexane, hexyl-	N,J,M	2.4e-7
Tridecane	N,J,M	1.1e-5
Tetradecane	N,J,M	3.8e-6
Pentane, 3,3-dimethyl-		
Pentane, 3-ethyl-		
Cyclopentane, 1,2-dimethyl-		

Table B-6. 0031-END-1.

VOST SAMPLING DATA SHEET

Site:	HLLWE Offgas Tie-in	Run No.:	0031-END-1	Meter Box No.:	1
Project:	01-1062-01-0866	Run Type:	Test	Y-factor:	0.998
Date:	06/20/01	$P_{bar.}$, in. Hg:	25.297	Operator:	RW,FE,JA

VOST Tube Sample Numbers	Leak Check Rate (L/min)	Leak Check @ vacuum (in. Hg)	Sampling Rate (L/min)	Sampling Time (24 hr)	Sampling Time (min.)	Probe Temp. (°C)	Condenser Temp. (°C)	Meter Temp. (°C)	Meter Volume (L)	Pump Vacuum (in. Hg)
Set 1	Pretest		Target:	14:00	0	130	11.0	31	0.000	13.0
A-3409	0.001	16	1	14:05	5	130	10.0	31	4.788	13.0
A-3410				14:10	10	130	10.0	31	9.586	13.0
A-3411				14:15	15	130	11.0	33	14.413	13.0
				14:20	20	130	11.0	33	19.260	13.0
	Post-test			14:25	25	130	11.0	34	24.164	13.0
	0.003	16	Total	0:25	25				24.164	Max:
			Average			130	10.7	32		13.0
Set 2	Pretest		Target:	14:36	0	130	10.0	34	0.000	12.0
A-3412	0.000	16	1	14:41	5	130	10.0	35	4.994	12.0
A-3413				14:46	10	130	10.0	35	10.001	12.0
A-3414				14:51	15	130	10.0	35	15.128	12.0
				14:56	20	130	10.0	36	20.296	12.0
	Post-test			15:00	24	130	10.0	35	24.452	12.0
	0.008	16	Total	0:24	24				24.452	Max:
			Average			130	10.0	35		12.0
Set 3	Pretest		Target:	15:10	0	130	12.0	35	0.000	5.0
A-3415	0.001	16	1	15:15	5	130	11.0	35	1.909	5.0
A-3416				15:20	10	130	11.0	35	3.721	5.0
A-3417				15:25	15	130	11.0	35	5.650	5.0
				15:30	20	130	11.0	35	7.605	5.0
				15:35	25	130	11.0	35	9.514	5.0
				15:40	30	130	11.0	35	11.410	5.0
				15:45	35	130	11.0	35	13.348	5.0
				15:50	40	130	11.0	35	15.321	5.0
				15:55	45	130	11.0	35	17.238	5.0
				16:00	50	130	11.0	35	19.154	5.0
				16:05	55	130	11.0	35	21.118	5.0
	Post-test			16:10	60	130	12.0	35	23.165	5.0
	0.000	6		16:15	65	130	12.0	35	24.206	5.0
			Total	1:05	65				24.206	Max:
			Average			130	11.2	35		5.0
Set 4	Pretest		Target:	16:29	0	130	11.0	31	0.000	4.0
A-3418	0.000	5	1	16:34	5	130	11.0	31	2.646	4.0
A-3419				16:39	10	130	11.0	31	5.400	4.0
A-3420				16:44	15	130	11.0	32	7.965	4.0
				16:49	20	130	11.0	33	10.607	4.0
				16:54	25	130	11.0	33	13.270	4.0
				16:59	30	130	11.0	34	15.873	4.0
				17:04	35	130	11.0	34	18.500	4.0
				17:09	40	130	12.0	34	21.135	4.0
	Post-test			17:14	45	130	11.0	35	23.825	4.0
	0.000	5		17:15	46	130	11.0	35	24.404	4.0
			Total	0:46	46				24.404	Max:
			Average			130	11.1	33		4.0

Condensate	**Tenax Rinse:**	**Anasorb Rinse:**
A-3421	NA	NA
Final Condensate Volume:	Tenax Rinse Vol.:	Anasorb Rinse Vol.:
40 mL	NA mL	NA mL

ADDITIONAL INPUTS

	Symbol	Units	Set 1	Set 2	Set 3	Set 4	Average
Average Dry Oxygen Concentration	Co2	%	20.5	20.5	20.5	20.5	20.5
Process Gas Flow (dry, STP) @ 68°F	Qsd	dscm/sec	0.330	0.330	0.330	0.330	0.330

CALCULATED SAMPLING PARAMETERS

	Symbol	Units	Set 1	Set 2	Set 3	Set 4	Net
Sample Volume @ Standard Conditions	VmStd	dsL	19.577	19.629	19.431	19.718	78.355
VmStd=17.647 * Y * Pbar * Vm/(Fm + 460)							
Avg. Actual Sampling Rate, Qm=Vm/min	Qm	L/min	0.967	1.019	0.372	0.531	0.722
Avg. Sampling Rate, QmStd=VmStd/min	QmStd	dsL/min	0.783	0.818	0.299	0.429	0.582

Table B-6. 0031-END-1.

CONCENTRATIONS
micrograms per dry standard cubic meter

Project:	01-1062-01-	Lab Report Date:	08/20/01
Run Date:	6/20/2001	Lab Report Status:	Final
Run Identification:	0031-END-1		

Analyte	Run Total Flag	µg/dscm
Acetone	B	9.2e1
Acrylonitrile	<	3.6e1
Benzene	<	3.1e0
Bromobenzene	<	1.5e0
Bromochloromethane	<	1.9e0
Bromodichloromethane	<	1.5e0
Bromoform	<	2.3e0
Bromomethane	<,J	2.9e0
2-Butanone	<,J	1.1e1
n-Butylbenzene	<	1.9e0
sec-Butylbenzene	<	1.1e0
tert-Butylbenzene	<	1.8e0
Carbon disulfide	<	1.5e1
Carbon tetrachloride	<	2.0e0
Chlorobenzene	<,J	1.2e0
Chlorodibromomethane	<	1.9e0
Chloroethane	<,J	2.6e0
Chloroform	<	5.1e0
Chloromethane	<	3.7e1
2-Chlorotoluene	<	7.5e-1
4-Chlorotoluene	<	7.5e-1
1,2-Dibromo-3-chloropropane	<	3.6e0
1,2-Dibromoethane	<	2.6e0
Dibromomethane	<	2.2e0
1,2-Dichlorobenzene	<	2.3e0
1,3-Dichlorobenzene	<	1.3e0
1,4-Dichlorobenzene	<	1.8e0
Dichlorodifluoromethane	<,J	2.0e0
1,1-Dichloroethane	<	1.9e0
1,2-Dichloroethane	<,J	2.0e0
1,1-Dichloroethene	<,J	2.3e0
cis-1,2-Dichloroethene	<	1.9e0
trans-1,2-Dichloroethene	<	2.0e0
1,2-Dichloropropane	<,J	1.7e0
1,3-Dichloropropane	<	2.2e0
2,2-Dichloropropane	<	2.0e0
1,1-Dichloropropene	<	2.3e0
cis-1,3-Dichloropropene	<	1.7e0
trans-1,3-Dichloropropene	<	1.9e0
Ethylbenzene	<	1.2e0
Hexachlorobutadiene	<	2.8e0
2-Hexanone	<	7.1e0
Isopropylbenzene	<	8.9e-1
p-Isopropyltoluene	<	1.4e0
Methylene chloride	B	2.2e1
4-Methyl-2-pentanone	<	7.5e0
Naphthalene	<	2.7e0

Table B-6. 0031-END-1.

CONCENTRATIONS
micrograms per dry standard cubic meter

Project:	01-1062-01-	Lab Report Date:	08/20/01
Run Date:	6/20/2001	Lab Report Status:	Final
Run Identification:	0031-END-1		

Analyte	Run Total Flag	µg/dscm
n-Propylbenzene	<	8.4e-1
Styrene	<	1.0e0
1,1,1,2-Tetrachloroethane	<	1.3e0
1,1,2,2-Tetrachloroethane	<	2.8e0
Tetrachloroethene	<	1.9e0
Toluene	<,J	3.6e0
1,2,3-Trichlorobenzene	<	2.7e0
1,2,4-Trichlorobenzene	<	2.8e0
1,1,1-Trichloroethane	<	2.4e0
1,1,2-Trichloroethane	<	2.2e0
Trichloroethene	<	2.0e0
Trichlorofluoromethane	<,J	2.0e0
1,2,3-Trichloropropane	<	3.1e0
1,2,4-Trimethylbenzene	<	1.3e0
1,3,5-Trimethylbenzene	<	7.5e-1
Vinyl chloride	<,J	2.3e0
m-Xylene & p-Xylene	<	5.6e0
o-Xylene	<,J	1.0e0
TICs		
Pentane, 3,3-dimethyl-	N,J,M	7.5e-1
Hexane, 2-methyl-	N,J,M	4.0e0
Pentane, 2,3-dimethyl-	N,J,M	4.0e-1
Hexane, 3-methyl-	N,J,M	9.7e0
Cyclohexene	N,J,M	4.6e-1
Cyclobutane, ethenyl-	N,J,M	1.5e0
Cyclopentane, 1,2-dimethyl-, t	N,J,M	1.0e0
Cyclohexane, methyl-	N,J,M	2.6e0
Hexane, 2,4-dimethyl-	N,J,M	2.3e0
Cyclopentane, ethyl-	N,J,M	5.2e-1
Methane, trichloronitro-	N,J,M	4.6e0
Benzonitrile	N,J,M	2.4e0
Undecane	N,J,M	6.4e0
Undecane, 5-methyl-	N,J,M	2.3e0
Dodecane	N,J,M	3.3e2
Tridecane	N,J,M	4.0e1
Tetradecane	N,J,M	1.3e1
Hexadecane	N,J,M	2.7e0
Pentane, 3-ethyl-		
Cyclopentane, 1,2-dimethyl-		

Table B-9. 0031-END-1.

MASS FLOW RATE
grams per second

Project:	01-1062-01-0866	Lab Report Date:	08/20/01
Run Date:	6/20/2001	Lab Report Status:	Final
Run Identification:	0031-END-1		

Analyte	Run Total Flag	g/sec
Acetone	B	3.0e-5
Acrylonitrile	<	1.2e-5
Benzene	<	1.0e-6
Bromobenzene	<	5.0e-7
Bromochloromethane	<	6.3e-7
Bromodichloromethane	<	5.0e-7
Bromoform	<	7.6e-7
Bromomethane	<,J	9.7e-7
2-Butanone	<,J	3.7e-6
n-Butylbenzene	<	6.3e-7
sec-Butylbenzene	<	3.6e-7
tert-Butylbenzene	<	5.9e-7
Carbon disulfide	<	5.0e-6
Carbon tetrachloride	<	6.7e-7
Chlorobenzene	<,J	4.0e-7
Chlorodibromomethane	<	6.3e-7
Chloroethane	<,J	8.4e-7
Chloroform	<	1.7e-6
Chloromethane	<	1.2e-5
2-Chlorotoluene	<	2.5e-7
4-Chlorotoluene	<	2.5e-7
1,2-Dibromo-3-chloropropane	<	1.2e-6
1,2-Dibromoethane	<	8.4e-7
Dibromomethane	<	7.2e-7
1,2-Dichlorobenzene	<	7.6e-7
1,3-Dichlorobenzene	<	4.2e-7
1,4-Dichlorobenzene	<	5.9e-7
Dichlorodifluoromethane	<,J	6.7e-7
1,1-Dichloroethane	<	6.3e-7
1,2-Dichloroethane	<,J	6.7e-7
1,1-Dichloroethene	<,J	7.6e-7
cis-1,2-Dichloroethene	<	6.3e-7
trans-1,2-Dichloroethene	<	6.7e-7
1,2-Dichloropropane	<,J	5.5e-7
1,3-Dichloropropane	<	7.2e-7
2,2-Dichloropropane	<	6.7e-7
1,1-Dichloropropene	<	7.6e-7
cis-1,3-Dichloropropene	<	5.5e-7
trans-1,3-Dichloropropene	<	6.3e-7
Ethylbenzene	<	3.9e-7
Hexachlorobutadiene	<	9.3e-7
2-Hexanone	<	2.4e-6
Isopropylbenzene	<	2.9e-7
p-Isopropyltoluene	<	4.6e-7
Methylene chloride	B	7.2e-6
4-Methyl-2-pentanone	<	2.5e-6
Naphthalene	<	8.8e-7

Table B-9. 0031-END-1.

MASS FLOW RATE
grams per second

Project:	01-1062-01-0866	Lab Report Date:	08/20/01
Run Date:	6/20/2001	Lab Report Status:	Final
Run Identification:	0031-END-1		

Analyte	Run Total Flag	Run Total g/sec
n-Propylbenzene	<	2.8e-7
Styrene	<	3.3e-7
1,1,1,2-Tetrachloroethane	<	4.2e-7
1,1,2,2-Tetrachloroethane	<	9.3e-7
Tetrachloroethene	<	6.3e-7
Toluene	<,J	1.2e-6
1,2,3-Trichlorobenzene	<	8.8e-7
1,2,4-Trichlorobenzene	<	9.3e-7
1,1,1-Trichloroethane	<	8.0e-7
1,1,2-Trichloroethane	<	7.2e-7
Trichloroethene	<	6.7e-7
Trichlorofluoromethane	<,J	6.7e-7
1,2,3-Trichloropropane	<	1.0e-6
1,2,4-Trimethylbenzene	<	4.2e-7
1,3,5-Trimethylbenzene	<	2.5e-7
Vinyl chloride	<,J	7.6e-7
m-Xylene & p-Xylene	<	1.9e-6
o-Xylene	<,J	3.3e-7
TICs		
Pentane, 3,3-dimethyl-	N,J,M	2.5e-7
Hexane, 2-methyl-	N,J,M	1.3e-6
Pentane, 2,3-dimethyl-	N,J,M	1.3e-7
Hexane, 3-methyl-	N,J,M	3.2e-6
Cyclohexene	N,J,M	1.5e-7
Cyclobutane, ethenyl-	N,J,M	5.0e-7
Cyclopentane, 1,2-dimethyl-, t	N,J,M	3.3e-7
Cyclohexane, methyl-	N,J,M	8.4e-7
Hexane, 2,4-dimethyl-	N,J,M	7.6e-7
Cyclopentane, ethyl-	N,J,M	1.7e-7
Methane, trichloronitro-	N,J,M	1.5e-6
Benzonitrile	N,J,M	8.0e-7
Undecane	N,J,M	2.1e-6
Undecane, 5-methyl-	N,J,M	7.6e-7
Dodecane	N,J,M	1.1e-4
Tridecane	N,J,M	1.3e-5
Tetradecane	N,J,M	4.2e-6
Hexadecane	N,J,M	8.8e-7
Pentane, 3-ethyl-		
Cyclopentane, 1,2-dimethyl-		

Table B-7. 0031-STRT-2.

VOST SAMPLING DATA SHEET

Site:	HLLWE Offgas Tie-in	Run No.:	0031-STRT-2	Meter Box No.:	2
Project:	01-1062-01-0866	Run Type:	Test	Y-factor:	1.005
Date:	06/21/01	P_{bar}, in. Hg:	25.210	Operator:	RW,FE

VOST Tube Sample Numbers	Leak Check Rate (L/min)	Leak Check @ vacuum (in. Hg)	Sampling Rate (L/min)	Sampling Time (24 hr)	Sampling Time (min.)	Probe Temp. (°C)	Condenser Temp. (°C)	Meter Temp. (°C)	Meter Volume (L)	Pump Vacuum (in. Hg)
Set 1	Pretest		Target:	8:15	0	130	5.0	18	0.000	6.0
A-3379	0.008	6	1	8:20	5	130	6.0	20	2.137	6.0
A-3380				8:25	10	130	9.0	20	4.245	5.0
A-3381				8:30	15	130	8.0	21	6.361	5.0
				8:35	20	130	9.0	22	8.488	5.0
				8:40	25	130	8.0	23	10.598	5.0
				8:45	30	130	8.0	23	12.765	5.0
				8:50	35	130	8.0	24	14.885	5.0
				8:55	40	130	8.0	24	17.045	5.0
				9:00	45	130	9.0	25	19.141	5.0
				9:05	50	130	9.0	26	21.274	5.0
	Post-test			9:10	55	130	9.0	26	23.368	5.0
	0.007	6		9:12	57	130	9.0	26	24.311	5.0
			Total	0:57	57				24.311	Max:
			Average			130	8.1	23		6.0
Set 2	Pretest		Target:	9:27	0	130	10.0	22	0.000	6.0
A-3382	0.000	15	1	9:32	5	130	10.0	22	3.476	6.0
A-3383				9:37	10	130	10.0	22	6.021	6.0
A-3384				9:42	15	130	11.0	24	9.148	4.0
				9:47	20	130	11.0	25	11.758	4.5
				9:52	25	130	12.0	25	14.601	4.5
				9:57	30	130	13.0	26	17.682	4.5
				10:02	35	130	13.0	26	20.446	4.5
	Post-test			10:07	40	130	11.0	27	23.445	4.5
	0.000	15		10:08	41	130	11.0	27	24.060	4.5
			Total	0:41	41				24.060	Max:
			Average			130	11.2	25		6.0
Set 3	Pretest		Target:	10:19	0	130	10.0	31	0.000	5.0
A-3385	0.006	15		10:24	5	130	10.0	31	2.407	5.0
A-3386				10:29	10	130	10.0	31	5.233	5.0
A-3387				10:34	15	130	10.0	31	8.131	5.0
				10:39	20	130	10.0	31	10.751	5.0
				10:44	25	130	10.0	31	12.879	5.0
				10:49	30	130	10.0	31	16.204	5.0
				10:54	35	130	10.0	31	19.033	5.0
	Post-test			10:59	40	130	11.0	32	21.853	5.0
	0.006	15		11:04	45	130	11.0	32	24.106	5.0
			Total	0:45	45				24.106	Max:
			Average			130	10.2	31		5.0
Set 4	Pretest		Target:	11:12	0	130	10.0	31	0.000	5.0
A-3388	0.003	15		11:17	5	130	10.0	31	2.904	5.0
A-3389				11:22	10	130	10.0	31	5.259	5.0
A-3390				11:27	15	130	10.0	31	7.951	5.0
				11:32	20	130	10.0	31	10.780	5.0
				11:37	25	130	10.0	31	13.986	5.0
				11:42	30	130	10.0	31	16.832	5.0
				11:47	35	130	10.0	31	20.786	5.0
	Post-test			11:52	40	130	11.0	32	24.240	5.0
	0.003	15	Total	0:40	40				24.240	Max:
			Average			130	10.1	31		5.0

Condensate	**Tenax Rinse:**	**Anasorb Rinse:**
A-3391	NA	NA
Final Condensate Volume:	Tenax Rinse Vol.:	Anasorb Rinse Vol.:
40 mL	NA mL	NA mL

ADDITIONAL INPUTS

	Symbol	Units	Set 1	Set 2	Set 3	Set 4	Average
Average Dry Oxygen Concentration	Co2	%	20.5	20.5	20.5	20.5	20.5
Process Gas Flow (dry, STP) @ 68°F	Qsd	dscm/sec	0.330	0.330	0.330	0.330	0.330

CALCULATED SAMPLING PARAMETERS

	Symbol	Units	Set 1	Set 2	Set 3	Set 4	Net
Sample Volume @ Standard Conditions	VmStd	dsL	20.383	20.059	19.662	19.777	79.881
VmStd=17.647 * Y * Pbar * Vm/(Fm + 460)							
Avg. Actual Sampling Rate, Qm=Vm/min	Qm	L/min	0.427	0.587	0.536	0.606	0.539
Avg. Sampling Rate, QmStd=VmStd/min	QmStd	dsL/min	0.358	0.489	0.437	0.494	0.445

Table B-7. 0031-STRT-2.

CONCENTRATIONS

micrograms per dry standard cubic meter

Project:	01-1062-01-	Lab Report Date:	08/20/01
Run Date:	6/21/2001	Lab Report Status:	Final
Run Identification:	0031-STRT-2		

Analyte	Run Total Flag	µg/dscm
Acetone	J,B	6.3e1
Acrylonitrile	<	3.5e1
Benzene	<,J	2.8e0
Bromobenzene	<	1.5e0
Bromochloromethane	<	1.9e0
Bromodichloromethane	<	1.5e0
Bromoform	<	2.3e0
Bromomethane	<,J	1.9e0
2-Butanone	<,J	1.1e1
n-Butylbenzene	<	1.9e0
sec-Butylbenzene	<	1.1e0
tert-Butylbenzene	<	1.8e0
Carbon disulfide	<	1.6e1
Carbon tetrachloride	<	2.0e0
Chlorobenzene	<	1.2e0
Chlorodibromomethane	<	1.9e0
Chloroethane	<,J	2.1e0
Chloroform	<	4.1e0
Chloromethane	<,J	1.5e1
2-Chlorotoluene	<	7.4e-1
4-Chlorotoluene	<	7.4e-1
1,2-Dibromo-3-chloropropane	<	3.5e0
1,2-Dibromoethane	<	2.5e0
Dibromomethane	<	2.1e0
1,2-Dichlorobenzene	<	2.3e0
1,3-Dichlorobenzene	<	1.3e0
1,4-Dichlorobenzene	<	1.8e0
Dichlorodifluoromethane	<	2.5e0
1,1-Dichloroethane	<	1.9e0
1,2-Dichloroethane	<	2.0e0
1,1-Dichloroethene	<,J	2.0e0
cis-1,2-Dichloroethene	<	1.9e0
trans-1,2-Dichloroethene	<	2.0e0
1,2-Dichloropropane	<	1.6e0
1,3-Dichloropropane	<	2.1e0
2,2-Dichloropropane	<	2.0e0
1,1-Dichloropropene	<	2.3e0
cis-1,3-Dichloropropene	<	1.6e0
trans-1,3-Dichloropropene	<	1.9e0
Ethylbenzene	<	1.2e0
Hexachlorobutadiene	<	2.8e0
2-Hexanone	<	7.0e0
Isopropylbenzene	<	8.8e-1
p-Isopropyltoluene	<	1.4e0
Methylene chloride	<,B	1.4e1
4-Methyl-2-pentanone	<	7.4e0
Naphthalene	<	2.6e0

Table B-7. 0031-STRT-2.

CONCENTRATIONS
micrograms per dry standard cubic meter

Project:	01-1062-01-	Lab Report Date:	08/20/01
Run Date:	6/21/2001	Lab Report Status:	Final
Run Identification:	0031-STRT-2		

Analyte	Run Total Flag	µg/dscm
n-Propylbenzene	<	8.3e-1
Styrene	<	9.8e-1
1,1,1,2-Tetrachloroethane	<	1.3e0
1,1,2,2-Tetrachloroethane	<	2.8e0
Tetrachloroethene	<	1.9e0
Toluene	<,J	3.8e0
1,2,3-Trichlorobenzene	<	2.6e0
1,2,4-Trichlorobenzene	<	2.8e0
1,1,1-Trichloroethane	<	2.4e0
1,1,2-Trichloroethane	<	2.1e0
Trichloroethene	<	2.0e0
Trichlorofluoromethane	<,J	2.0e0
1,2,3-Trichloropropane	<	3.0e0
1,2,4-Trimethylbenzene	<	1.3e0
1,3,5-Trimethylbenzene	<	7.4e-1
Vinyl chloride	<,J	1.6e0
m-Xylene & p-Xylene	<	5.5e0
o-Xylene	<	9.8e-1
TICs		
Hexane, 2-methyl-	N,J,M	3.8e0
Pentane, 2,3-dimethyl-	N,J,M	1.4e0
Hexane, 3-methyl-	N,J,M	3.4e0
Pentane, 3-ethyl-	N,J,M	4.3e-1
Cyclohexene	N,J,M	2.3e0
Cyclopentane, 1,2-dimethyl-	N,J,M	6.6e-1
Cyclohexane, methyl-	N,J,M	2.5e0
Hexane, 2,4-dimethyl-	N,J,M	2.5e0
Cyclopentane, ethyl-	N,J,M	4.5e-1
Benzonitrile	N,J,M	9.0e-1
Tridecane	N,J,M	1.0e0
Undecane	N,J,M	3.0e0
Decane, 2,2,5-trimethyl-	N,J,M	7.5e-1
Undecane, 5-methyl-	N,J,M	2.6e0
Dodecane	N,J,M	2.8e2
Dodecane, 6-methyl-	N,J,M	6.5e-1
Undecane, 2,6-dimethyl-	N,J,M	5.8e-1
Tridecane	N,J,M	3.0e1
Tetradecane	N,J,M	1.2e1
Pentane, 3,3-dimethyl-		

Table B-7. 0031-STRT-2.

MASS FLOW RATE
grams per second

Project:	01-1062-01-0866	Lab Report Date:	08/20/01
Run Date:	6/21/2001	Lab Report Status:	Final
Run Identification:	0031-STRT-2		

Analyte	Run Total Flag	g/sec
Acetone	J,B	2.1e-5
Acrylonitrile	<	1.2e-5
Benzene	<,J	9.1e-7
Bromobenzene	<	5.0e-7
Bromochloromethane	<	6.2e-7
Bromodichloromethane	<	5.0e-7
Bromoform	<	7.4e-7
Bromomethane	<,J	6.2e-7
2-Butanone	<,J	3.7e-6
n-Butylbenzene	<	6.2e-7
sec-Butylbenzene	<	3.5e-7
tert-Butylbenzene	<	5.8e-7
Carbon disulfide	<	5.4e-6
Carbon tetrachloride	<	6.6e-7
Chlorobenzene	<	3.9e-7
Chlorodibromomethane	<	6.2e-7
Chloroethane	<,J	7.0e-7
Chloroform	<	1.4e-6
Chloromethane	<,J	5.0e-6
2-Chlorotoluene	<	2.4e-7
4-Chlorotoluene	<	2.4e-7
1,2-Dibromo-3-chloropropane	<	1.2e-6
1,2-Dibromoethane	<	8.3e-7
Dibromomethane	<	7.0e-7
1,2-Dichlorobenzene	<	7.4e-7
1,3-Dichlorobenzene	<	4.1e-7
1,4-Dichlorobenzene	<	5.8e-7
Dichlorodifluoromethane	<	8.3e-7
1,1-Dichloroethane	<	6.2e-7
1,2-Dichloroethane	<	6.6e-7
1,1-Dichloroethene	<,J	6.6e-7
cis-1,2-Dichloroethene	<	6.2e-7
trans-1,2-Dichloroethene	<	6.6e-7
1,2-Dichloropropane	<	5.4e-7
1,3-Dichloropropane	<	7.0e-7
2,2-Dichloropropane	<	6.6e-7
1,1-Dichloropropene	<	7.4e-7
cis-1,3-Dichloropropene	<	5.4e-7
trans-1,3-Dichloropropene	<	6.2e-7
Ethylbenzene	<	3.8e-7
Hexachlorobutadiene	<	9.1e-7
2-Hexanone	<	2.3e-6
Isopropylbenzene	<	2.9e-7
p-Isopropyltoluene	<	4.5e-7
Methylene chloride	<,B	4.5e-6
4-Methyl-2-pentanone	<	2.4e-6
Naphthalene	<	8.7e-7

Table B-7. 0031-STRT-2.

MASS FLOW RATE
grams per second

Project:	01-1062-01-0866	Lab Report Date:	08/20/01
Run Date:	6/21/2001	Lab Report Status:	Final
Run Identification:	0031-STRT-2		

Analyte	Run Total Flag	Run Total g/sec
n-Propylbenzene	<	2.7e-7
Styrene	<	3.2e-7
1,1,1,2-Tetrachloroethane	<	4.1e-7
1,1,2,2-Tetrachloroethane	<	9.1e-7
Tetrachloroethene	<	6.2e-7
Toluene	<,J	1.2e-6
1,2,3-Trichlorobenzene	<	8.7e-7
1,2,4-Trichlorobenzene	<	9.1e-7
1,1,1-Trichloroethane	<	7.8e-7
1,1,2-Trichloroethane	<	7.0e-7
Trichloroethene	<	6.6e-7
Trichlorofluoromethane	<,J	6.6e-7
1,2,3-Trichloropropane	<	9.9e-7
1,2,4-Trimethylbenzene	<	4.1e-7
1,3,5-Trimethylbenzene	<	2.4e-7
Vinyl chloride	<,J	5.4e-7
m-Xylene & p-Xylene	<	1.8e-6
o-Xylene	<	3.2e-7
TICs		
Hexane, 2-methyl-	N,J,M	1.2e-6
Pentane, 2,3-dimethyl-	N,J,M	4.5e-7
Hexane, 3-methyl-	N,J,M	1.1e-6
Pentane, 3-ethyl-	N,J,M	1.4e-7
Cyclohexene	N,J,M	7.4e-7
Cyclopentane, 1,2-dimethyl-	N,J,M	2.2e-7
Cyclohexane, methyl-	N,J,M	8.3e-7
Hexane, 2,4-dimethyl-	N,J,M	8.3e-7
Cyclopentane, ethyl-	N,J,M	1.5e-7
Benzonitrile	N,J,M	3.0e-7
Tridecane	N,J,M	3.4e-7
Undecane	N,J,M	9.9e-7
Decane, 2,2,5-trimethyl-	N,J,M	2.5e-7
Undecane, 5-methyl-	N,J,M	8.7e-7
Dodecane	N,J,M	9.1e-5
Dodecane, 6-methyl-	N,J,M	2.1e-7
Undecane, 2,6-dimethyl-	N,J,M	1.9e-7
Tridecane	N,J,M	9.9e-6
Tetradecane	N,J,M	4.0e-6
Pentane, 3,3-dimethyl-		

Table B-8. 0031-END-2.

VOST SAMPLING DATA SHEET

Site:	HLLWE Offgas Tie-in	Run No.:	0031-END-2	Meter Box No.:	2
Project:	01-1062-01-0866	Run Type:	Test	Y-factor:	1.005
Date:	21-Jun-01	P_{bar}., in. Hg:	25.210	Operator:	fe/rw

VOST Tube Sample Numbers	Leak Check Rate (L/min)	Leak Check @ vacuum (in. Hg)	Sampling Rate (L/min)	Sampling Time (24 hr)	Sampling Time (min.)	Probe Temp. (°C)	Condenser Temp. (°C)	Meter Temp. (°C)	Meter Volume (L)	Pump Vacuum (in. Hg)
Set 1	Pretest		Target:	13:50	0	130	14.0	36	0.000	5.0
A-3428	0.003	15	1	13:55	5	130	15.0	36	2.913	5.0
A-3429				14:00	10	130	15.0	36	5.730	4.5
A-3430				14:05	15	130	16.0	36	8.442	4.5
				14:10	20	130	17.0	36	11.143	4.5
				14:15	25	130	14.0	36	13.890	4.5
				14:20	30	130	13.0	37	16.475	4.5
				14:25	35	130	13.0	37	19.112	4.5
				14:30	40	130	12.0	37	21.676	4.5
	Post-test			14:35	45	130	12.0	37	24.121	4.5
	0.000	15	Total	0:45	45				24.121	Max:
			Average			130	14.1	36		5.0
Set 2	Pretest		Target:	14:45	0	130	14.0	37	0	4.7
A-3431	0.003	15	1	14:50	5	130	13.0	37	2.884	4.8
A-3432				14:55	10	130	12.0	37	5.986	4.8
A-3433				15:00	15	130	13.0	37	8.994	4.8
				15:05	20	130	14.0	37	12.108	4.8
				15:10	25	130	13.0	38	16.982	4.8
				15:15	30	130	14.0	37	18.303	4.8
				15:20	35	130	13.0	37	21.394	4.8
	Post-test			15:25	40	130	13.0	37	25.561	4.8
	0.000	15	Total	0:40	40				25.561	Max:
			Average			130	13.2	37		4.8
Set 3	Pretest		Target:	15:34	0	130	15.0	37	0.000	4.8
A-3434	0.000	15		15:39	5	130	14.0	37	3.251	4.8
A-3435				15:44	10	130	13.0	38	6.003	4.8
A-3436				15:49	15	130	13.0	38	9.136	4.8
				15:54	20	130	14.0	38	11.487	4.8
				15:59	25	130	14.0	38	13.953	4.8
				16:04	30	130	14.0	38	16.616	4.8
				16:09	35	130	14.0	38	19.331	4.8
				16:14	40	130	14.0	38	22.039	4.8
	Post-test			16:18	44	130	14.0	38	24.214	4.8
	0.006	15	Total	0:44	44				24.214	Max:
			Average			130	13.9	38		4.8
Set 4	Pretest		Target:	16:26	0	130	15.0	38	0.000	4.0
A-3437	0.006	15		16:31	5	130	15.0	38	2.624	4.0
A-3438				16:36	10	130	15.0	38	5.801	4.0
A-3439				16:41	15	130	15.0	38	8.223	4.0
				16:46	20	130	15.0	39	10.998	4.0
				16:51	25	130	15.0	39	13.737	4.0
				16:56	30	130	15.0	39	16.501	4.0
				17:01	35	130	15.0	39	19.272	4.0
				17:06	40	130	15.0	40	22.038	4.0
	Post-test			17:10	44	130	15.0	40	24.227	4.0
	0.006	15	Total	0:44	44				24.227	Max:
			Average			130	15.0	39		4.0

Condensate	**Tenax Rinse:**		**Anasorb Rinse:**	
A-3440	NA		NA	
Final Condensate Volume:	Tenax Rinse Vol.:		Anasorb Rinse Vol.:	
40 mL	NA	mL	NA	mL

ADDITIONAL INPUTS

	Symbol	Units	Set 1	Set 2	Set 3	Set 4	Average
Average Dry Oxygen Concentration	Co2	%	20.5	20.5	20.5	20.5	20.5
Process Gas Flow (dry, STP) @ 68°F	Qsd	dscm/sec	0.330	0.330	0.330	0.330	0.330

CALCULATED SAMPLING PARAMETERS

	Symbol	Units	Set 1	Set 2	Set 3	Set 4	Net
Sample Volume @ Standard Conditions	VmStd	dsL	19.344	20.452	19.331	19.280	78.406
VmStd=17.647 * Y * Pbar * Vm/(Fm + 460)							
Avg. Actual Sampling Rate, Qm=Vm/min	Qm	L/min	0.536	0.639	0.550	0.551	0.569
Avg. Sampling Rate, QmStd=VmStd/min	QmStd	dsL/min	0.430	0.511	0.439	0.438	0.455

Table B-8. 0031-END-2.

CONCENTRATIONS

micrograms per dry standard cubic meter

Project:	01-1062-01-	Lab Report Date:	08/20/01
Run Date:	6/21/2001	Lab Report Status:	Final
Run Identification:	0031-END-2		

Analyte	Run Total Flag	µg/dscm
Acetone	<,J,B	4.8e1
Acrylonitrile	<	3.6e1
Benzene	<	2.6e0
Bromobenzene	<	1.5e0
Bromochloromethane	<	1.9e0
Bromodichloromethane	<	1.5e0
Bromoform	<	2.3e0
Bromomethane	J	2.6e0
2-Butanone	<	1.1e1
n-Butylbenzene	<	1.9e0
sec-Butylbenzene	<	1.1e0
tert-Butylbenzene	<	1.8e0
Carbon disulfide	<	8.2e0
Carbon tetrachloride	<,J	2.0e0
Chlorobenzene	<,J	1.2e0
Chlorodibromomethane	<	1.9e0
Chloroethane	<,J	2.0e0
Chloroform	<	5.0e0
Chloromethane	<,J	3.2e1
2-Chlorotoluene	<	7.5e-1
4-Chlorotoluene	<	7.5e-1
1,2-Dibromo-3-chloropropane	<	3.4e0
1,2-Dibromoethane	<	2.6e0
Dibromomethane	<	2.2e0
1,2-Dichlorobenzene	<	2.3e0
1,3-Dichlorobenzene	<	1.3e0
1,4-Dichlorobenzene	<	1.8e0
Dichlorodifluoromethane	<,J	2.0e0
1,1-Dichloroethane	<	1.9e0
1,2-Dichloroethane	<	2.0e0
1,1-Dichloroethene	<,J	2.0e0
cis-1,2-Dichloroethene	<	1.9e0
trans-1,2-Dichloroethene	<	2.2e0
1,2-Dichloropropane	<	1.7e0
1,3-Dichloropropane	<	2.2e0
2,2-Dichloropropane	<	2.0e0
1,1-Dichloropropene	<	2.3e0
cis-1,3-Dichloropropene	<	1.7e0
trans-1,3-Dichloropropene	<	1.9e0
Ethylbenzene	<	1.2e0
Hexachlorobutadiene	<	2.9e0
2-Hexanone	<	7.1e0
Isopropylbenzene	<	8.9e-1
p-Isopropyltoluene	<	1.4e0
Methylene chloride	<,J,B	5.5e0

Table B-8. 0031-END-2.

CONCENTRATIONS
micrograms per dry standard cubic meter

Project:	01-1062-01-	Lab Report Date:	08/20/01
Run Date:	6/21/2001	Lab Report Status:	Final
Run Identification:	0031-END-2		

Analyte	Run Total Flag	µg/dscm
4-Methyl-2-pentanone	<	7.5e0
Naphthalene	<	2.7e0
n-Propylbenzene	<	8.4e-1
Styrene	<	9.9e-1
1,1,1,2-Tetrachloroethane	<	1.3e0
1,1,2,2-Tetrachloroethane	<	2.9e0
Tetrachloroethene	<	1.9e0
Toluene	<,J	2.3e0
1,2,3-Trichlorobenzene	<	2.7e0
1,2,4-Trichlorobenzene	<	2.9e0
1,1,1-Trichloroethane	<	2.4e0
1,1,2-Trichloroethane	<	2.2e0
Trichloroethene	<	2.0e0
Trichlorofluoromethane	<,J	2.0e0
1,2,3-Trichloropropane	<	3.1e0
1,2,4-Trimethylbenzene	<	1.3e0
1,3,5-Trimethylbenzene	<	7.5e-1
Vinyl chloride	<,J	2.2e0
m-Xylene & p-Xylene	<	5.6e0
o-Xylene	<,J	9.8e-1
TICs		
Hexane, 2-methyl-	N,J,M	3.1e0
Pentane, 2,3-dimethyl-	N,J,M	1.8e0
Hexane, 3-methyl-	N,J,M	4.3e0
Pentane, 3-ethyl-	N,J,M	4.1e-1
Cyclohexene	N,J,M	3.3e-1
Cyclopentane, 1,2-dimethyl-, t	N,J,M	3.8e-1
Cyclohexane, methyl-	N,J,M	1.5e0
Hexane, 2,4-dimethyl-	N,J,M	1.2e0
Benzonitrile	N,J,M	6.0e-1
Undecane	N,J,M	1.5e0
Undecane, 5-methyl-	N,J,M	2.3e0
Dodecane	N,J,M	2.2e2
Undecane, 2,6-dimethyl-	N,J,M	1.1e0
Tridecane	N,J,M	4.0e1
Tetradecane	N,J,M	1.8e1
Cyclopentane, ethyl-		
Pentane, 3,3-dimethyl-		

Table B-8. 0031-END-2.

MASS FLOW RATE
grams per second

Project:	01-1062-01-0866	Lab Report Date:	08/20/01
Run Date:	6/21/2001	Lab Report Status:	Final
Run Identification:	0031-END-2		

Analyte	Run Total Flag	g/sec
Acetone	<,J,B	1.6e-5
Acrylonitrile	<	1.2e-5
Benzene	<	8.4e-7
Bromobenzene	<	5.0e-7
Bromochloromethane	<	6.3e-7
Bromodichloromethane	<	5.0e-7
Bromoform	<	7.6e-7
Bromomethane	J	8.4e-7
2-Butanone	<	3.7e-6
n-Butylbenzene	<	6.3e-7
sec-Butylbenzene	<	3.6e-7
tert-Butylbenzene	<	5.9e-7
Carbon disulfide	<	2.7e-6
Carbon tetrachloride	<,J	6.7e-7
Chlorobenzene	<,J	4.0e-7
Chlorodibromomethane	<	6.3e-7
Chloroethane	<,J	6.7e-7
Chloroform	<	1.6e-6
Chloromethane	<,J	1.1e-5
2-Chlorotoluene	<	2.5e-7
4-Chlorotoluene	<	2.5e-7
1,2-Dibromo-3-chloropropane	<	1.1e-6
1,2-Dibromoethane	<	8.4e-7
Dibromomethane	<	7.1e-7
1,2-Dichlorobenzene	<	7.6e-7
1,3-Dichlorobenzene	<	4.2e-7
1,4-Dichlorobenzene	<	5.9e-7
Dichlorodifluoromethane	<,J	6.7e-7
1,1-Dichloroethane	<	6.3e-7
1,2-Dichloroethane	<	6.7e-7
1,1-Dichloroethene	<,J	6.7e-7
cis-1,2-Dichloroethene	<	6.3e-7
trans-1,2-Dichloroethene	<	7.1e-7
1,2-Dichloropropane	<	5.5e-7
1,3-Dichloropropane	<	7.1e-7
2,2-Dichloropropane	<	6.7e-7
1,1-Dichloropropene	<	7.6e-7
cis-1,3-Dichloropropene	<	5.5e-7
trans-1,3-Dichloropropene	<	6.3e-7
Ethylbenzene	<	3.9e-7
Hexachlorobutadiene	<	9.7e-7
2-Hexanone	<	2.4e-6
Isopropylbenzene	<	2.9e-7
p-Isopropyltoluene	<	4.6e-7
Methylene chloride	<,J,B	1.8e-6

Table B-8. 0031-END-2.

MASS FLOW RATE
grams per second

Project:	01-1062-01-086	Lab Report Date:	08/20/01
Run Date:	6/21/2001	Lab Report Status:	Final
Run Identification:	0031-END-2		

Analyte	Run Total Flag	Run Total g/sec
4-Methyl-2-pentanone	<	2.5e-6
Naphthalene	<	8.8e-7
n-Propylbenzene	<	2.8e-7
Styrene	<	3.3e-7
1,1,1,2-Tetrachloroethane	<	4.2e-7
1,1,2,2-Tetrachloroethane	<	9.7e-7
Tetrachloroethene	<	6.3e-7
Toluene	<,J	7.6e-7
1,2,3-Trichlorobenzene	<	8.8e-7
1,2,4-Trichlorobenzene	<	9.7e-7
1,1,1-Trichloroethane	<	8.0e-7
1,1,2-Trichloroethane	<	7.1e-7
Trichloroethene	<	6.7e-7
Trichlorofluoromethane	<,J	6.7e-7
1,2,3-Trichloropropane	<	1.0e-6
1,2,4-Trimethylbenzene	<	4.2e-7
1,3,5-Trimethylbenzene	<	2.5e-7
Vinyl chloride	<,J	7.1e-7
m-Xylene & p-Xylene	<	1.9e-6
o-Xylene	<,J	3.2e-7
TICs		
Hexane, 2-methyl-	N,J,M	1.0e-6
Pentane, 2,3-dimethyl-	N,J,M	5.9e-7
Hexane, 3-methyl-	N,J,M	1.4e-6
Pentane, 3-ethyl-	N,J,M	1.3e-7
Cyclohexene	N,J,M	1.1e-7
Cyclopentane, 1,2-dimethyl-, t	N,J,M	1.3e-7
Cyclohexane, methyl-	N,J,M	5.0e-7
Hexane, 2,4-dimethyl-	N,J,M	4.0e-7
Benzonitrile	N,J,M	2.0e-7
Undecane	N,J,M	5.0e-7
Undecane, 5-methyl-	N,J,M	7.6e-7
Dodecane	N,J,M	7.1e-5
Undecane, 2,6-dimethyl-	N,J,M	3.5e-7
Tridecane	N,J,M	1.3e-5
Tetradecane	N,J,M	5.9e-6
Cyclopentane, ethyl-		
Pentane, 3,3-dimethyl-		

Table B-9. 0050-STRT-1.

0050 SAMPLING DATA SHEET FOR HLLWE TESTS

Site:	HLLWE Offgas Tie-in	Sampling Location:	MAN-OFG-73	Nozzle No.:	2-01	Est. ΔP:	0.15	Est. T_{stack}, °F:	255
Project:	01-1062-01-0866	Duct ID, inches:	12	Nozzle Size, in.:	0.3140	Est. K:	6.36	Est. v_s, ft/s:	28.4
Date:	6/7/2001	Static Pressure, in. WG:	-17.5	Pitot No.:	JM-2	Est. ΔH:	0.95	Operator(s):	FE,JA,RW
Run No.:	0050-STRT-1	Est. O_2, %:	20.5	Pitot Coeff.:	0.84	Est. DGM Temperature, °F			80
Run Type:	TEST	Est CO_2, %:	0	Meter Box No.	2	**Meter Box Leak Checks:**		Pitot:	PASS
P_{bar}., in. Hg:	25.200	Est. Moist., %:	1.3%	ΔH@:	1.5673	Pretest	0.010 cfm @		15 in. Hg
$T_{ambient}$, °F:	70	Impinger Box No.:	9	Y-factor:	1.0328			Pitot:	
DGM vol. Goal (m^3):	3.00	DGM vol. Goal (ft^3):	127.080	Min. ending DGM vol. (ft^3):	819.905	Post-test	0.010 cfm @		11 in. Hg

Sampling Time (min.)	Clock Time (24hr)	Velocity ΔP (in. WG)		Meter ΔH (in. WG)	Actual ΔH (in. WG)	Meter Volume (cubic feet)	TEMPERATURE (°F)						Pump Vacuum (in. Hg)	%I	COMMENTS
							Probe (if heated)	Stack	Meter In	Meter Out	Filter	Impinger Exit			
0	8:00	0.170	0.412	1.27		692.825	252	133	70	61	258	52	9.1	-	
10	8:10	0.170	0.412	1.28		699.423	251	134	78	64	258	45	9.2	92	
20	8:20	0.170	0.412	1.29		706.640	250	134	80	67	259	44	9.6	100	
30	8:30	0.160	0.400	1.21		713.400	252	134	81	68	259	44	10.1	96	
40	8:40	0.160	0.400	1.22		720.600	252	134	82	69	258	45	10.1	102	
50	8:50	0.160	0.400	1.22		727.830	253	134	83	70	258	45	10.1	103	
60	9:00	0.160	0.400	1.22		735.060	253	134	84	71	259	46	10.1	103	
70	9:10	0.160	0.400	1.22		742.270	249	134	84	72	258	47	10.1	102	
80	9:20	0.160	0.400	1.23		749.510	249	133	85	73	259	47	10.1	102	
90	9:30	0.160	0.400	1.23		756.760	249	133	86	74	258	48	10.1	102	
100	9:40	0.160	0.400	1.23		764.010	249	133	86	74	258	49	10.1	102	
110	9:50	0.160	0.400	1.23		771.270	252	133	88	75	258	49	10.1	102	
120	10:00	0.160	0.400	1.23		778.480	250	133	89	75	258	49	10.1	101	
130	10:10	0.160	0.400	1.23		785.690	251	133	89	77	259	51	10.1	101	
140	10:20	0.160	0.400	1.24		793.120	253	133	90	77	259	51	10.1	104	
150	10:30	0.160	0.400	1.24		800.398	255	133	90	78	258	52	10.1	102	
160	10:40	0.160	0.400	1.24		807.695	248	133	91	79	261	52	10.1	102	
170	10:50	0.160	0.400	1.24		814.890	252	133	91	79	258	53	10.1	101	
180	11:00	0.160	0.400	1.24		822.292	251	133	91	79	258	53	10.1	103	
Total	Total	ΔP_{avg}		Average		Total	Average Temperatures (°F)						Max.	Ave. %I	
180	3:00	0.162	0.402	1.24		129.467	251	133	85	73	258	49	10.1	101	

Table B-9. 0050-STRT-1.

0050 CONFIGURATION TRAIN COMPONENT DATA SHEET
for HLLWE OFFGAS SAMPLING

Site: HLLWE Offgas Tie-in

Date: 6/7/2001

Run No.: 0050-STRT-1

Impinger Box no.: 9

Component:	KO-1	Imp-1	Imp-2	Imp-3	Imp-4	Acid Scrub Section		
Type:	short stem	G-S		modified		short stem	modified	modified
Reagent:	None	**0.05M** H_2SO_4		**0.1N** NaOH		None	**2N** NaOH	Silica Gel
Nominal Contents:	Empty	100 mL		100 mL		Empty	**200** mL	300-400g
Post-test Wt., g:	559.8	662.0	669.7	719.5	680.7	582.2	694.2	791.5
Pre-test Wt., g:	559.9	665.3	667.4	720.1	680.7	566.7	709.4	766.3
Wt. Gain, g:	-0.1	-3.3	2.3	-0.6	0.0	15.5	-15.2	25.2
Post-test Volume:	0	100	100	100	100	0		
Pre-test Volume:	0	100	100	100	100	0		
Volume Gain:	0	0	0	0	0	0		
Post-test pH:				12.0	13.0		13.0	

Train Wt. Gain: 23.8

Train Vol. Gain: 0.0

Filter Lot #: T4208E

H_2SO_4 Lot #: 32060

NaOH Lot #: QCLAB-381

DI Water* Lot #: QCLAB-01

* used to dilute acid and caustic

O2% 20.5

CO2% 0

Record impinger change-out and other important information below:

Table B-9. 0050-STRT-1.

0050 FIELD DATA CALCULATIONS

Project:	01-1062-01-0866		
Run Date:	6/7/2001		
Run Identification:	0050-STRT-1		
PARAMETER	SYMBOL	UNITS	
Absolute Pressure in the Duct	Pabs	in. Hg	23.913
Average Duct Gas Temperature	Ts	R	593
Average Meter Temperature	Tm	R	539
Average Gas Oxygen Content	Co2,m	%	20.5
Average Gas Carbon Dioxide Content	Cco2,m	%	0.0
Total Impinger Weight Gain (water)	Ww	grams	23.8
Nozzle Area	An	ft^2	0.000538
Duct Area	As	ft^2	0.7854
Sample Volume	VmStd	dscf	110.729
Sample Volume (SI)	VmStdm	dscm	3.136
Average Sampling Rate	Qm	dscf/m	0.615
Volume of Water Vapor	VwStd	scf	1.122
Volume of Water Vapor (SI)	VwStdm	scm	0.0318
Moisture Fraction	Bws	-	0.010
Dry Gas Molecular Weight	Md	g/g-mol	28.82
Wet Gas Molecular Weight	Ms	g/g-mol	28.71
Gas Velocity at Nozzle	vn	ft/s	26.8
Gas Velocity at Nozzle (SI)	vnm	m/s	8.18
Average Gas Velocity	vncor	ft/s	22.64
Dry Offgas Flow Rate	Qsd	dscf/h	45,066
Dry Offgas Flow Rate (SI)	Qsdm	dscm/h	1,276
Actual Offgas Flow Rate	Q	acf/h	64,013
Intermediate Isokinetic Rate	Ii	%	101.3
Final Isokinetic Rate	**I**	**%**	**101.0**

Table B-9. 0050-STRT-1.

Project:	01-1062-01-0866
Run Date:	6/7/2001
Run Identification:	0050-STRT-1
Run Type:	TEST
Lab Report Date:	9/11/2001
Lab Report Status: (preliminary or final)	Final

0050 RESULTS

• without blank corrections

• final presentation should be rounded to two significant digits

	CONCENTRATIONS			MASS FLOW RATES		
	Actual (mg/acm)	Standard (mg/scm)	Dry Standard (mg/dscm)	mg/min	grams/sec	lb/h
Vapor Phase Species: Chloride (as HCl)	mg/acm B 6.5e-1	mg/scm B 9.2e-1	mg/dscm B 9.2e-1 ppmv B 6.1e-1	B 2.0e1	B 3.3e-4	B 2.6e-3
Chloride (as Cl2)	mg/acm < 6.5e-2	mg/scm < 9.2e-2	mg/dscm < 9.2e-2 ppmv < 3.1e-2	< 2.0e0	< 3.3e-5	< 2.6e-4
Fluoride	mg/acm < 9.0e-2	mg/scm < 1.3e-1	mg/dscm < 1.3e-1	< 2.7e0	< 4.5e-5	< 3.6e-4
Nitrate	mg/acm 2.7e0	mg/scm 3.8e0	mg/dscm 3.8e0	8.1e1	1.4e-3	1.1e-2
Nitrite	mg/acm < 3.6e-1	mg/scm < 5.1e-1	mg/dscm < 5.1e-1	< 1.1e1	< 1.8e-4	< 1.4e-3
Total Particulate				B 2.4e1	B 4.0e-4	B 3.1e-3

Table B-10. 0050-END-1.

0050 SAMPLING DATA SHEET FOR HLLWE TESTS

Site:	HLLWE Offgas Tie-in	Sampling Location:	MAN-OFG-73	Nozzle No.:	2-01	Est. ΔP:	0.15	Est. T_{stack}, °F:	255
Project:	01-1062-01-0866	Duct ID, inches:	12	Nozzle Size, in.:	0.3140	Est. K:	6.36	Est. v_s, ft/s:	28.5
Date:	6/7/2001	Static Pressure, in. WG:	-17.5	Pitot No.:	JM-2	Est. ΔH:	0.95	Operator(s):	FE/RW
Run No.:	0050-END-1	Est. O_2, %:	20.5	Pitot Coeff.:	0.84	Est. DGM Temperature, °F			80
Run Type:	TEST	Est CO_2, %:	0	Meter Box No.	2	**Meter Box Leak Checks:**		Pitot:	pass
P_{bar}., in. Hg:	25.200	Est. Moist., %:	1.3%	ΔH@:	1.5673	Pretest	0.000 cfm @		15 in. Hg
$T_{ambient}$, °F:	70	Impinger Box No.:	9	Y-factor:	1.0328			Pitot:	
DGM vol. Goal (m^3):	3.00	DGM vol. Goal (ft^3):	127.080	Min. ending DGM vol. (ft^3):	953.478	Post-test	0.000 cfm @		7.1 in. Hg

Sampling Time (min.)	Clock Time (24hr)	Velocity ΔP (in. WG)		Meter ΔH (in. WG)	Actual ΔH (in. WG)	Meter Volume (cubic feet)	TEMPERATURE (°F) Probe (if heated)	Stack	Meter In	Meter Out	Filter	Impinger Exit	Pump Vacuum (in. Hg)	%I_i	COMMENTS
0	14:05	0.150	0.387	1.30		826.398	252	133	95	82	260	49	7.2	-	
10	14:15	0.150	0.387	1.30		833.490	260	133	97	83	260	52	7.2	101	
20	14:25	0.150	0.387	1.30		840.853	254	133	98	84	263	54	7.2	105	
30	14:35	0.150	0.387	1.30		848.132	253	133	99	85	261	51	7.2	104	
40	14:45	0.150	0.387	1.30		855.329	253	133	99	85	263	53	7.2	103	
50	14:55	0.150	0.387	1.30		862.760	254	133	100	87	260	52	7.2	106	
60	15:05	0.150	0.387	1.30		870.115	255	133	99	87	261	53	7.2	105	
70	15:15	0.150	0.387	1.30		877.700	255	133	99	87	262	53	7.2	108	
80	15:25	0.150	0.387	1.30		884.820	253	133	99	87	261	54	7.2	101	
90	15:35	0.150	0.387	1.30		892.187	251	132	100	87	261	54	7.2	105	
100	15:45	0.150	0.387	1.30		899.530	251	132	100	87	261	55	7.2	104	
110	15:55	0.150	0.387	1.30		906.890	251	132	100	87	261	55	7.2	105	
120	16:05	0.150	0.387	1.30		914.230	252	132	101	88	261	55	7.2	104	
130	16:15	0.150	0.387	1.30		921.580	252	132	101	89	261	55	7.2	104	
140	16:25	0.150	0.387	1.30		928.824	252	133	100	88	260	55	7.2	103	
150	16:35	0.150	0.387	1.30		936.310	253	132	101	89	261	56	7.2	106	
160	16:45	0.150	0.387	1.30		943.673	253	132	101	88	257	52	7.2	104	
170	16:55	0.150	0.387	1.30		951.037	254	133	101	89	259	57	7.2	104	
180	17:05	0.150	0.387	1.30		958.412	254	132	101	89	259	57	7.2	104	
190	17:15	0.150	0.387	1.30		965.768	254	132	100	89	259	57	7.2	104	
195	17:20	0.150	0.387	1.30		969.463	254	132	100	88	260	59	7.1	105	END of TEST
Total	Total	ΔP_{avg}		Average		Total	Average Temperatures (°F)						Max.	Ave. %I_i	
195	3:15	0.150	0.387	1.30		143.065	253	133	100	87	261	54	7.2	104	

Table B-10. 0050-END-1.

0050 CONFIGURATION TRAIN COMPONENT DATA SHEET
for HLLWE OFFGAS SAMPLING

Site: HLLWE Offgas Tie-in

Date: 6/7/2001

Run No.: 0050-END-1

Impinger Box no.: 9

Component:	KO-1	Imp-1	Imp-2	Imp-3	Imp-4	Acid Scrub Section		
Type:	short stem	G-S		modified		short stem	modified	modified
Reagent:	None	**0.05M** H_2SO_4		**0.1N** NaOH		None	**2N** NaOH	Silica Gel
Nominal Contents:	Empty	100 mL		100 mL		Empty	**200** mL	300-400g
Post-test Wt., g:	560.0	660.2	670.5	695.4	702.8	568.9	689.8	792.3
Pre-test Wt., g:	559.8	666.5	668.5	681.0	718.2	564.1	693.7	762.0
Wt. Gain, g:	0.2	-6.3	2.0	14.4	-15.4	4.8	-3.9	30.3
Post-test Volume:	NA	100.0	100.0	100.0	100.0	0.0		
Pre-test Volume:	NA	100.0	100.0	100.0	100.0	0.0		
Volume Gain:	0.0	0.0	0.0	0.0	0.0	0.0		
Post-test pH:				13.0	12.0		12.0	

Train Wt. Gain	Train Vol. Gain
26.1	0.0

Filter Lot #: T4208E H_2SO_4 Lot #: 328060 NaOH Lot # 000381 DI Water* Lot #: QCLAB1

* used to dilute acid and caustic

O2% 20.5

CO2% 0

Record impinger change-out and other important information below:

Table B-10. 0050-END-1.

0050 FIELD DATA CALCULATIONS

Project:	01-1062-01-0866		
Run Date:	6/7/2001		
Run Identification:	0050-END-1		
PARAMETER	SYMBOL	UNITS	
Absolute Pressure in the Duct	Pabs	in. Hg	23.913
Average Duct Gas Temperature	Ts	R	592
Average Meter Temperature	Tm	R	553
Average Gas Oxygen Content	Co2,m	%	20.5
Average Gas Carbon Dioxide Content	Cco2,m	%	0.0
Total Impinger Weight Gain (water)	Ww	grams	26.1
Nozzle Area	An	ft^2	0.000538
Duct Area	As	ft^2	0.7854
Sample Volume	VmStd	dscf	119.218
Sample Volume (SI)	VmStdm	dscm	3.376
Average Sampling Rate	Qm	dscf/m	0.611
Volume of Water Vapor	VwStd	scf	1.231
Volume of Water Vapor (SI)	VwStdm	scm	0.0348
Moisture Fraction	Bws	-	0.010
Dry Gas Molecular Weight	Md	g/g-mol	28.82
Wet Gas Molecular Weight	Ms	g/g-mol	28.71
Gas Velocity at Nozzle	vn	ft/s	25.8
Gas Velocity at Nozzle (SI)	vnm	m/s	7.87
Average Gas Velocity	vncor	ft/s	21.80
Dry Offgas Flow Rate	Qsd	dscf/h	43,448
Dry Offgas Flow Rate (SI)	Qsdm	dscm/h	1,230
Actual Offgas Flow Rate	Q	acf/h	61,639
Intermediate Isokinetic Rate	Ii	%	104.4
Final Isokinetic Rate	**I**	**%**	**104.1**

Table B-10. 0050-END-1.

Project:	01-1062-01-0866
Run Date:	6/7/2001
Run Identification:	0050-END-1
Run Type:	TEST
Lab Report Date:	9/11/2001
Lab Report Status: (preliminary or final)	Final

0050 RESULTS

• without blank corrections

• final presentation should be rounded to two significant digits

	CONCENTRATIONS			MASS FLOW RATES		
	Actual (mg/acm)	Standard (mg/scm)	Dry Standard (mg/dscm)	mg/min	grams/sec	lb/h
Vapor Phase Species:	mg/acm	mg/scm	mg/dscm			
Chloride (as HCl)	B 6.1e-1	B 8.5e-1	B 8.6e-1 ppmv B 5.7e-1	B 1.8e1	B 2.9e-4	B 2.3e-3
Chloride (as Cl2)	mg/acm B 1.2e-1	mg/scm B 1.7e-1	mg/dscm B 1.7e-1 ppmv B 5.7e-2	B 3.5e0	B 5.8e-5	B 4.6e-4
Fluoride	mg/acm < 8.4e-2	mg/scm < 1.2e-1	mg/dscm < 1.2e-1	< 2.4e0	< 4.0e-5	< 3.2e-4
Nitrate	mg/acm 2.2e0	mg/scm 3.0e0	mg/dscm 3.1e0	6.3e1	1.1e-3	8.4e-3
Nitrite	mg/acm < 7.9e-1	mg/scm < 1.1e0	mg/dscm < 1.1e0	< 2.3e1	< 3.8e-4	< 3.1e-3
Total Particulate				B 1.8e1	B 2.9e-4	B 2.3e-3

Table B-11. 0050-STRT-2.

0050 SAMPLING DATA SHEET FOR HLLWE TESTS

Site:	HLLWE Offgas Tie-in	Sampling Location:	MAN-OFG-73	Nozzle No.:	2-01	Est. ΔP: 0.15	Est. T_{stack}, °F: 133
Project:	01-1062-01-0866	Duct ID, inches:	12	Nozzle Size, in.:	0.3140	Est. K: 7.66	Est. v_s, ft/s: 26.0
Date:	6/11/2001	Static Pressure, in. WG:	-17.5	Pitot No.:	JM-2	Est. ΔH: 1.15	Operator(s): RW, FE
Run No.:	0050-STRT-2	Est. O_2, %:	20.5	Pitot Coeff.:	0.84	Est. DGM Temperature, °F	80
Run Type:	TEST	Est CO_2, %:	0	Meter Box No.	1	Pitot Leak Check: pass X fail	
$P_{bar.}$, in. Hg:	25.009	Est. Moist., %:	1.3%	ΔH@:	1.5673	**Meter Box Leak Checks:**	
$T_{ambient}$, °F:	65	Impinger Box No.:	8	Y-factor:	1.0328	Pretest 0.005 cfm @ 16.5 in. Hg time:	7:53
DGM vol. Goal (m^3):	3.00	DGM vol. Goal (ft^3):	127.080	Min. ending DGM vol. (ft^3):	1096.725	Post-test 0.000 cfm @ 7.5 in. Hg time:	1140

Sampling Time (min.)	Clock Time (24hr)	Velocity ΔP (in. WG)		Meter ΔH (in. WG)	Actual ΔH (in. WG)	Meter Volume (cubic feet)	TEMPERATURE (°F) Probe (if heated)	Stack	Meter In	Meter Out	Filter	Impinger Exit	Pump Vacuum (in. Hg)	$\%I_i$	COMMENTS
0	7:50	0.150	0.387	1.30		969.645	253	133	63	59	259	51	7.5	-	
10	8:00	0.150	0.387	1.20		976.751	254	133	64	60	259	58	7.5	107	
20	8:10	0.150	0.387	1.20		983.261	258	133	74	62	259	48	7.5	97	
30	8:20	0.150	0.387	1.20		990.326	259	133	79	63	259	48	7.5	104	
40	8:30	0.150	0.387	1.25		997.109	259	133	78	66	260	50	7.5	100	
52	8:42	0.150	0.387	1.25		1,006.398	259	133	78	68	260	52	7.5	114	Shut down train, operations is having
52	9:20	0.150	0.387	1.25		1,006.398	254	133	76	69	262	51	7.5		instrumentation problems
62	9:30	0.150	0.387	1.25		1,014.129	257	133	86	71	261	47	7.5	113	Restart train at 0920.
72	9:40	0.150	0.387	1.25		1,020.596	257	133	87	73	261	51	7.5	94	
82	9:50	0.150	0.387	1.28		1,029.962	257	133	88	74	262	53	7.5	136	
92	10:00	0.150	0.387	1.25		1,035.175	257	133	88	75	261	54	7.5	75	
102	10:10	0.150	0.387	1.25		1,042.451	257	133	89	76	260	54	7.5	105	
112	10:20	0.150	0.387	1.25		1,049.745	258	133	90	77	260	55	7.5	105	
122	10:30	0.150	0.387	1.25		1,056.999	258	133	90	77	262	55	7.5	105	
132	10:40	0.150	0.387	1.25		1,064.621	258	133	90	77	262	55	7.5	110	
142	10:50	0.150	0.387	1.25		1,071.645	254	133	92	79	261	56	7.5	101	
152	11:00	0.150	0.387	1.25		1,078.976	255	133	92	79	262	56	7.5	105	
162	11:10	0.150	0.387	1.25		1,086.382	250	133	92	80	260	56	7.5	106	
172	11:20	0.150	0.387	1.25		1,093.731	250	133	92	80	260	57	7.5	106	
182	11:30	0.150	0.387	1.25		1,100.084	248	133	93	81	261	57	7.5	91	
Total	Total	ΔP_{avg}		Average		Total	Average Temperatures (°F)						Max.	Ave. $\%I_i$	
182	3:02	0.150	0.387	1.25		130.439	256	133	84	72	261	53	7.5	104	

Table B-11. 0050-STRT-2.

0050 CONFIGURATION TRAIN COMPONENT DATA SHEET
for HLLWE OFFGAS SAMPLING

Site: HLLWE Offgas Tie-in

Date: 6/11/2001

Run No.: 0050-STRT-2

Impinger Box no.:

Component:	KO-1	Imp-1	Imp-2	Imp-3	Imp-4	Acid Scrub Section		
Type:	short stem	G-S		modified		short stem	modified	modified
Reagent:	None	**0.05M** H_2SO_4		**0.1N** NaOH		None	**2N** NaOH	Silica Gel
Nominal Contents:	Empty	100 mL		100 mL		Empty	**200** mL	300-400g
Post-test Wt., g:	571.9	725.0	677.4	698.2	711.1	571.5	706.2	807.5
Pre-test Wt., g:	571.8	730.6	671.9	699.3	712.9	586.1	706.1	780.0
Wt. Gain, g:	0.1	-5.6	5.5	-1.1	-1.8	-14.6	0.1	27.5
Post-test Volume:	0.0	100.0	100.0	100.0	100.0	0.0		
Pre-test Volume:	0.0	100.0	100.0	100.0	100.0	0.0		
Volume Gain:	0.0	0.0	0.0	0.0	0.0	0.0		
Post-test pH:				13.0	13.0		14.0	

Train Wt. Gain	Train Vol. Gain
10.1	0.0

Filter Lot #: T4208E

H_2SO_4 Lot #: 328060

DI Water* Lot #: QCLAB-1

* used to dilute acid and caustic

O2% 20.5

CO2% 0

Record impinger change-out and other important information below:

Table B-11. 0050-STRT-2.

0050 FIELD DATA CALCULATIONS

Project:	01-1062-01-0866		
Run Date:	6/11/2001		
Run Identification:	0050-STRT-2		
PARAMETER	SYMBOL	UNITS	
Absolute Pressure in the Duct	Pabs	in. Hg	23.722
Average Duct Gas Temperature	Ts	R	593
Average Meter Temperature	Tm	R	538
Average Gas Oxygen Content	Co2,m	%	20.5
Average Gas Carbon Dioxide Content	Cco2,m	%	0.0
Total Impinger Weight Gain (water)	Ww	grams	10.1
Nozzle Area	An	ft^2	0.000538
Duct Area	As	ft^2	0.7854
Sample Volume	VmStd	dscf	110.880
Sample Volume (SI)	VmStdm	dscm	3.140
Average Sampling Rate	Qm	dscf/m	0.609
Volume of Water Vapor	VwStd	scf	0.476
Volume of Water Vapor (SI)	VwStdm	scm	0.0135
Moisture Fraction	Bws	-	0.004
Dry Gas Molecular Weight	Md	g/g-mol	28.82
Wet Gas Molecular Weight	Ms	g/g-mol	28.77
Gas Velocity at Nozzle	vn	ft/s	25.9
Gas Velocity at Nozzle (SI)	vnm	m/s	7.90
Average Gas Velocity	vncor	ft/s	21.87
Dry Offgas Flow Rate	Qsd	dscf/h	43,468
Dry Offgas Flow Rate (SI)	Qsdm	dscm/h	1,231
Actual Offgas Flow Rate	Q	acf/h	61,842
Intermediate Isokinetic Rate	Ii	%	104.6
Final Isokinetic Rate	**I**	**%**	**103.7**

Table B-11. 0050-STRT-2.

Project:	01-1062-01-0866
Run Date:	6/11/2001
Run Identification:	0050-STRT-2
Run Type:	TEST
Lab Report Date:	9/11/2001
Lab Report Status: (preliminary or final)	Final

0050 RESULTS

• without blank corrections

• final presentation should be rounded to two significant digits

	CONCENTRATIONS			MASS FLOW RATES		
	Actual (mg/acm)	Standard (mg/scm)	Dry Standard (mg/dscm)	mg/min	grams/sec	lb/h
Vapor Phase Species:	mg/acm	mg/scm	mg/dscm			
Chloride (as HCl)	B 6.5e-1	B 9.2e-1	B 9.2e-1 ppmv B 6.1e-1	B 1.9e1	B 3.2e-4	B 2.5e-3
Chloride (as Cl2)	mg/acm < 6.3e-2	mg/scm < 8.9e-2	mg/dscm < 8.9e-2 ppmv < 3.0e-2	< 1.8e0	< 3.0e-5	< 2.4e-4
Fluoride	mg/acm < 8.5e-2	mg/scm < 1.2e-1	mg/dscm < 1.2e-1	< 2.5e0	< 4.1e-5	< 3.3e-4
Nitrate	mg/acm 1.9e0	mg/scm 2.7e0	mg/dscm 2.7e0	5.6e1	9.4e-4	7.4e-3
Nitrite	mg/acm < 3.6e-1	mg/scm < 5.1e-1	mg/dscm < 5.1e-1	< 1.0e1	< 1.7e-4	< 1.4e-3
Total Particulate				7.2e0	1.2e-4	9.5e-4

Table B-12. 0050-END-2.

0050 SAMPLING DATA SHEET FOR HLLWE TESTS

Site:	HLLWE Offgas Tie-in	Sampling Location:	MAN-OFG-73	Nozzle No.:	2-01	Est. ΔP:	0.15	Est. T_{stack}, °F:	133
Project:	01-1062-01-0866	Duct ID, inches:	12	Nozzle Size, in.:	0.3140	Est. K:	7.66	Est. v_s, ft/s:	26.0
Date:	6/11/2001	Static Pressure, in. WG:	-17.5	Pitot No.:	JM-2	Est. ΔH:	1.15	Operator(s):	FE/RW
Run No.:	0050-END-2	Est. O_2, %:	20.5	Pitot Coeff.:	0.84	Est. DGM Temperature, °F			80
Run Type:	TEST	Est CO_2, %:	0	Meter Box No.	1	Pitot Leak Check: pass X	fail		PASS
$P_{bar.}$, in. Hg:	24.975	Est. Moist., %:	1.3%	ΔH@:	1.5673	**Meter Box Leak Checks:**			
$T_{ambient}$, °F:	70	Impinger Box No.:	9	Y-factor:	1.0328	Pretest	0.004 cfm @	15.0 in. Hg time:	13:45
DGM vol. Goal (m^3):	3.00	DGM vol. Goal (ft^3):	127.080	Min. ending DGM vol. (ft^3):	228.239	Post-test	0 cfm @	8.7 in. Hg time:	17:35

Sampling Time (min.)	Clock Time (24hr)	Velocity ΔP (in. WG)		Meter ΔH (in. WG)	Actual ΔH (in. WG)	Meter Volume (cubic feet)	TEMPERATURE (°F)						Pump Vacuum (in. Hg)	%I_i	COMMENTS
							Probe (if heated)	Stack	Meter In	Meter Out	Filter	Impinger Exit			
0	14:30	0.150	0.387	1.14		101.159	247	133	75	74	260	58	8.2	-	
10	14:40	0.150	0.387	1.15		108.120	248	133	82	75	260	50	8.2	101	
20	14:50	0.150	0.387	1.15		115.120	247	133	86	76	259	52	8.2	101	
30	15:00	0.150	0.387	1.16		122.090	248	132	88	77	259	53	8.2	101	
40	15:10	0.150	0.387	1.16		129.086	248	133	90	78	260	54	8.2	101	
50	15:20	0.150	0.387	1.16		136.050	247	132	91	79	259	54	8.2	100	
60	15:30	0.150	0.387	1.17		143.060	247	132	92	80	260	55	8.2	100	
70	15:40	0.150	0.387	1.17		150.050	247	132	92	81	260	55	8.2	100	
80	15:50	0.150	0.387	1.17		157.070	247	132	93	81	259	55	8.2	100	
90	16:00	0.150	0.387	1.17		164.270	247	132	92	81	261	56	8.5	103	
100	16:10	0.150	0.387	1.17		171.589	247	132	93	81	259	57	8.5	105	
110	16:20	0.150	0.387	1.17		178.920	247	132	93	81	260	57	8.7	105	
120	16:30	0.150	0.387	1.17		186.231	247	132	93	82	260	57	8.7	104	
130	16:40	0.150	0.387	1.17		193.623	247	132	93	82	259	58	8.7	106	
140	16:50	0.150	0.387	1.17		201.132	247	132	93	82	259	58	8.7	107	
150	17:00	0.150	0.387	1.17		208.340	247	132	93	82	258	58	8.7	103	
160	17:10	0.150	0.387	1.17		215.732	247	132	93	82	258	58	8.7	106	
170	17:20	0.150	0.387	1.17		222.973	247	132	92	81	260	59	8.7	104	
180	17:30	0.150	0.387	1.17		230.321	247	132	92	81	260	59	8.7	105	
Total	Total	ΔP_{avg}		Average		Total	Average Temperatures (°F)						Max.	Ave. %I_i	
180	3:00	0.150	0.387	1.16		129.162	247	132	90	80	259	56	8.7	103	

Table B-12. 0050-END-2.

0050 CONFIGURATION TRAIN COMPONENT DATA SHEET
for HLLWE OFFGAS SAMPLING

Site: HLLWE Offgas Tie-in

Impinger Box no.: 9

Date: 6/11/2001

Run No.: 0050-END-2

Component:	KO-1	Imp-1	Imp-2	Imp-3	Imp-4	Acid Scrub Section		
Type:	short stem	G-S		modified		short stem	modified	modified
Reagent:	None	**0.05M** H_2SO_4		**0.1N** NaOH		None	**2N** NaOH	Silica Gel
Nominal Contents:	Empty	100 mL		100 mL		Empty	**200 mL**	300-400g
Post-test Wt., g:	564.0	658.9	668.3	682.5	719.7	592.5	717.3	816.8
Pre-test Wt., g:	563.9	664.4	666.8	681.7	718.6	589.5	720.0	787.6
Wt. Gain, g:	0.1	-5.5	1.5	0.8	1.1	3.0	-2.7	29.2
Post-test Volume:	0.0	100.0	100.0	100.0	100.0	0.0		
Pre-test Volume:	0.0	100.0	100.0	100.0	100.0	0.0		
Volume Gain:	0.0	0.0	0.0	0.0	0.0	0.0		
Post-test pH:				13.0	13.0		14.0	

Train Wt. Gain	Train Vol. Gain
27.5	0.0

Filter Lot #: T408E H_2SO_4 Lot #: 328060 NaOH Lot3: 000381 DI Water* Lot #: QCLAB1

* used to dilute acid and caustic

O2% 20.5

CO2% 0

Record impinger change-out and other important information below:

Table B-12. 0050-END-2.

0050 FIELD DATA CALCULATIONS

Project:	01-1062-01-0866		
Run Date:	6/11/2001		
Run Identification:	0050-END-2		
PARAMETER	SYMBOL	UNITS	
Absolute Pressure in the Duct	Pabs	in. Hg	23.688
Average Duct Gas Temperature	Ts	R	592
Average Meter Temperature	Tm	R	545
Average Gas Oxygen Content	Co2,m	%	20.5
Average Gas Carbon Dioxide Content	Cco2,m	%	0.0
Total Impinger Weight Gain (water)	Ww	grams	27.5
Nozzle Area	An	ft^2	0.000538
Duct Area	As	ft^2	0.7854
Sample Volume	VmStd	dscf	108.235
Sample Volume (SI)	VmStdm	dscm	3.065
Average Sampling Rate	Qm	dscf/m	0.601
Volume of Water Vapor	VwStd	scf	1.297
Volume of Water Vapor (SI)	VwStdm	scm	0.0367
Moisture Fraction	Bws	-	0.012
Dry Gas Molecular Weight	Md	g/g-mol	28.82
Wet Gas Molecular Weight	Ms	g/g-mol	28.69
Gas Velocity at Nozzle	vn	ft/s	26.0
Gas Velocity at Nozzle (SI)	vnm	m/s	7.91
Average Gas Velocity	vncor	ft/s	21.90
Dry Offgas Flow Rate	Qsd	dscf/h	43,197
Dry Offgas Flow Rate (SI)	Qsdm	dscm/h	1,223
Actual Offgas Flow Rate	Q	acf/h	61,934
Intermediate Isokinetic Rate	Ii	%	103.1
Final Isokinetic Rate	**I**	**%**	**103.0**

Table B-12. 0050-END-2.

Project:	01-1062-01-0866
Run Date:	6/11/2001
Run Identification:	0050-END-2
Run Type:	TEST
Lab Report Date:	9/11/2001
Lab Report Status: (preliminary or final)	Final

0050 RESULTS

• without blank corrections

• final presentation should be rounded to two significant digits

	CONCENTRATIONS			MASS FLOW RATES		
	Actual (mg/acm)	Standard (mg/scm)	Dry Standard (mg/dscm)	mg/min	grams/sec	lb/h
Vapor Phase Species:	mg/acm	mg/scm	mg/dscm			
Chloride (as HCl)	B 6.6e-1	B 9.4e-1	B 9.5e-1 ppmv B 6.2e-1	B 1.9e1	B 3.2e-4	B 2.6e-3
Chloride (as Cl2)	mg/acm < 6.6e-2	mg/scm < 9.4e-2	mg/dscm < 9.5e-2 ppmv < 3.2e-2	< 1.9e0	< 3.2e-5	< 2.6e-4
Fluoride	mg/acm < 8.9e-2	mg/scm < 1.3e-1	mg/dscm < 1.3e-1	< 2.6e0	< 4.3e-5	< 3.4e-4
Nitrate	mg/acm 1.6e0	mg/scm 2.3e0	mg/dscm 2.3e0	4.7e1	7.9e-4	6.2e-3
Nitrite	mg/acm < 7.1e-1	mg/scm < 1.0e0	mg/dscm < 1.0e0	< 2.1e1	< 3.4e-4	< 2.7e-3
Total Particulate				B 5.3e0	B 8.9e-5	B 7.0e-4

Table B-13. 0060-STRT-1.

METHOD 0060 SAMPLING DATA SHEET FOR HLLWE TESTS

Site:	HLLWE Offgas Tie-in	Sampling Location:	MAN-OFG-73	Nozzle No.:	2-01	Est. ΔP:	0.17	Est. T_{stack}, °F:	133
Project:	01-1062-01-0866	Duct ID, inches:	12	Nozzle Size, in.:	0.3140	Est. K:	7.66	Est. v_s, ft/s:	27.6
Date:	6/5/2001	Static Pressure, in. WG:	-17.5	Pitot No.:	JM-2	Est. ΔH:	1.30	Operator(s):	RW,FE,JA
Run No.:	0060-STRT-1	Est. O_2, %:	20.5	Pitot Coeff.:	0.84	Est. DGM Temperature, °F			80
Run Type:	Test	Est CO_2, %:	0	Meter Box No.	2	**Leak Checks:**			
$P_{bar.}$, in. Hg:	25.019	Est. Moist., %:	1.3%	ΔH@:	1.5673	Pitot:	Pre-	Pass	Post- Pass
$T_{ambient}$, °F:	68	Impinger Box No.:	8	Y-factor:	1.0328	DGM Pre:	0.003 cfm @	21	inHg
DGM vol. Goal (m^3)	3.0	DGM vol. Goal (ft^3):	127.1	Min. ending DGM vol. (ft^3):	217.356	DGM Post:	0.000 cfm @	8	inHg

Sampling Time (min.)	Clock Time (24hr)	Velocity ΔP (in. WG)	Meter ΔH (in. WG)	Meter Volume (cubic feet)	TEMPERATURE (°F) Heated Line	Stack	Meter In	Meter Out	Filter	Impinger Exit	Pump Vacuum (in. Hg)	%I	COMMENTS
0	9:30	0.160	1.30	90.276	249	133	72	70	260	61	8.0	-	
10	9:40	0.160	1.20	97.240	249	133	80	71	260	53	7.0	99	O2=20.5
20	9:50	0.160	1.25	104.200	252	134	82	71	263	55	7.5	99	
30	10:00	0.160	1.22	111.220	251	133	84	72	262	57	7.5	99	O2=20.5
40	10:10	0.160	1.20	118.230	250	133	87	74	260	59	7.5	98	O2=20.6
50	10:20	0.160	1.20	125.380	249	132	90	77	261	61	7.5	100	O2=20.6
60	10:30	0.160	1.20	132.315	250	133	89	77	262	58	7.5	97	O2=20.6
70	10:40	0.160	1.20	139.455	250	133	87	76	261	54	7.5	100	O2=20.6
80	10:50	0.160	1.20	146.567	250	134	85	74	262	52	7.5	100	O2=20.6
90	11:00	0.160	1.20	153.653	250	133	81	74	261	52	7.5	100	O2=20.6
100	11:10	0.160	1.20	160.757	250	133	88	76	262	53	7.5	99	O2=20.6
110	11:20	0.160	1.20	167.850	251	133	90	77	260	54	7.5	99	O2=20.6
120	11:30	0.160	1.20	175.250	248	133	91	79	261	54	7.5	103	O2=20.6
130	11:40	0.160	1.20	182.110	252	133	92	79	260	55	7.5	95	O2=20.6
140	11:50	0.160	1.20	189.255	249	132	93	81	259	57	7.5	99	O2=20.6
150	12:00	0.160	1.20	196.425	249	133	94	82	261	57	7.5	99	O2=20.6
160	12:10	0.160	1.20	203.600	249	133	91	81	260	56	7.5	100	O2=20.6
170	12:20	0.160	1.20	210.810	250	133	89	79	261	55	7.5	101	O2=20.6
180	12:30	0.150	1.20	217.943	253	133	87	77	260	54	7.5	103	O2=20.6
Total	Total	ΔP_{avg}	Average	Total	Average Temperatures (°F)						Max.	Ave. %I	
180	3:00	0.159	1.21	127.667	250	133	87	76	261	56	8.0	99	

Table B-13. 0060-STRT-1.

0060 CONFIGURATION TRAIN COMPONENT DATA SHEET
for HLLWE OFFGAS SAMPLING

Site:	HLLWE Offgas Tie-in
Date:	6/5/2001
Run No.:	0060-STRT-1

IMPINGER BOX NO. = 8

				Mercury-Only Section						
Component:	KO-1	Imp-1	Imp-2	Imp-3	Imp-4	Imp-5	Acid Scrub Section			
Type:	short stem	modified	G-S	modified	modified		short stem	modified	modified	
Reagent:	None	5% HNO_3 / 10% H_2O_2		None	4% $KMnO_4$ / 10% H_2SO_4		None	**2N** NaOH	Silica Gel	
Nominal Contents:	Empty	100 mL solution in each		Empty	**200** mL solution in each		Empty	**100** mL	300-400g	
Post-test Wt., g:	571.9	718.1	704.9	618.6	733.6	731.3	590.0	680.5	900.3	Impinger
Pre-test Wt., g:	572.0	720.9	699.5	616.9	731.8	728.8	589.6	686.4	873.2	wt. gain (g)
Wt. Gain, g:	-0.1	-2.8	5.4	1.7	1.8	2.5	0.4	-5.9	27.1	30.1
Post-test Volume:	0.0	100.0	90.0	0.0	100.0	90.0	0.0			Impinger
Pre-test Volume:	0.0	100.0	100.0	0.0	100.0	100.0	0.0			vol. gain (mL)
Volume Gain:	0.0	0.0	-10.0	0.0	0.0	-10.0	0.0			-20.0
Post-test pH:								14.0		

Filter Lot #	53322	HNO_3 Lot #	129100	H_2SO_4 Lot #	328060
DI water* Lot #	QCLab-1	H_2O_2 Lot #	992809	$KMnO_4$ Lot #	006655

* used to dilute the other reagents

O_2%	20.6
CO_2%	0.0

Table B-13. 0060-STRT-1.

FIELD DATA CALCULATIONS

Project:	01-1062-01-0866		
Run Date:	6/5/2001		
Run Identification:	0060-STRT-1		
PARAMETER	SYMBOL	UNITS	
Absolute Pressure in the Duct	Pabs	in. Hg	23.732
Average Duct Gas Temperature	Ts	R	593
Average Meter Temperature	Tm	R	541
Average Gas Oxygen Content	Co2,m	%	20.6
Average Gas Carbon Dioxide Content	Cco2,m	%	0.0
Total Impinger Weight Gain (water)	Ww	grams	30.1
Nozzle Area	An	ft^2	0.000538
Duct Area	As	ft^2	0.785
Sample Volume	VmStd	dscf	107.88
Sample Volume (SI)	VmStdm	dscm	3.055
Average Sampling Rate	Qm	dscf/m	0.599
Volume of Water Vapor	VwStd	scf	1.419
Volume of Water Vapor (SI)	VwStdm	scm	0.0402
Moisture Fraction	Bws	-	0.013
Dry Gas Molecular Weight	Md	g/g-mol	28.82
Wet Gas Molecular Weight	Ms	g/g-mol	28.68
Gas Velocity at Nozzle	vn	ft/s	26.8
Gas Velocity at Nozzle (SI)	vnm	m/s	8.16
Average Gas Velocity	vncor	ft/s	22.58
Dry Offgas Flow Rate	Qsd	dscf/h	44,506
Dry Offgas Flow Rate (SI)	Qsdm	dscm/h	1,260
Actual Offgas Flow Rate	Q	acf/h	63,850
Intermediate Isokinetic Rate	Ii	%	99.6
Final Isokinetic Rate	**I**	**%**	**99.6**

Table B-13. 0060-STRT-1.

Project:	01-1062-01-0866
Run Date:	6/5/2001
Run Identification:	0060-STRT-1
Run Type:	Test
Lab Report Date:	8/28/2001
Lab Report Status: (preliminary or final)	Final

RESULTS

• without blank corrections

• final presentation should be rounded to two significant digits

	CONCENTRATIONS					MASS FLOW RATES					
	Actual (µg/acm)		Standard (µg/scm)		Dry Standard (µg/dscm)		µg/min		grams/sec		lb/h
Aluminum (Al)		3.2e1		4.5e1		4.6e1		9.6e2		1.6e-5		1.3e-4
Antimony (Sb)	B	1.0e0	B	1.5e0	B	1.5e0	B	3.2e1	B	5.3e-7	B	4.2e-6
Arsenic (As)	<,B	3.7e-1	<,B	5.2e-1	<,B	5.2e-1	<,B	1.1e1	<,B	1.8e-7	<,B	1.5e-6
Barium (Ba)	B	1.5e0	B	2.2e0	B	2.2e0	B	4.6e1	B	7.7e-7	B	6.1e-6
Beryllium (Be)	<,B	1.5e-1	<,B	2.1e-1	<,B	2.1e-1	<,B	4.5e0	<,B	7.4e-8	<,B	5.9e-7
Cadmium (Cd)	B	1.0e-1	B	1.5e-1	B	1.5e-1	B	3.2e0	B	5.3e-8	B	4.2e-7
Chromium (Cr)		6.8e-1		9.7e-1		9.8e-1		2.1e1		3.4e-7		2.7e-6
Cobalt (Co)	B	6.2e-1	B	8.7e-1	B	8.8e-1	B	1.9e1	B	3.1e-7	B	2.5e-6
Copper (Cu)	B	9.8e-1	B	1.4e0	B	1.4e0	B	3.0e1	B	4.9e-7	B	3.9e-6
Lead (Pb)	<,B	3.0e-1	<,B	4.2e-1	<,B	4.3e-1	<,B	8.9e0	<,B	1.5e-7	<,B	1.2e-6
Manganese (Mn)		4.3e0		6.1e0		6.2e0		1.3e2		2.2e-6		1.7e-5
Mercury (Hg)		2.3e1		3.2e1		3.3e1		6.9e2		1.1e-5		9.1e-5
Nickel (Ni)	B	1.1e0	B	1.6e0	B	1.6e0	B	3.4e1	B	5.7e-7	B	4.5e-6
Selenium (Se)	B	7.3e-1	B	1.0e0	B	1.0e0	B	2.2e1	B	3.7e-7	B	2.9e-6
Silver (Ag)	<	5.9e-1	<	8.4e-1	<	8.5e-1	<	1.8e1	<	3.0e-7	<	2.4e-6
Thallium (Tl)	<	5.7e-1	<	8.1e-1	<	8.2e-1	<	1.7e1	<	2.9e-7	<	2.3e-6
Vanadium (V)	<	6.2e-1	<	8.7e-1	<	8.8e-1	<	1.9e1	<	3.1e-7	<	2.5e-6
Zinc (Zn)		1.4e1		2.0e1		2.0e1		4.2e2		7.0e-6		5.5e-5

Table B-13. 0060-STRT-1.

Project:	01-1062-01-0866
Run Date:	6/5/2001
Run Identification:	0060-STRT-1
Run Type:	Test
Lab Report Date:	8/28/2001
Lab Report Status: (preliminary or final)	Final

RESULTS

CORRECTED FOR CONTRIBUTION FROM

Corrected for Reagent Blank per EPA SW-846 Test Method 0060

• final presentation should be rounded to two significant digits

	CONCENTRATIONS						MASS FLOW RATES					
	Actual (µg/acm)		Standard (µg/scm)		Dry Standard (µg/dscm)		µg/min		grams/sec		lb/h	
Aluminum (Al)		3.0e1		4.2e1		4.2e1		8.9e2		1.5e-5		1.2e-4
Antimony (Sb)	B	2.4e-1	B	3.4e-1	B	3.4e-1	B	7.2e0	B	1.2e-7	B	9.5e-7
Arsenic (As)	<,B	2.0e-1	<,B	2.8e-1	<,B	2.8e-1	<,B	5.9e0	<,B	9.9e-8	<,B	7.8e-7
Barium (Ba)	B	4.9e-1	B	6.9e-1	B	7.0e-1	B	1.5e1	B	2.5e-7	B	1.9e-6
Beryllium (Be)	<,B	1.0e-1	<,B	1.5e-1	<,B	1.5e-1	<,B	3.1e0	<,B	5.2e-8	<,B	4.1e-7
Cadmium (Cd)	B	9.1e-2	B	1.3e-1	B	1.3e-1	B	2.8e0	B	4.6e-8	B	3.6e-7
Chromium (Cr)		2.7e-1		3.8e-1		3.8e-1		8.0e0		1.3e-7		1.1e-6
Cobalt (Co)	B	6.2e-1	B	8.7e-1	B	8.8e-1	B	1.9e1	B	3.1e-7	B	2.5e-6
Copper (Cu)	B	9.9e-1	B	1.4e0	B	1.4e0	B	3.0e1	B	5.0e-7	B	3.9e-6
Lead (Pb)	<,B	2.0e-1	<,B	2.8e-1	<,B	2.8e-1	<,B	6.0e0	<,B	1.0e-7	<,B	7.9e-7
Manganese (Mn)		3.9e0		5.6e0		5.7e0		1.2e2		2.0e-6		1.6e-5
Mercury (Hg)		2.3e1		3.2e1		3.3e1		6.9e2		1.1e-5		9.1e-5
Nickel (Ni)	B	3.5e-1	B	5.0e-1	B	5.0e-1	B	1.1e1	B	1.8e-7	B	1.4e-6
Selenium (Se)	B	2.3e-11	B	3.2e-11	B	3.3e-11	B	6.9e-10	B	1.1e-17	B	9.1e-17
Silver (Ag)	<	6.0e-1	<	8.4e-1	<	8.5e-1	<	1.8e1	<	3.0e-7	<	2.4e-6
Thallium (Tl)	<	5.7e-1	<	8.1e-1	<	8.2e-1	<	1.7e1	<	2.9e-7	<	2.3e-6
Vanadium (V)	<	6.2e-1	<	8.7e-1	<	8.8e-1	<	1.9e1	<	3.1e-7	<	2.5e-6
Zinc (Zn)		1.3e1		1.8e1		1.8e1		3.8e2		6.4e-6		5.1e-5

Table B-14. 0060-END-1.

METHOD 0060 SAMPLING DATA SHEET FOR HLLWE TESTS

Site:	ILLWE Offgas Tie-in	Sampling Location:	MAN-OFG-73	Nozzle No.:	2-01	Est. ΔP:	0.17	Est. T_{stack}, °F:	133
Project:	01-1062-01-0866	Duct ID, inches:	12	Nozzle Size, in.:	0.3140	Est. K:	7.66	Est. V_s, ft/s:	27.6
Date:	6/5/2001	Static Pressure, in. WG:	-17.5	Pitot No.:	JM-2	Est. ΔH:	1.20	Operator(s):	FE/RW/JA
Run No.:	0060-END-1	Est. O_2, %:	20.6	Pitot Coeff.:	0.84	Est. DGM Temperature, °F			80
Run Type:	Test	Est CO_2, %:	0	Meter Box No.	2	**Leak Checks:**			
P_{bar}., in. Hg:	25.210	Est. Moist., %:	1.3%	ΔH@:	1.5673	Pitot:	Pre-	Pass	Post- Pass
$T_{ambient}$, °F:	68	Impinger Box No.:	8	Y-factor:	1.0328	DGM Pre:	0.005 cfm @	15	inHg
DGM vol. Goal (m^3)	3.0	DGM vol. Goal (ft^3):	127.1	Min. ending DGM vol. (ft^3):	403.758	DGM Post:	0.000 cfm @	6	inHg

Sampling Time (min.)	Clock Time (24hr)	Velocity ΔP (in. WG)	Meter ΔH (in. WG)	Meter Volume (cubic feet)	TEMPERATURE (°F) Heated Line	Stack	Meter In	Meter Out	Filter	Impinger Exit	Pump Vacuum (in. Hg)	%I_i	COMMENTS
0	16:00	0.160	1.20	276.678	257	133	69	68	264	48	5.0	-	
10	16:10	0.150	1.20	283.441	259	133	82	69	263	44	5.1	99	O2=20.6
20	16:20	0.150	1.20	290.220	259	133	84	71	262	47	5.1	99	O2=20.5
30	16:30	0.150	1.20	297.030	259	133	85	72	262	48	5.1	99	
40	16:40	0.150	1.20	303.900	259	133	85	73	262	49	5.1	100	O2=20.5
50	16:50	0.150	1.20	310.701	259	133	86	73	263	49	5.1	99	
60	17:00	0.150	1.20	317.650	259	133	86	74	263	50	5.1	101	O2=20.6
70	17:10	0.150	1.20	324.560	259	133	87	74	263	50	5.1	101	
80	17:20	0.150	1.20	331.653	259	133	87	74	264	51	5.1	103	O2=20.5
90	17:30	0.150	1.20	338.761	259	133	87	74	263	51	5.1	103	
100	17:40	0.150	1.20	345.873	259	133	86	74	264	52	5.2	104	O2=20.6
110	17:50	0.150	1.20	352.001	259	133	86	74	263	52	5.2	89	
120	18:00	0.150	1.20	360.078	259	133	86	74	263	52	5.2	118	O2=20.6
130	18:10	0.150	1.20	367.189	259	133	87	74	261	52	5.2	104	
140	18:20	0.150	1.20	374.275	259	134	87	74	263	53	5.2	103	O2=20.5
150	18:30	0.150	1.20	381.374	259	134	87	74	264	53	5.2	103	
160	18:40	0.150	1.20	388.481	259	133	87	74	263	53	5.2	103	O2=20.5
170	18:50	0.150	1.20	395.590	259	133	86	74	262	53	5.2	104	
180	19:00	0.150	1.20	402.710	259	133	86	74	264	53	5.2	104	O2=20.6
190	19:10	0.150	1.20	409.800	259	133	86	74	263	53	5.2	103	
200	19:20	0.150	1.20	416.928	259	133	86	74	262	53	5.2	104	O2=20.4
210	19:30	0.150	1.20	442.102	259	133	86	74	263	53	5.2	367	O2=20.5
215	19:35	0.150	1.20	427.542	259	133	86	74	263	53	5.2	-424	
Total	Total	ΔP_{avg}	Average	Total	Average Temperatures (°F)						Max.	Ave. %I_i	
215	3:35	0.150	1.20	150.864	259	133	85	73	263	51	5.2	90	

Table B-14. 0060-END-1.

0060 CONFIGURATION TRAIN COMPONENT DATA SHEET
for HLLWE OFFGAS SAMPLING

Site:	HLLWE Offgas Tie-in
Date:	6/5/2001
Run No.:	0060-END-1

IMPINGER BOX NO. = 8

				Mercury-Only Section						
Component:	KO-1	Imp-1	Imp-2	Imp-3	Imp-4	Imp-5	Acid Scrub Section			
Type:	short stem	modified	G-S	modified	modified		short stem	modified	modified	
Reagent:	None	5% HNO_3 / 10% H_2O_2		None	4% $KMnO_4$ / 10% H_2SO_4		None	**2N** NaOH	Silica Gel	
Nominal Contents:	Empty	100 mL solution in each		Empty	**200** mL solution in each		Empty	**100** mL	300-400g	
Post-test Wt., g:	572.2	717.8	705.1	617.9	732.4	731.7	590.9	678.0	831.3	Impinger
Pre-test Wt., g:	572.2	720.5	700.8	617.2	731.7	730.6	590.0	680.3	806.3	wt. gain (g)
Wt. Gain, g:	0.0	-2.7	4.3	0.7	0.7	1.1	0.9	-2.3	25.0	27.7
Post-test Volume:	0.0	92.0	102.0	0.0	100.0	100.0	0.0			Impinger
Pre-test Volume:	0.0	100.0	100.0	0.0	100.0	100.0	0.0			vol. gain (mL)
Volume Gain:	0.0	-8.0	2.0	0.0	0.0	0.0	0.0			-6.0
Post-test pH:								14.0		

Filter Lot #	53322	HNO_3 Lot #	129100	H_2SO_4 Lot #	3280601
DI water* Lot #	QCLAB-1	H_2O_2 Lot #	992809	$KMnO_4$ Lot #	006655

* used to dilute the other reagents

O_2%	20.5
CO_2%	0.0

Table B-14. 0060-END-1.

FIELD DATA CALCULATIONS

Project:	01-1062-01-0866		
Run Date:	6/5/2001		
Run Identification:	0060-END-1		
PARAMETER	SYMBOL	UNITS	
Absolute Pressure in the Duct	Pabs	in. Hg	23.923
Average Duct Gas Temperature	Ts	R	593
Average Meter Temperature	Tm	R	539
Average Gas Oxygen Content	Co2,m	%	20.5
Average Gas Carbon Dioxide Content	Cco2,m	%	0.0
Total Impinger Weight Gain (water)	Ww	grams	27.7
Nozzle Area	An	ft^2	0.000538
Duct Area	As	ft^2	0.785
Sample Volume	VmStd	dscf	129.00
Sample Volume (SI)	VmStdm	dscm	3.653
Average Sampling Rate	Qm	dscf/m	0.600
Volume of Water Vapor	VwStd	scf	1.306
Volume of Water Vapor (SI)	VwStdm	scm	0.0370
Moisture Fraction	Bws	-	0.010
Dry Gas Molecular Weight	Md	g/g-mol	28.82
Wet Gas Molecular Weight	Ms	g/g-mol	28.71
Gas Velocity at Nozzle	vn	ft/s	25.9
Gas Velocity at Nozzle (SI)	vnm	m/s	7.89
Average Gas Velocity	vncor	ft/s	21.84
Dry Offgas Flow Rate	Qsd	dscf/h	43,505
Dry Offgas Flow Rate (SI)	Qsdm	dscm/h	1,232
Actual Offgas Flow Rate	Q	acf/h	61,741
Intermediate Isokinetic Rate	Ii	%	102.3
Final Isokinetic Rate	**I**	**%**	**102.0**

Table B-14. 0060-END-1.

Project:	01-1062-01-0866
Run Date:	6/5/2001
Run Identification:	0060-END-1
Run Type:	Test
Lab Report Date:	8/28/2001
Lab Report Status: (preliminary or final)	Final

RESULTS

• without blank corrections

• final presentation should be rounded to two significant digits

	CONCENTRATIONS						MASS FLOW RATES					
	Actual (µg/acm)		Standard (µg/scm)		Dry Standard (µg/dscm)		µg/min		grams/sec		lb/h	
Aluminum (Al)		5.2e1		7.3e1		7.4e1		1.5e3		2.5e-5		2.0e-4
Antimony (Sb)	B	9.8e-1	B	1.4e0	B	1.4e0	B	2.9e1	B	4.8e-7	B	3.8e-6
Arsenic (As)	<	3.1e-1	<	4.3e-1	<	4.4e-1	<	9.0e0	<	1.5e-7	<	1.2e-6
Barium (Ba)	B	1.9e0	B	2.7e0	B	2.7e0	B	5.6e1	B	9.4e-7	B	7.4e-6
Beryllium (Be)	<,B	1.3e-1	<,B	1.8e-1	<,B	1.8e-1	<,B	3.7e0	<,B	6.1e-8	<,B	4.8e-7
Cadmium (Cd)	B	1.6e-1	B	2.2e-1	B	2.2e-1	B	4.6e0	B	7.7e-8	B	6.1e-7
Chromium (Cr)		9.1e-1		1.3e0		1.3e0		2.6e1		4.4e-7		3.5e-6
Cobalt (Co)	<	5.2e-1	<	7.3e-1	<	7.4e-1	<	1.5e1	<	2.5e-7	<	2.0e-6
Copper (Cu)	B	6.9e-1	B	9.8e-1	B	9.9e-1	B	2.0e1	B	3.4e-7	B	2.7e-6
Lead (Pb)	B	2.5e-1	B	3.5e-1	B	3.6e-1	B	7.3e0	B	1.2e-7	B	9.7e-7
Manganese (Mn)		4.4e0		6.2e0		6.3e0		1.3e2		2.2e-6		1.7e-5
Mercury (Hg)		2.9e1		4.1e1		4.1e1		8.4e2		1.4e-5		1.1e-4
Nickel (Ni)	B	1.2e0	B	1.6e0	B	1.6e0	B	3.4e1	B	5.6e-7	B	4.5e-6
Selenium (Se)	<	4.1e-1	<	5.7e-1	<	5.7e-1	<	1.2e1	<	2.0e-7	<	1.6e-6
Silver (Ag)	<	5.0e-1	<	7.0e-1	<	7.1e-1	<	1.5e1	<	2.4e-7	<	1.9e-6
Thallium (Tl)	<	4.6e-1	<	6.5e-1	<	6.6e-1	<	1.3e1	<	2.2e-7	<	1.8e-6
Vanadium (V)	<	5.2e-1	<	7.3e-1	<	7.4e-1	<	1.5e1	<	2.5e-7	<	2.0e-6
Zinc (Zn)		2.3e1		3.3e1		3.3e1		6.7e2		1.1e-5		8.9e-5

Table B-14. 0060-END-1.

Project:	01-1062-01-0866
Run Date:	6/5/2001
Run Identification:	0060-END-1
Run Type:	Test
Lab Report Date:	8/28/2001
Lab Report Status: (preliminary or final)	Final

RESULTS

CORRECTED FOR CONTRIBUTION FROM

Corrected for Reagent Blank per EPA SW-846 Test Method 0060

• final presentation should be rounded to two significant digits

	CONCENTRATIONS						MASS FLOW RATES					
	Actual (µg/acm)		Standard (µg/scm)		Dry Standard (µg/dscm)		µg/min		grams/sec		lb/h	
Aluminum (Al)		4.9e1		6.9e1		7.0e1		1.4e3		2.4e-5		1.9e-4
Antimony (Sb)	B	3.0e-1	B	4.2e-1	B	4.2e-1	B	8.7e0	B	1.4e-7	B	1.1e-6
Arsenic (As)	<	1.7e-1	<	2.3e-1	<	2.4e-1	<	4.8e0	<	8.1e-8	<	6.4e-7
Barium (Ba)	B	1.1e0	B	1.5e0	B	1.5e0	B	3.1e1	B	5.2e-7	B	4.1e-6
Beryllium (Be)	<,B	8.7e-2	<,B	1.2e-1	<,B	1.2e-1	<,B	2.5e0	<,B	4.2e-8	<,B	3.3e-7
Cadmium (Cd)	B	1.5e-1	B	2.1e-1	B	2.1e-1	B	4.3e0	B	7.1e-8	B	5.7e-7
Chromium (Cr)		5.5e-1		7.8e-1		7.9e-1		1.6e1		2.7e-7		2.1e-6
Cobalt (Co)	<	5.2e-1	<	7.3e-1	<	7.4e-1	<	1.5e1	<	2.5e-7	<	2.0e-6
Copper (Cu)	B	6.9e-1	B	9.8e-1	B	9.9e-1	B	2.0e1	B	3.4e-7	B	2.7e-6
Lead (Pb)	B	1.7e-1	B	2.4e-1	B	2.4e-1	B	4.9e0	B	8.2e-8	B	6.5e-7
Manganese (Mn)		4.2e0		5.9e0		6.0e0		1.2e2		2.0e-6		1.6e-5
Mercury (Hg)		2.9e1		4.1e1		4.1e1		8.4e2		1.4e-5		1.1e-4
Nickel (Ni)	B	4.9e-1	B	6.9e-1	B	7.0e-1	B	1.4e1	B	2.4e-7	B	1.9e-6
Selenium (Se)	<	1.9e-11	<	2.7e-11	<	2.7e-11	<	5.6e-10	<	9.4e-18	<	7.4e-17
Silver (Ag)	<	5.0e-1	<	7.1e-1	<	7.1e-1	<	1.5e1	<	2.4e-7	<	1.9e-6
Thallium (Tl)	<	4.6e-1	<	6.5e-1	<	6.6e-1	<	1.3e1	<	2.2e-7	<	1.8e-6
Vanadium (V)	<	5.2e-1	<	7.3e-1	<	7.4e-1	<	1.5e1	<	2.5e-7	<	2.0e-6
Zinc (Zn)		2.2e1		3.1e1		3.1e1		6.4e2		1.1e-5		8.5e-5

Table B-15. 0060-STRT-2.

METHOD 0060 SAMPLING DATA SHEET FOR HLLWE TESTS

Site:	HLLWE Offgas Tie-in	Sampling Location:	MAN-OFG-73	Nozzle No.:	2-01	Est. ΔP:	0.16	Est. T_{stack}, °F:	133
Project:	01-1062-01-0866	Duct ID, inches:	12	Nozzle Size, in.:	0.3140	Est. K:	7.67	Est. v_s, ft/s:	26.7
Date:	6/6/2001	Static Pressure, in. WG:	-17.5	Pitot No.:	JM-2	Est. ΔH:	1.23	Operator(s):	RW,FE, JA
Run No.:	0060-STRT-2	Est. O_2, %:	20.6	Pitot Coeff.:	0.84	Est. DGM Temperature, °F			80
Run Type:	Test	Est CO_2, %:	0	Meter Box No.	2	**Leak Checks:**			
P_{bar}, in. Hg:	25.219	Est. Moist., %:	1.3%	ΔH@:	1.5673	Pitot:	Pre-	PASS Post-	PASS
$T_{ambient}$, °F:	66	Impinger Box No.:	9	Y-factor:	1.0328	DGM Pre:	0.001 cfm @	17	inHg
DGM vol. Goal (m^3)	3.0	DGM vol. Goal (ft^3):	127.1	Min. ending DGM vol. (ft^3):	554.802	DGM Post:	0.000 cfm @	6	inHg

Sampling Time (min.)	Clock Time (24hr)	Velocity ΔP (in. WG)	Meter ΔH (in. WG)	Meter Volume (cubic feet)	TEMPERATURE (°F)						Pump Vacuum (in. Hg)	%I	COMMENTS
					Heated Line	Stack	Meter In	Meter Out	Filter	Impinger Exit			
0	7:51	0.170	1.20	427.722	255	134	63	53	260	48	5.3	-	
10	8:01	0.170	1.30	434.370	261	134	74	58	261	45	5.5	94	
20	8:11	0.170	1.30	441.310	260	134	76	62	265	49	5.5	97	
30	8:21	0.170	1.30	448.280	260	134	77	63	264	49	5.5	97	
40	8:31	0.170	1.30	455.250	260	134	78	64	261	50	5.5	97	
50	8:41	0.170	1.30	462.210	258	134	81	67	261	51	5.5	96	
59	8:50	0.170	1.30	468.605	258	134	82	68	263	52	5.5	98	Stopped train because of NWCF
59	9:22	0.170	1.30	468.605	255	134	78	67	264	53	5.5	#DIV/0!	building evacuation.
60	9:23	0.170	1.30	469.290	255	134	79	67	264	53	5.5	95	Restart at 0922
70	9:33	0.170	1.30	476.420	250	134	84	68	262	49	5.5	98	Hood O2=20.5
80	9:43	0.170	1.30	483.530	252	134	85	69	263	52	5.5	98	Hood O2=20.4
90	9:53	0.170	1.30	490.650	257	134	85	70	264	53	5.5	98	Hood O2=20.4
100	10:03	0.170	1.30	497.800	254	134	86	71	262	53	5.5	98	Hood O2=20.5
110	10:13	0.170	1.30	504.940	255	134	86	72	263	54	5.5	98	Offgas O2=20.5
120	10:23	0.170	1.30	512.090	251	134	87	73	262	54	5.5	98	Offgas O2=20.5
130	10:33	0.160	1.30	519.430	250	133	88	73	262	55	5.5	103	
140	10:43	0.160	1.30	527.621	252	133	88	74	262	54	5.5	115	
150	10:53	0.160	1.30	533.730	250	134	88	73	261	55	5.5	86	
160	11:03	0.160	1.30	540.740	254	134	88	75	261	56	5.5	99	Offgas O2=20.5
170	11:13	0.160	1.25	548.003	251	133	89	76	263	56	5.5	102	Offgas O2=20.5
180	11:23	0.160	1.25	555.122	253	133	89	76	261	56	5.5	100	Offgas O2=20.5
190	11:33	0.160	1.30	562.328	250	133	90	77	262	57	5.5	101	
Total	Total	ΔP_{avg}	Average	Total	Average Temperatures (°F)						Max.	Ave. %I	
190	3:10	0.167	1.29	134.606	255	134	83	69	262	52	5.5	#DIV/0!	

Table B-15. 0060-STRT-2.

0060 CONFIGURATION TRAIN COMPONENT DATA SHEET
for HLLWE OFFGAS SAMPLING

Site: HLLWE Offgas Tie-in
Date: 6/6/2001
Run No.: 0060-STRT-2

IMPINGER BOX NO. = 9

				Mercury-Only Section						
Component:	KO-1	Imp-1	Imp-2	Imp-3	Imp-4	Imp-5	Acid Scrub Section			
Type:	short stem	modified	G-S	modified	modified		short stem	modified	modified	
Reagent:	None	5% HNO_3 / 10% H_2O_2		None	4% $KMnO_4$ / 10% H_2SO_4		None	**2N** NaOH	Silica Gel	
Nominal Contents:	Empty	100 mL solution in each		Empty	**100** mL solution in each		Empty	**100** mL	300-400g	
Post-test Wt., g:	559.6	723.0	678.4	583.4	739.1	732.5	567.0	709.6	813.0	Impinger
Pre-test Wt., g:	559.6	726.2	674.0	582.4	739.6	733.3	564.3	716.1	785.1	wt. gain (g)
Wt. Gain, g:	0.0	-3.2	4.4	1.0	-0.5	-0.8	2.7	-6.5	27.9	25.0
Post-test Volume:	0.0	100.0	100.0	0.0	100.0	100.0	0.0			Impinger
Pre-test Volume:	0.0	100.0	100.0	0.0	100.0	100.0	0.0			vol. gain (mL)
Volume Gain:	0.0	0.0	0.0	0.0	0.0	0.0	0.0			0.0
Post-test pH:								14.0		

Filter Lot # 53322
DI water* Lot # QCLAB-1

HNO_3 Lot # 129100
H_2O_2 Lot # 992809

H_2SO_4 Lot # 328060
$KMnO_4$ Lot # 006655

* used to dilute the other reagents

O_2% 20.5
CO_2% 0.0

Table B-15. 0060-STRT-2.

FIELD DATA CALCULATIONS

Project:	01-1062-01-0866		
Run Date:	6/6/2001		
Run Identification:	0060-STRT-2		
PARAMETER	SYMBOL	UNITS	
Absolute Pressure in the Duct	Pabs	in. Hg	23.932
Average Duct Gas Temperature	Ts	R	593
Average Meter Temperature	Tm	R	536
Average Gas Oxygen Content	Co2,m	%	20.5
Average Gas Carbon Dioxide Content	Cco2,m	%	0.0
Total Impinger Weight Gain (water)	Ww	grams	25.0
Nozzle Area	An	ft^2	0.000538
Duct Area	As	ft^2	0.785
Sample Volume	VmStd	dscf	115.90
Sample Volume (SI)	VmStdm	dscm	3.282
Average Sampling Rate	Qm	dscf/m	0.610
Volume of Water Vapor	VwStd	scf	1.179
Volume of Water Vapor (SI)	VwStdm	scm	0.0334
Moisture Fraction	Bws	-	0.010
Dry Gas Molecular Weight	Md	g/g-mol	28.82
Wet Gas Molecular Weight	Ms	g/g-mol	28.71
Gas Velocity at Nozzle	vn	ft/s	27.3
Gas Velocity at Nozzle (SI)	vnm	m/s	8.31
Average Gas Velocity	vncor	ft/s	23.00
Dry Offgas Flow Rate	Qsd	dscf/h	45,790
Dry Offgas Flow Rate (SI)	Qsdm	dscm/h	1,297
Actual Offgas Flow Rate	Q	acf/h	65,037
Intermediate Isokinetic Rate	Ii	%	98.8
Final Isokinetic Rate	**I**	**%**	**98.5**

Table B-15. 0060-STRT-2.

Project:	01-1062-01-0866
Run Date:	6/6/2001
Run Identification:	0060-STRT-2
Run Type:	Test
Lab Report Date:	8/28/2001
Lab Report Status: (preliminary or final)	Final

RESULTS

• without blank corrections

• final presentation should be rounded to two significant digits

	CONCENTRATIONS						MASS FLOW RATES					
	Actual (µg/acm)		Standard (µg/scm)		Dry Standard (µg/dscm)		µg/min		grams/sec		lb/h	
Aluminum (Al)		1.6e1		2.3e1		2.3e1		5.0e2		8.3e-6		6.6e-5
Antimony (Sb)	B	9.7e-1	B	1.4e0	B	1.4e0	B	3.0e1	B	4.9e-7	B	3.9e-6
Arsenic (As)	<	3.4e-1	<	4.8e-1	<	4.9e-1	<	1.1e1	<	1.8e-7	<	1.4e-6
Barium (Ba)	B	1.1e0	B	1.5e0	B	1.6e0	B	3.4e1	B	5.6e-7	B	4.4e-6
Beryllium (Be)	<,B	1.4e-1	<,B	2.0e-1	<,B	2.0e-1	<,B	4.3e0	<,B	7.1e-8	<,B	5.7e-7
Cadmium (Cd)	<,B	5.8e-2	<,B	8.1e-2	<,B	8.2e-2	<,B	1.8e0	<,B	3.0e-8	<,B	2.4e-7
Chromium (Cr)		5.4e-1		7.5e-1		7.6e-1		1.6e1		2.7e-7		2.2e-6
Cobalt (Co)	<	5.8e-1	<	8.1e-1	<	8.2e-1	<	1.8e1	<	3.0e-7	<	2.4e-6
Copper (Cu)	B	4.9e-1	B	6.9e-1	B	7.0e-1	B	1.5e1	B	2.5e-7	B	2.0e-6
Lead (Pb)	<,B	3.0e-1	<,B	4.2e-1	<,B	4.3e-1	<,B	9.2e0	<,B	1.5e-7	<,B	1.2e-6
Manganese (Mn)		8.2e0		1.1e1		1.2e1		2.5e2		4.2e-6		3.3e-5
Mercury (Hg)		2.4e1		3.3e1		3.4e1		7.2e2		1.2e-5		9.6e-5
Nickel (Ni)	B	9.7e-1	B	1.4e0	B	1.4e0	B	3.0e1	B	4.9e-7	B	3.9e-6
Selenium (Se)	B	5.6e-1	B	7.8e-1	B	7.9e-1	B	1.7e1	B	2.9e-7	B	2.3e-6
Silver (Ag)	<	5.6e-1	<	7.8e-1	<	7.9e-1	<	1.7e1	<	2.9e-7	<	2.3e-6
Thallium (Tl)	<	5.4e-1	<	7.5e-1	<	7.6e-1	<	1.6e1	<	2.7e-7	<	2.2e-6
Vanadium (V)	<	5.8e-1	<	8.1e-1	<	8.2e-1	<	1.8e1	<	3.0e-7	<	2.4e-6
Zinc (Zn)		6.4e0		9.0e0		9.1e0		2.0e2		3.3e-6		2.6e-5

Table B-15. 0060-STRT-2.

Project:	01-1062-01-0866
Run Date:	6/6/2001
Run Identification:	0060-STRT-2
Run Type:	Test
Lab Report Date:	8/28/2001
Lab Report Status: (preliminary or final)	Final

RESULTS

CORRECTED FOR CONTRIBUTION FROM

Corrected for Reagent Blank per EPA SW-846 Test Method 0060

• final presentation should be rounded to two significant digits

	CONCENTRATIONS						MASS FLOW RATES					
	Actual (µg/acm)		Standard (µg/scm)		Dry Standard (µg/dscm)		µg/min		grams/sec		lb/h	
Aluminum (Al)		1.5e1		2.1e1		2.1e1		4.5e2		7.5e-6		6.0e-5
Antimony (Sb)	B	2.0e-1	B	2.8e-1	B	2.9e-1	B	6.2e0	B	1.0e-7	B	8.2e-7
Arsenic (As)	<	1.8e-1	<	2.6e-1	<	2.6e-1	<	5.7e0	<	9.4e-8	<	7.5e-7
Barium (Ba)	B	1.2e-1	B	1.6e-1	B	1.6e-1	B	3.6e0	B	5.9e-8	B	4.7e-7
Beryllium (Be)	<,B	9.7e-2	<,B	1.4e-1	<,B	1.4e-1	<,B	3.0e0	<,B	4.9e-8	<,B	3.9e-7
Cadmium (Cd)	<,B	4.5e-2	<,B	6.4e-2	<,B	6.4e-2	<,B	1.4e0	<,B	2.3e-8	<,B	1.8e-7
Chromium (Cr)		1.4e-1		2.0e-1		2.0e-1		4.4e0		7.4e-8		5.8e-7
Cobalt (Co)	<	5.8e-1	<	8.1e-1	<	8.2e-1	<	1.8e1	<	3.0e-7	<	2.4e-6
Copper (Cu)	B	4.8e-1	B	6.8e-1	B	6.9e-1	B	1.5e1	B	2.5e-7	B	2.0e-6
Lead (Pb)	<,B	2.1e-1	<,B	3.0e-1	<,B	3.0e-1	<,B	6.5e0	<,B	1.1e-7	<,B	8.5e-7
Manganese (Mn)		7.8e0		1.1e1		1.1e1		2.4e2		4.0e-6		3.2e-5
Mercury (Hg)		2.4e1		3.3e1		3.4e1		7.2e2		1.2e-5		9.6e-5
Nickel (Ni)	B	2.2e-1	B	3.1e-1	B	3.2e-1	B	6.8e0	B	1.1e-7	B	9.1e-7
Selenium (Se)	B	2.1e-11	B	3.0e-11	B	3.0e-11	B	6.6e-10	B	1.1e-17	B	8.7e-17
Silver (Ag)	<	5.6e-1	<	7.9e-1	<	8.0e-1	<	1.7e1	<	2.9e-7	<	2.3e-6
Thallium (Tl)	<	5.4e-1	<	7.5e-1	<	7.6e-1	<	1.6e1	<	2.7e-7	<	2.2e-6
Vanadium (V)	<	5.8e-1	<	8.1e-1	<	8.2e-1	<	1.8e1	<	3.0e-7	<	2.4e-6
Zinc (Zn)		5.6e0		7.8e0		7.9e0		1.7e2		2.8e-6		2.3e-5

Table B-16. 0060-END-2.

METHOD 0060 SAMPLING DATA SHEET FOR HLLWE TESTS

Site:	HLLWE Offgas Tie-in	Sampling Location:	MAN-OFG-73	Nozzle No.:	2-01	Est. ΔP:	0.15	Est. T_{stack}, °F:	133
Project:	01-1062-01-0866	Duct ID, inches:	12	Nozzle Size, in.:	0.3140	Est. K:	7.67	Est. v_s, ft/s:	26.7
Date:	6/6/2001	Static Pressure, in. WG:	-17.5	Pitot No.:	JM-2	Est. ΔH:	1.23	Operator(s):	FE/RW
Run No.:	0060-END-2	Est. O_2, %:	20.5	Pitot Coeff.:	0.84	Est. DGM Temperature, °F			80
Run Type:	Test	Est CO_2, %:	0	Meter Box No.	2	**Leak Checks:**			
$P_{bar.}$, in. Hg:	25.192	Est. Moist., %:	1.3%	ΔH@:	1.5673	Pitot:	Pre-	Pass	Post- Pass
$T_{ambient}$, °F:	70	Impinger Box No.:	8	Y-factor:	1.0328	DGM Pre:	0.000 cfm @	15.5	inHg
DGM vol. Goal (m^3)	3.0	DGM vol. Goal (ft^3):	127.1	Min. ending DGM vol. (ft^3):	690.106	DGM Post:	0.000 cfm @	6	inHg

Sampling Time (min.)	Clock Time (24hr)	Velocity ΔP (in. WG)	Meter ΔH (in. WG)	Meter Volume (cubic feet)	TEMPERATURE (°F) Heated Line	Stack	Meter In	Meter Out	Filter	Impinger Exit	Pump Vacuum (in. Hg)	%I_i	COMMENTS
0	15:00	0.150	1.25	563.026	248	133	82	75	257	57	5.2	-	
10	15:10	0.150	1.25	569.885	248	133	87	76	259	55	5.2	100	
20	15:20	0.150	1.25	576.880	250	133	90	78	260	55	5.2	101	O2=20.5
30	15:30	0.150	1.25	583.890	249	133	91	79	260	55	5.2	101	O2=20.5
40	15:40	0.150	1.20	590.900	251	133	92	79	259	55	5.2	101	O2=20.5
50	15:50	0.150	1.20	597.920	250	133	93	80	261	55	5.2	101	O2=20.5
60	16:00	0.150	1.20	604.930	250	133	93	80	261	55	5.2	101	O2=20.5
70	16:10	0.150	1.20	611.920	254	133	93	81	260	56	5.2	100	O2=20.4
80	16:20	0.150	1.20	618.940	254	133	93	81	260	57	5.2	101	O2=20.5
90	16:30	0.150	1.20	625.950	256	133	93	81	260	57	5.2	101	O2=20.4
100	16:40	0.150	1.20	632.960	256	133	93	81	260	58	5.2	101	O2=20.5
110	16:50	0.150	1.20	639.960	256	133	93	81	260	58	5.2	101	O2=20.4
120	17:00	0.150	1.20	646.980	255	133	93	81	261	59	5.2	101	O2=20.4
130	17:10	0.150	1.20	654.010	256	133	93	81	261	59	5.2	101	O2=20.4
140	17:20	0.150	1.20	661.020	255	133	93	81	259	60	5.2	101	O2=20.4
150	17:30	0.150	1.20	668.060	255	133	93	81	260	60	5.2	101	O2=20.5
160	17:40	0.150	1.20	675.060	255	133	93	81	260	61	5.2	101	O2=20.4
170	17:50	0.150	1.20	682.070	255	133	93	81	260	61	5.2	101	O2=20.4
180	18:00	0.150	1.30	689.520	255	133	93	81	260	61	5.5	107	O2=20.5
182	18:02	0.150	1.30	691.050	255	133	93	81	260	61	5.5	110	O2=20.4
Total	Total	ΔP_{avg}	Average	Total	Average Temperatures (°F)						Max.	Ave. %I_i	
182	3:02	0.150	1.22	128.024	253	133	92	80	260	58	5.5	102	

Table B-16. 0060-END-2.

0060 CONFIGURATION TRAIN COMPONENT DATA SHEET
for HLLWE OFFGAS SAMPLING

Site:	HLLWE Offgas Tie-in
Date:	6/6/2001
Run No.:	0060-END-2

IMPINGER BOX NO. = 8

				Mercury-Only Section						
Component:	KO-1	Imp-1	Imp-2	Imp-3	Imp-4	Imp-5	Acid Scrub Section			
Type:	short stem	modified	G-S	modified	modified		short stem	modified	modified	
Reagent:	None	5% HNO_3 / 10% H_2O_2		None	4% $KMnO_4$ / 10% H_2SO_4		None	**2N** NaOH	Silica Gel	
Nominal Contents:	Empty	100 mL solution in each		Empty	**200** mL solution in each		Empty	**100** mL	300-400g	
Post-test Wt., g:	572.2	720.7	682.1	618.4	734.6	718.7	608.8	691.6	781.0	Impinger
Pre-test Wt., g:	573.2	727.9	677.4	618.6	734.9	719.0	607.3	694.7	754.2	wt. gain (g)
Wt. Gain, g:	-1.0	-7.2	4.7	-0.2	-0.3	-0.3	1.5	-3.1	26.8	20.9
Post-test Volume:	0.0	100.0	100.0	0.0	100.0	100.0	0.0			Impinger
Pre-test Volume:	0.0	100.0	100.0	0.0	100.0	100.0	0.0			vol. gain (mL)
Volume Gain:	0.0	0.0	0.0	0.0	0.0	0.0	0.0			0.0
Post-test pH:								13.0		

Filter Lot #	53322	HNO_3 Lot #	129100	H_2SO_4 Lot #	328060
DI water* Lot #	QCLAB1	H_2O_2 Lot #	992809	$KMnO_4$ Lot #	06655

* used to dilute the other reagents

O_2%	20.5
CO_2%	0.0

Table B-16. 0060-END-2.

FIELD DATA CALCULATIONS

Project:	01-1062-01-0866		
Run Date:	6/6/2001		
Run Identification:	0060-END-2		
PARAMETER	SYMBOL	UNITS	
Absolute Pressure in the Duct	Pabs	in. Hg	23.905
Average Duct Gas Temperature	Ts	R	593
Average Meter Temperature	Tm	R	546
Average Gas Oxygen Content	Co2,m	%	20.5
Average Gas Carbon Dioxide Content	Cco2,m	%	0.0
Total Impinger Weight Gain (water)	Ww	grams	20.9
Nozzle Area	An	ft^2	0.000538
Duct Area	As	ft^2	0.785
Sample Volume	VmStd	dscf	108.05
Sample Volume (SI)	VmStdm	dscm	3.060
Average Sampling Rate	Qm	dscf/m	0.594
Volume of Water Vapor	VwStd	scf	0.985
Volume of Water Vapor (SI)	VwStdm	scm	0.0279
Moisture Fraction	Bws	-	0.009
Dry Gas Molecular Weight	Md	g/g-mol	28.82
Wet Gas Molecular Weight	Ms	g/g-mol	28.72
Gas Velocity at Nozzle	vn	ft/s	25.8
Gas Velocity at Nozzle (SI)	vnm	m/s	7.88
Average Gas Velocity	vncor	ft/s	21.81
Dry Offgas Flow Rate	Qsd	dscf/h	43,465
Dry Offgas Flow Rate (SI)	Qsdm	dscm/h	1,231
Actual Offgas Flow Rate	Q	acf/h	61,660
Intermediate Isokinetic Rate	Ii	%	101.4
Final Isokinetic Rate	**I**	**%**	**101.0**

Table B-16. 0060-END-2.

Project:	01-1062-01-0866
Run Date:	6/6/2001
Run Identification:	0060-END-2
Run Type:	Test
Lab Report Date:	8/28/2001
Lab Report Status: (preliminary or final)	Final

RESULTS

• without blank corrections

• final presentation should be rounded to two significant digits

	CONCENTRATIONS						MASS FLOW RATES					
	Actual (µg/acm)		Standard (µg/scm)		Dry Standard (µg/dscm)		µg/min		grams/sec		lb/h	
Aluminum (Al)		1.7e1		2.4e1		2.4e1		4.9e2		8.2e-6		6.5e-5
Antimony (Sb)	B	9.4e-1	B	1.3e0	B	1.3e0	B	2.7e1	B	4.6e-7	B	3.6e-6
Arsenic (As)	<	3.7e-1	<	5.2e-1	<	5.2e-1	<	1.1e1	<	1.8e-7	<	1.4e-6
Barium (Ba)	B	1.1e0	B	1.5e0	B	1.5e0	B	3.2e1	B	5.3e-7	B	4.2e-6
Beryllium (Be)	<,B	1.5e-1	<,B	2.1e-1	<,B	2.1e-1	<,B	4.4e0	<,B	7.3e-8	<,B	5.8e-7
Cadmium (Cd)	<	6.2e-2	<	8.7e-2	<	8.8e-2	<	1.8e0	<	3.0e-8	<	2.4e-7
Chromium (Cr)		1.2e0		1.7e0		1.7e0		3.4e1		5.7e-7		4.5e-6
Cobalt (Co)	<	6.2e-1	<	8.7e-1	<	8.8e-1	<	1.8e1	<	3.0e-7	<	2.4e-6
Copper (Cu)	<,B	3.2e-1	<,B	4.5e-1	<,B	4.6e-1	<,B	9.4e0	<,B	1.6e-7	<,B	1.2e-6
Lead (Pb)	<,B	2.8e-1	<,B	3.9e-1	<,B	3.9e-1	<,B	8.0e0	<,B	1.3e-7	<,B	1.1e-6
Manganese (Mn)		1.7e1		2.3e1		2.4e1		4.8e2		8.0e-6		6.4e-5
Mercury (Hg)		2.5e1		3.6e1		3.6e1		7.4e2		1.2e-5		9.8e-5
Nickel (Ni)	B	9.4e-1	B	1.3e0	B	1.3e0	B	2.7e1	B	4.6e-7	B	3.6e-6
Selenium (Se)	B	5.3e-1	B	7.4e-1	B	7.5e-1	B	1.5e1	B	2.6e-7	B	2.0e-6
Silver (Ag)	<	6.0e-1	<	8.4e-1	<	8.5e-1	<	1.7e1	<	2.9e-7	<	2.3e-6
Thallium (Tl)	<	5.5e-1	<	7.8e-1	<	7.8e-1	<	1.6e1	<	2.7e-7	<	2.1e-6
Vanadium (V)	<	6.2e-1	<	8.7e-1	<	8.8e-1	<	1.8e1	<	3.0e-7	<	2.4e-6
Zinc (Zn)		3.9e0		5.5e0		5.6e0		1.1e2		1.9e-6		1.5e-5

Table B-16. 0060-END-2.

Project:	01-1062-01-0866
Run Date:	6/6/2001
Run Identification:	0060-END-2
Run Type:	Test
Lab Report Date:	8/28/2001
Lab Report Status: (preliminary or final)	Final

RESULTS

CORRECTED FOR CONTRIBUTION FROM

Corrected for Reagent Blank per EPA SW-846 Test Method 0060

• final presentation should be rounded to two significant digits

	CONCENTRATIONS						MASS FLOW RATES					
	Actual (µg/acm)		Standard (µg/scm)		Dry Standard (µg/dscm)		µg/min		grams/sec		lb/h	
Aluminum (Al)		1.5e1		2.1e1		2.2e1		4.4e2		7.4e-6		5.9e-5
Antimony (Sb)	B	1.2e-1	B	1.7e-1	B	1.8e-1	B	3.6e0	B	6.0e-8	B	4.8e-7
Arsenic (As)	<	2.0e-1	<	2.8e-1	<	2.8e-1	<	5.8e0	<	9.6e-8	<	7.6e-7
Barium (Ba)	B	3.2e-2	B	4.5e-2	B	4.6e-2	B	9.4e-1	B	1.6e-8	B	1.2e-7
Beryllium (Be)	<,B	1.0e-1	<,B	1.5e-1	<,B	1.5e-1	<,B	3.0e0	<,B	5.0e-8	<,B	4.0e-7
Cadmium (Cd)	<	4.9e-2	<	6.8e-2	<	6.9e-2	<	1.4e0	<	2.4e-8	<	1.9e-7
Chromium (Cr)		7.5e-1		1.1e0		1.1e0		2.2e1		3.7e-7		2.9e-6
Cobalt (Co)	<	6.2e-1	<	8.7e-1	<	8.8e-1	<	1.8e1	<	3.0e-7	<	2.4e-6
Copper (Cu)	<,B	3.2e-1	<,B	4.4e-1	<,B	4.5e-1	<,B	9.2e0	<,B	1.5e-7	<,B	1.2e-6
Lead (Pb)	<,B	1.8e-1	<,B	2.5e-1	<,B	2.5e-1	<,B	5.2e0	<,B	8.6e-8	<,B	6.8e-7
Manganese (Mn)		1.6e1		2.2e1		2.3e1		4.6e2		7.7e-6		6.1e-5
Mercury (Hg)		2.5e1		3.6e1		3.6e1		7.4e2		1.2e-5		9.8e-5
Nickel (Ni)	B	1.5e-1	B	2.1e-1	B	2.1e-1	B	4.3e0	B	7.2e-8	B	5.7e-7
Selenium (Se)	B	2.3e-11	B	3.2e-11	B	3.3e-11	B	6.7e-10	B	1.1e-17	B	8.9e-17
Silver (Ag)	<	6.0e-1	<	8.5e-1	<	8.5e-1	<	1.7e1	<	2.9e-7	<	2.3e-6
Thallium (Tl)	<	5.5e-1	<	7.8e-1	<	7.8e-1	<	1.6e1	<	2.7e-7	<	2.1e-6
Vanadium (V)	<	6.2e-1	<	8.7e-1	<	8.8e-1	<	1.8e1	<	3.0e-7	<	2.4e-6
Zinc (Zn)		2.9e0		4.0e0		4.1e0		8.4e1		1.4e-6		1.1e-5

Table B-17. SVOC emission rates - grames per second comparisons.

Analyte	CAS Registry Number	STRT-1 g/s	Flag	Project Specific Flag	END-1 g/s	Flag	Project Specific Flag	STRT-2 g/s	Flag	Project Specific Flag	END-2 g/s	Flag	Project Specific Flag	Max value g/s	Flag	Avg+2σ g/s	Flag	Results g/s	Flag	Project Specific Flag	STRT Run Avgs g/s	END Run Avgs g/s
Acenaphthene	83-32-9	1.1e-6	<	N	1.1e-6	<	N	1.8e-6	<,J	P	9.9e-7	<	N	1.8e-6	<,J	2.0e-6		1.8e-6		P	1.4e-6	1.0e-6
Acenaphthylene	208-96-8	1.0e-6	<	N	1.0e-6	<	N	1.8e-6	<,J	P	9.6e-7	<	N	1.8e-6	<,J	2.0e-6		1.8e-6		P	1.4e-6	1.0e-6
Acetophenone	98-86-2	5.4e-6	<,J	P	3.9e-6	<,J	P	4.8e-6	<,J	P	3.8e-6	<,J	P	5.4e-6	<,J	6.0e-6		5.4e-6		P	5.1e-6	3.8e-6
Aniline	62-53-3	1.2e-5	<	N	1.2e-5	<	N	1.7e-5	<	N	1.1e-5	<	N	1.7e-5	<	1.8e-5		1.7e-5		N	1.5e-5	1.2e-5
Anthracene	120-12-7	1.0e-6	<	N	1.0e-6	<	N	1.8e-6	<,J	P	9.6e-7	<	N	1.8e-6	<,J	2.0e-6		1.8e-6		P	1.4e-6	1.0e-6
Benzidine	92-87-5	7.3e-5	<	N	7.2e-5	<	N	9.1e-5	<	N	6.8e-5	<	N	9.1e-5	<	9.7e-5		9.1e-5		N	8.2e-5	7.0e-5
Benzoic acid	65-85-0	5.4e-4	E	P	2.8e-4	E	P	2.6e-4	E	P	2.7e-4	E	P	5.4e-4	E	6.0e-4		5.4e-4		P	4.0e-4	2.8e-4
Benzo(a)anthracene	56-55-3	1.3e-6	<	N	1.3e-6	<	N	2.2e-6	<,J	P	1.2e-6	<	N	2.2e-6	<,J	2.4e-6		2.2e-6		P	1.7e-6	1.3e-6
Benzo(a)pyrene	50-32-8	1.4e-5	<	N	1.4e-5	<	N	1.6e-5	<,J	P	1.3e-5	<	N	1.6e-5	<,J	1.7e-5		1.6e-5		P	1.5e-5	1.4e-5
Benzo(b)fluoranthene	205-99-2	3.3e-5	<	N	3.2e-5	<	N	3.4e-5	<,J	P	3.0e-5	<	N	3.4e-5	<,J	3.6e-5		3.4e-5		P	3.3e-5	3.1e-5
Benzo(g,h,i)perylene	191-24-2	1.9e-5	<	N	1.8e-5	<	N	2.0e-5	<,J	P	1.7e-5	<	N	2.0e-5	<,J	2.1e-5		2.0e-5		P	2.0e-5	1.8e-5
Benzo(k)fluoranthene	207-08-9	4.7e-5	<	N	4.6e-5	<	N	4.9e-5	<,J	P	4.4e-5	<	N	4.9e-5	<,J	5.1e-5		4.9e-5		P	4.8e-5	4.5e-5
Benzyl alcohol	100-51-6	6.2e-5	<	N	6.2e-5	<	N	6.5e-5	<	N	5.8e-5	<	N	6.5e-5	<	6.7e-5		6.5e-5		N	6.4e-5	6.0e-5
bis(2-Chloroethoxy)methane	111-91-1	1.1e-6	<	N	1.1e-6	<	N	1.6e-6	<	N	1.0e-6	<	N	1.6e-6	<	1.7e-6		1.6e-6		N	1.3e-6	1.0e-6
bis(2-Chloroethyl)ether	111-44-4	1.2e-6	<	N	1.2e-6	<	N	1.8e-6	<,J	P	1.1e-6	<	N	1.8e-6	<,J	2.0e-6		1.8e-6		P	1.5e-6	1.2e-6
bis(2-Ethylhexyl)phthalate	117-81-7	1.3e-5	<,J	A	2.4e-5	<	P	1.5e-5	<,J	A	1.6e-5	<,J	A	2.4e-5	<	2.6e-5		2.4e-5		P	1.4e-5	2.0e-5
4-Bromophenyl-phenylether	101-55-3	1.0e-6	<	N	1.0e-6	<	N	2.0e-6	<,J	P	9.5e-7	<	N	2.0e-6	<,J	2.3e-6		2.0e-6		P	1.5e-6	9.8e-7
Butylbenzylphthalate	85-68-7	1.4e-6	<	N	1.4e-6	<	N	2.2e-6	<,J	P	1.3e-6	<	N	2.2e-6	<,J	2.4e-6		2.2e-6		P	1.8e-6	1.4e-6
Carbazole	86-74-8	1.4e-6	<	N	1.4e-6	<	N	2.0e-6	<,J	P	1.3e-6	<	N	2.0e-6	<,J	2.2e-6		2.0e-6		P	1.7e-6	1.4e-6
4-Chloro-3-methylphenol	59-50-7	1.9e-6	<	N	1.8e-6	<	N	3.5e-6	<,J	N	1.7e-6	<	N	3.5e-6	<,J	4.0e-6		3.5e-6		N	2.7e-6	1.8e-6
4-Chloroaniline	106-47-8	9.8e-6	<	N	9.7e-6	<	N	1.3e-5	<	N	9.1e-6	<	N	1.3e-5	<	1.3e-5		1.3e-5		N	1.1e-5	9.4e-6
2-Chloronaphthalene	91-58-7	1.0e-6	<	N	1.0e-6	<	N	1.7e-6	<,J	P	9.4e-7	<	N	1.7e-6	<,J	1.9e-6		1.7e-6		P	1.4e-6	9.7e-7
2-Chlorophenol	95-57-8	1.2e-6	<	N	1.2e-6	<	N	1.7e-6	<,J	P	1.1e-6	<	N	1.7e-6	<,J	1.8e-6		1.7e-6		P	1.5e-6	1.2e-6
4-Chlorophenyl phenyl ether	7005-72-36	1.2e-6	<	N	1.2e-6	<	N	1.9e-6	<,J	P	1.1e-6	<	N	1.9e-6	<,J	2.1e-6		1.9e-6		P	1.6e-6	1.2e-6
Chrysene	218-01-9	1.3e-6	<	N	1.3e-6	<	N	2.4e-6	<,J	P	1.2e-6	<	N	2.4e-6	<,J	2.7e-6		2.4e-6		P	1.9e-6	1.3e-6
Di-n-butylphthalate	84-74-2	1.1e-5	<,J	P	1.1e-5	<,J	P	1.3e-5	<,J	P	1.0e-5	<,J	P	1.3e-5	<,J	1.3e-5		1.3e-5		P	1.2e-5	1.0e-5
Di-n-octylphthalate	117-84-0	1.8e-5	<,J	P	1.7e-5	<,J	P	1.8e-5	<,J	P	1.6e-5	<,J	P	1.8e-5	<,J	1.9e-5		1.8e-5		P	1.8e-5	1.7e-5
Dibenz(a,h)anthracene	53-70-3	1.9e-5	<	N	1.8e-5	<	N	1.9e-5	<,J	P	1.7e-5	<	N	1.9e-5	<,J	2.0e-5		1.9e-5		P	1.9e-5	1.8e-5
Dibenzofuran	132-64-9	1.2e-6	<	N	1.2e-6	<	N	1.9e-6	<,J	P	1.1e-6	<	N	1.9e-6	<,J	2.1e-6		1.9e-6		P	1.6e-6	1.2e-6
1,2-Dichlorobenzene	95-50-1	1.2e-6	<	N	1.2e-6	<	N	1.8e-6	<,J	P	1.1e-6	<	N	1.8e-6	<,J	2.0e-6		1.8e-6		P	1.5e-6	1.2e-6
1,3-Dichlorobenzene	541-73-1	1.3e-6	<	N	1.3e-6	<	N	1.9e-6	<,J	P	1.2e-6	<	N	1.9e-6	<,J	2.1e-6		1.9e-6		P	1.6e-6	1.3e-6
1,4-Dichlorobenzene	106-46-7	1.8e-6	<,J	P	2.1e-6	J	P	2.3e-6	J	P	2.1e-6	<,J	P	2.3e-6	J	2.5e-6		2.3e-6		P	2.0e-6	2.1e-6
3,3'-Dichlorobenzidine	91-94-1	1.2e-5	<	N	1.2e-5	<	N	1.5e-5	<	N	1.1e-5	<	N	1.5e-5	<	1.6e-5		1.5e-5		N	1.3e-5	1.2e-5
2,4-Dichlorophenol	120-83-2	1.4e-6	<	N	1.4e-6	<	N	2.0e-6	<	N	1.3e-6	<	N	2.0e-6	<	2.2e-6		2.0e-6		N	1.7e-6	1.4e-6
Diethylphthalate	84-66-2	1.8e-6	<,J	P	1.6e-6	<	N	2.5e-6	<,J	P	1.5e-6	<	N	2.5e-6	<,J	2.7e-6		2.5e-6		P	2.1e-6	1.6e-6
Dimethyl phthalate	131-11-3	1.1e-6	<	N	1.0e-6	<	N	1.8e-6	<,J	P	9.7e-7	<	N	1.8e-6	<,J	2.0e-6		1.8e-6		P	1.4e-6	1.0e-6
2,4-Dimethylphenol	105-67-9	6.5e-6	<	N	6.4e-6	<	N	7.1e-6	<	N	6.0e-6	<	N	7.1e-6	<	7.4e-6		7.1e-6		N	6.8e-6	6.2e-6
4,6-Dinitro-2-methylphenol	534-52-1	1.4e-5	<	N	1.4e-5	<	N	1.6e-5	<	N	1.3e-5	<	N	1.6e-5	<	1.7e-5		1.6e-5		N	1.5e-5	1.4e-5
2,4-Dinitrophenol	51-28-5	3.0e-5	<	N	2.9e-5	<	N	3.2e-5	<	N	2.7e-5	<	N	3.2e-5	<	3.3e-5		3.2e-5		N	3.1e-5	2.8e-5
2,4-Dinitrotoluene	121-14-2	1.4e-6	<	N	1.4e-6	<	N	2.2e-6	<,J	P	1.3e-6	<	N	2.2e-6	<,J	2.4e-6		2.2e-6		P	1.8e-6	1.4e-6
2,6-Dinitrotoluene	606-20-2	1.3e-6	<	N	1.3e-6	<	N	1.8e-6	<,J	P	1.2e-6	<	N	1.8e-6	<,J	2.0e-6		1.8e-6		P	1.6e-6	1.3e-6
1,2-Diphenylhydrazine	122-66-7	1.1e-6	<	N	1.1e-6	<	N	1.8e-6	<,J	P	9.9e-7	<	N	1.8e-6	<,J	2.0e-6		1.8e-6		P	1.4e-6	1.0e-6
Fluoranthene	206-44-0	1.1e-6	<	N	1.1e-6	<	N	1.9e-6	<,J	P	1.0e-6	<	N	1.9e-6	<,J	2.2e-6		1.9e-6		P	1.5e-6	1.0e-6
Fluorene	86-73-7	1.1e-6	<	N	1.1e-6	<	N	1.8e-6	<,J	P	1.0e-6	<	N	1.8e-6	<,J	2.0e-6		1.8e-6		P	1.5e-6	1.0e-6
Hexachlorocyclopentadiene	77-47-4	1.8e-5	<	N	1.7e-5	<	N	2.0e-5	<	P	1.6e-5	<	N	2.0e-5	<	2.2e-5		2.0e-5		P	1.9e-5	1.7e-5
Hexachlorobenzene	118-74-1	1.2e-6	<	N	1.2e-6	<	N	1.8e-6	<,J	P	1.1e-6	<	N	1.8e-6	<,J	2.0e-6		1.8e-6		P	1.5e-6	1.2e-6
Hexachlorobutadiene	87-68-3	1.6e-6	<	N	1.6e-6	<	N	2.3e-6	<,J	P	1.5e-6	<	N	2.3e-6	<,J	2.5e-6		2.3e-6		P	2.0e-6	1.6e-6
Hexachloroethane	67-72-1	1.8e-6	<	N	1.7e-6	<	N	2.3e-6	<,J	P	1.6e-6	<	N	2.3e-6	<,J	2.4e-6		2.3e-6		P	2.0e-6	1.7e-6
Indeno(1,2,3-cd)pyrene	193-39-5	1.6e-5	<	N	1.6e-5	<	N	1.7e-5	<,J	P	1.5e-5	<	N	1.7e-5	<,J	1.8e-5		1.7e-5		P	1.7e-5	1.6e-5
Isophorone	78-59-1	1.1e-6	<	N	1.1e-6	<	N	1.8e-6	<,J	P	1.0e-6	<	N	1.8e-6	<,J	2.0e-6		1.8e-6		P	1.5e-6	1.0e-6
2-Methylnaphthalene	91-57-6	1.1e-6	<	N	1.1e-6	<	N	1.7e-6	<,J	P	1.0e-6	<	N	1.7e-6	<,J	1.9e-6		1.7e-6		P	1.4e-6	1.0e-6
2-Methylphenol	95-48-7	5.1e-6	<	N	5.1e-6	<	N	5.8e-6	<	N	4.8e-6	<	N	5.8e-6	<	6.1e-6		5.8e-6		N	5.5e-6	4.9e-6
3-Methylphenol & 4-Methylphenol	65794-96-9	3.7e-6	<	N	3.7e-6	<	N	4.4e-6	<	N	3.4e-6	<	N	4.4e-6	<	4.7e-6		4.4e-6		N	4.1e-6	3.6e-6
N-Nitroso-di-n-propylamine	621-64-7	1.2e-6	<	N	1.2e-6	<	N	1.7e-6	<	N	1.1e-6	<	N	1.7e-6	<	1.8e-6		1.7e-6		N	1.5e-6	1.2e-6
N-Nitrosodimethylamine	62-75-9	1.2e-6	<	N	1.2e-6	<	N	1.7e-6	<,J	P	1.1e-6	<	N	1.7e-6	<,J	1.8e-6		1.7e-6		P	1.5e-6	1.2e-6
N-Nitrosodiphenylamine	86-30-6	1.6e-6	<	N	1.6e-6	<	N	2.4e-6	<,J	P	1.5e-6	<	N	2.4e-6	<,J	2.6e-6		2.4e-6		P	2.0e-6	1.6e-6
Naphthalene	91-20-3	1.2e-6	<	N	1.2e-6	<	N	1.9e-6	<,J	P	1.1e-6	<	N	1.9e-6	<,J	2.1e-6		1.9e-6		P	1.6e-6	1.2e-6
2-Nitroaniline	88-74-4	1.2e-6	<	N	1.2e-6	<	N	1.9e-6	<	N	1.1e-6	<	N	1.9e-6	<	2.1e-6		1.9e-6		N	1.6e-6	1.2e-6
3-Nitroaniline	99-09-2	4.5e-6	<	N	4.4e-6	<	N	5.7e-6	<	N	4.2e-6	<	N	5.7e-6	<	6.1e-6		5.7e-6		N	5.1e-6	4.3e-6
4-Nitroaniline	100-01-6	3.9e-6	<	N	3.9e-6	<	N	5.0e-6	<	N	3.7e-6	<	N	5.0e-6	<	5.3e-6		5.0e-6		N	4.5e-6	3.8e-6
Nitrobenzene	98-95-1	1.8e-6	<,J	P	1.6e-6	<,J	P	2.3e-6	<,J	P	1.2e-6	<,J	P	2.3e-6	<,J	2.6e-6		2.3e-6		P	2.0e-6	1.4e-6
2-Nitrophenol	88-75-5	1.0e-5	<	P	4.4e-6	<,J	P	4.2e-6	<,J	P	5.2e-6	<,J	P	1.0e-5	<	1.1e-5		1.0e-5		P	7.1e-6	4.8e-6
4-Nitrophenol	100-02-7	8.3e-6	<,J	P	5.9e-6	<	N	7.2e-6	<	N	5.6e-6	<,J	P	8.3e-6	<,J	9.2e-6		8.3e-6		P	7.7e-6	5.8e-6
2,2'-Oxybis(1-chloropropane)	108-60-1	1.5e-6	<	N	1.5e-6	<	N	2.5e-6	<,J	P	1.4e-6	<	N	2.5e-6	<,J	2.8e-6		2.5e-6		P	2.0e-6	1.5e-6
Pentachlorobenzene	608-93-5	1.1e-6	<	N	1.1e-6	<	N	1.7e-6	<	N	1.0e-6	<	N	1.7e-6	<	1.9e-6		1.7e-6		N	1.4e-6	1.0e-6
Pentachloronitrobenzene	82-68-8	1.2e-6	<	N	1.2e-6	<	N	1.8e-6	<	N	1.1e-6	<	N	1.8e-6	<	2.0e-6		1.8e-6		N	1.5e-6	1.2e-6
Pentachlorophenol	87-86-5	3.3e-5	<	N	3.2e-5	<	N	3.5e-5	<	N	3.8e-5	<	N	3.8e-5	<	3.9e-5		3.8e-5		N	3.4e-5	3.5e-5
Phenanthrene	85-01-8	1.1e-6	<	N	1.1e-6	<	N	1.9e-6	<,J	P	9.9e-7	<	N	1.9e-6	<,J	2.2e-6		1.9e-6		P	1.5e-6	1.0e-6
Phenol	108-95-2	8.4e-6	<	P	4.0e-6	<,J	P	3.8e-6	<,J	P	4.0e-6	<,J	P	8.4e-6	<	9.6e-6		8.4e-6		P	6.1e-6	4.0e-6
Pyrene	129-00-0	1.1e-6	<	N	1.1e-6	<	N	2.0e-6	<,J	P	1.0e-6	<	N	2.0e-6	<,J	2.3e-6		2.0e-6		P	1.6e-6	1.0e-6
Pyridine	110-86-1	1.9e-6	<	N	1.8e-6	<	N	3.2e-6	<	N	1.7e-6	<	N	3.2e-6	<	3.5e-6		3.2e-6		N	2.5e-6	1.8e-6
1,2,4,5-Tetrachlorobenzene	95-94-3	1.2e-6	<	N	1.2e-6	<	N	1.8e-6	<	N	1.1e-6	<	N	1.8e-6	<	2.0e-6		1.8e-6		N	1.5e-6	1.2e-6
1,2,4-Trichlorobenzene	120-82-1	1.3e-6	<	N	1.3e-6	<	N	1.9e-6	<,J	P	1.2e-6	<	N	1.9e-6	<,J	2.1e-6		1.9e-6		P	1.6e-6	1.3e-6
2,4,5-Trichlorophenol	95-95-4	2.7e-6	<	N	2.7e-6	<	N	3.3e-6	<	N	2.5e-6	<	N	3.3e-6	<	3.5e-6		3.3e-6		N	3.0e-6	2.6e-6
2,4,6-Trichlorophenol	88-06-2	1.8e-6	<	N	1.7e-6	<	N	2.4e-6	<	N	1.6e-6	<	N	2.4e-6	<	2.6e-6		2.4e-6		N	2.1e-6	1.7e-6

Table B-17. SVOC emission rates - grames per second comparisons.

TICs	CAS Registry Number	STRT-1 g/s	Flag	Project Specific Flag	END-1 g/s	Flag	Project Specific Flag	STRT-2 g/s	Flag	Project Specific Flag	END-2 g/s	Flag	Project Specific Flag	Max value g/s		Avg+2σ g/s	Results g/s	Project Specific Flag	STRT Run Avgs g/s	END Run Avgs g/s
1,2-Benzenedicarboxylic acid,	1330-96-7							9.6e-7	N,J,Q	P				9.6e-7	N,J,Q		9.6e-7	P	9.6e-7	
2,4-Hexadiene	592-46-1				1.7e-5	N,J,M	P				2.8e-6	N,J,M	P	1.7e-5	N,J,M	3.1e-5	1.7e-5	P		1.0e-5
2,5-Diethylphenol	876-20-0										1.0e-5	N,J,M	P	1.0e-5	N,J,M		1.0e-5	P		1.0e-5
2-Cyclohexene-1-one, 3-methyl-	1193-18-6										3.2e-7	N,J,M	P	3.2e-7	N,J,M		3.2e-7	P		3.2e-7
2-Hexanone	591-78-6	2.5e-5	N,J,M	P	1.3e-5	N,J,M	P							2.5e-5	N,J,M	3.6e-5	2.5e-5	P	2.5e-5	1.3e-5
3-Hexanone	589-38-8	2.1e-5	N,J,M	P	1.0e-5	N,J,M	P	1.1e-5	N,J,M	P	7.1e-6	N,J,M	P	2.1e-5	N,J,M	2.4e-5	2.1e-5	P	1.6e-5	8.7e-6
Benzaldehyde	100-52-7	1.2e-4	N,J,M	P	8.0e-5	N,J,M	P	7.6e-5	N,J,M	P	7.4e-5	N,J,M	P	1.2e-4	N,J,M	1.3e-4	1.2e-4	P	9.8e-5	7.7e-5
Benzaldehyde, 4-ethyl-	4748-78-1				6.2e-6	N,J,M	P							6.2e-6	N,J,M		6.2e-6	P		6.2e-6
Benzaldehyde, ethyl-	53951-50-1										6.2e-6	N,J,M	P	6.2e-6	N,J,M		6.2e-6	P		
Benzo(e)pyrene	192-97-2							1.6e-6	N,J,Q	P				1.6e-6	N,J,Q		1.6e-6	P	1.6e-6	
Cyclododecane	294-62-2	3.4e-6	N,J,M	P	3.2e-6	N,J,M	P	6.4e-7	N,J,M	P	1.3e-6	N,J,M	P	3.4e-6	N,J,M	4.9e-6	3.4e-6	P	2.0e-6	2.3e-6
Dodecane	112-40-3	7.3e-6	N,J,M	P	5.2e-6	N,J,M	P	6.3e-6	N,J,M	P	3.8e-6	N,J,M	P	7.3e-6	N,J,M	8.7e-6	7.3e-6	P	6.8e-6	4.5e-6
Eicosane	112-95-8	6.7e-7	N,J,M	P							1.9e-6	N,J,M	P	1.9e-6	N,J,M	3.1e-6	1.9e-6	P	6.7e-7	1.9e-6
Formic acid, phenylmethyl ester	104-57-4				7.8e-6	N,J,M	P				9.6e-6	N,J,M	P	9.6e-6	N,J,M	1.1e-5	9.6e-6	P		8.7e-6
Furan, 2,5-dimethyl-	625-86-5	1.5e-6	N,J,M	P	8.4e-7	N,J,M	P	1.1e-6	N,J,M	P				1.5e-6	N,J,M	1.9e-6	1.5e-6	P	1.3e-6	8.4e-7
Heneicosane	629-94-7	2.2e-7	N,J,M	P							9.2e-7	N,J,M	P	9.2e-7	N,J,M	1.6e-6	9.2e-7	P	2.2e-7	9.2e-7
Heptacosane	593-49-7										8.4e-6	N,J,M	P	8.4e-6	N,J,M		8.4e-6	P		8.4e-6
Heptadecane	629-78-7	9.7e-7	N,J,M	P	4.3e-7	N,J,M	P							9.7e-7	N,J,M	1.5e-6	9.7e-7	P	9.7e-7	4.3e-7
Heptane, 2,3-dimethyl-	3074-71-3				1.1e-6	N,J,M	P							1.1e-6	N,J,M		1.1e-6	P		1.1e-6
Heptane, 2,5-dimethyl-	2216-30-0							8.1e-7	N,J,M	P				8.1e-7	N,J,M		8.1e-7	P	4.0e-7	
Hexacosane	630-01-3										6.5e-6	N,J,M	P	6.5e-6	N,J,M		6.5e-6	P		6.5e-6
Hexadecanoic acid	57-10-3	5.9e-7	N,J,M	P										5.9e-7	N,J,M		5.9e-7	P	5.9e-7	
Hexanedioic acid, bis(2-ethylh)	103-23-1							1.1e-6	N,J,Q	P				1.1e-6	N,J,Q		1.1e-6	P	1.1e-6	
Hexatriacontane	630-06-8										5.8e-7	N,J,M	P	5.8e-7	N,J,M		5.8e-7	P		5.8e-7
Naphthalene, 1-methyl-	90-12-0							8.9e-7	N,J,Q	P				8.9e-7	N,J,Q		8.9e-7	P	8.9e-7	
Octadecanoic acid	57-11-4	3.9e-7	N,J,M	P	2.2e-7	N,J,M	P							3.9e-7	N,J,M	5.6e-7	3.9e-7	P	3.9e-7	2.2e-7
Octane, 3-methyl-	2216-33-3	8.6e-7	N,J,M	P										8.6e-7	N,J,M		8.6e-7	P	8.6e-7	
Pentacosane	629-99-2										3.8e-6	N,J,M	P	3.8e-6	N,J,M		3.8e-6	P		3.8e-6
Pentadecane	629-62-9	1.6e-6	N,J,M	P							4.6e-7	N,J,M	P	1.6e-6	N,J,M	2.7e-6	1.6e-6	P	1.6e-6	4.6e-7
Phosphine oxide, triphenyl-	791-28-6	9.5e-7	N,J,M	P										9.5e-7	N,J,M		9.5e-7	P	9.5e-7	
Phosphoric acid tributyl ester	126-73-8	2.5e-6	N,J,M	P	1.7e-6	N,J,M	P				2.4e-6	N,J,M	P	2.5e-6	N,J,M	3.1e-6	2.5e-6	P	2.5e-6	2.1e-6
Tetracosane	646-31-1										2.6e-6	N,J,M	P	2.6e-6	N,J,M		2.6e-6	P		2.6e-6
Tetradecane	629-59-4	9.4e-7	N,J,M	P	1.0e-5	N,J,M	P	6.4e-6	N,J,M	P	1.0e-5	N,J,M	P	1.0e-5	N,J,M	1.6e-5	1.0e-5	P	3.7e-6	1.0e-5
Tetratetracontane	7098-22-8	7.2e-7	N,J,M	P										7.2e-7	N,J,M		7.2e-7	P	7.2e-7	
Tridecane	629-50-5	2.2e-6	N,J,M	P	2.3e-6	N,J,M	P	2.0e-6	N,J,M	P	2.1e-6	N,J,M	P	2.3e-6	N,J,M	2.3e-6	2.3e-6	P	2.1e-6	2.2e-6

Total Analytes 1.5e-3
Total Detected Analytes 1.2e-3
Total Volatile Emissions rate in lbs/hr = 0.011826754

Table B-18. 0031 emission rates - grams per second comparisons.

Analyte	CAS Registry Number	STRT-1 g/s	Flag	Project Specific Flag	END-1 g/s	Flag	Project Specific Flag	STRT-2 g/s	Flag	Project Specific Flag	END-2 g/s	Flag	Project Specific Flag	Max value g/s	Flag	Avg+2σ g/s	Flag	Results g/s	Flag	Project Specific Flag	STRT Run Avgs g/s	END Run Avgs g/s
Acetone	67-64-1	2.9e-5	B	A	3.0e-5	B	A	2.1e-5	J,B	A	1.6e-5	<,J,B	A	3.0e-5	B	3.8e-5		3.0e-5	B	A	2.5e-5	2.3e-5
Acrylonitrile	107-13-1	1.1e-5	<	N	1.2e-5	<	N	1.2e-5	<	N	1.2e-5	<	N	1.2e-5	<	1.2e-5		1.2e-5	<	N	1.1e-5	1.2e-5
Benzene	71-43-2	1.6e-6	<	P	1.0e-6	<	P	9.1e-7	<,J	P	8.4e-7	<	P	1.6e-6	<	1.8e-6		1.6e-6	<	P	1.3e-6	9.3e-7
Bromobenzene	108-86-1	4.9e-7	<	N	5.0e-7	<	N	5.0e-7	<	N	5.0e-7	<	N	5.0e-7	<	5.1e-7		5.0e-7	<	N	4.9e-7	5.0e-7
Bromochloromethane	74-97-5	6.1e-7	<	N	6.3e-7	<	N	6.2e-7	<	N	6.3e-7	<	N	6.3e-7	<	6.4e-7		6.3e-7	<	N	6.2e-7	6.3e-7
Bromodichloromethane	75-27-4	4.9e-7	<	N	5.0e-7	<	N	5.0e-7	<	N	5.0e-7	<	N	5.0e-7	<	5.1e-7		5.0e-7	<	N	4.9e-7	5.0e-7
Bromoform	75-25-2	7.3e-7	<	N	7.6e-7	<	N	7.4e-7	<	N	7.6e-7	<	N	7.6e-7	<	7.7e-7		7.6e-7	<	N	7.4e-7	7.6e-7
Bromomethane	74-83-9	6.9e-7	<,J	P	9.7e-7	<,J	P	6.2e-7	<,J	P	8.4e-7	J	P	9.7e-7	<,J	1.1e-6		9.7e-7	<,J	P	6.6e-7	9.0e-7
2-Butanone	78-93-3	3.6e-6	<,J	P	3.7e-6	<,J	P	3.7e-6	<,J	P	3.7e-6	<	N	3.7e-6	<,J	3.8e-6		3.7e-6	<,J	P	3.7e-6	3.7e-6
n-Butylbenzene	104-51-8	6.1e-7	<	N	6.3e-7	<	N	6.2e-7	<	N	6.3e-7	<	N	6.3e-7	<	6.4e-7		6.3e-7	<	N	6.2e-7	6.3e-7
sec-Butylbenzene	135-98-8	3.5e-7	<	N	3.6e-7	<	N	3.5e-7	<	N	3.6e-7	<	N	3.6e-7	<	3.6e-7		3.6e-7	<	N	3.5e-7	3.6e-7
tert-Butylbenzene	98-06-6	5.7e-7	<	N	5.9e-7	<	N	5.8e-7	<	N	5.9e-7	<	N	5.9e-7	<	6.0e-7		5.9e-7	<	N	5.7e-7	5.9e-7
Carbon disulfide	75-15-0	4.0e-6	<	P	5.0e-6	<	P	5.4e-6	<	P	2.7e-6	<	P	5.4e-6	<	6.7e-6		5.4e-6	<	P	4.7e-6	3.9e-6
Carbon tetrachloride	56-23-5	6.5e-7	<	N	6.7e-7	<	N	6.6e-7	<	N	6.7e-7	<,J	P	6.7e-7	<	6.8e-7		6.7e-7	<	P	6.6e-7	6.7e-7
Chlorobenzene	108-90-7	3.9e-7	<	N	4.0e-7	<,J	P	3.9e-7	<	N	4.0e-7	<,J	P	4.0e-7	<,J	4.1e-7		4.0e-7	<,J	P	3.9e-7	4.0e-7
Chlorodibromomethane	124-48-1	6.1e-7	<	N	6.3e-7	<	N	6.2e-7	<	N	6.3e-7	<	N	6.3e-7	<	6.4e-7		6.3e-7	<	N	6.2e-7	6.3e-7
Chloroethane	75-00-3	6.5e-7	<,J	P	8.4e-7	<,J	P	7.0e-7	<,J	P	6.7e-7	<,J	P	8.4e-7	<,J	8.9e-7		8.4e-7	<,J	P	6.8e-7	7.6e-7
Chloroform	67-66-3	9.8e-7	<,J	P	1.7e-6	<	P	1.4e-6	<	P	1.6e-6	<	P	1.7e-6	<	2.1e-6		1.7e-6	<	P	1.2e-6	1.7e-6
Chloromethane	74-87-3	4.9e-6	J	P	1.2e-5	<	P	5.0e-6	<,J	P	1.1e-5	<,J	P	1.2e-5	<	1.6e-5		1.2e-5	<	P	4.9e-6	1.1e-5
2-Chlorotoluene	95-49-8	2.4e-7	<	N	2.5e-7	<	N	2.4e-7	<	N	2.5e-7	<	N	2.5e-7	<	2.5e-7		2.5e-7	<	N	2.4e-7	2.5e-7
4-Chlorotoluene	106-43-4	2.4e-7	<	N	2.5e-7	<	N	2.4e-7	<	N	2.5e-7	<	N	2.5e-7	<	2.5e-7		2.5e-7	<	N	2.4e-7	2.5e-7
1,2-Dibromo-3-chloropropane	96-12-8	1.1e-6	<	N	1.2e-6	<	N	1.2e-6	<	N	1.1e-6	<	N	1.2e-6	<	1.2e-6		1.2e-6	<	N	1.1e-6	1.2e-6
1,2-Dibromoethane	106-93-4	8.2e-7	<	N	8.4e-7	<	N	8.3e-7	<	N	8.4e-7	<	N	8.4e-7	<	8.6e-7		8.4e-7	<	N	8.2e-7	8.4e-7
Dibromomethane	74-95-3	6.9e-7	<	N	7.2e-7	<	N	7.0e-7	<	N	7.1e-7	<	N	7.2e-7	<	7.3e-7		7.2e-7	<	N	7.0e-7	7.2e-7
1,2-Dichlorobenzene	95-50-1	7.3e-7	<	N	7.6e-7	<	N	7.4e-7	<	N	7.6e-7	<	N	7.6e-7	<	7.7e-7		7.6e-7	<	N	7.4e-7	7.6e-7
1,3-Dichlorobenzene	541-73-1	4.1e-7	<	N	4.2e-7	<	N	4.1e-7	<	N	4.2e-7	<	N	4.2e-7	<	4.3e-7		4.2e-7	<	N	4.1e-7	4.2e-7
1,4-Dichlorobenzene	106-46-7	5.7e-7	<	N	5.9e-7	<	N	5.8e-7	<	N	5.9e-7	<	N	5.9e-7	<	6.0e-7		5.9e-7	<	N	5.7e-7	5.9e-7
Dichlorodifluoromethane	75-71-8	1.1e-6	<	P	6.7e-7	<,J	P	8.3e-7	<	P	6.7e-7	<,J	P	1.1e-6	<	1.2e-6		1.1e-6	<	P	9.4e-7	6.7e-7
1,1-Dichloroethane	75-34-3	6.1e-7	<	N	6.3e-7	<	N	6.2e-7	<	N	6.3e-7	<	N	6.3e-7	<	6.4e-7		6.3e-7	<	N	6.2e-7	6.3e-7
1,2-Dichloroethane	107-06-2	6.5e-7	<,J	P	6.7e-7	<,J	P	6.6e-7	<	N	6.7e-7	<	N	6.7e-7	<,J	6.8e-7		6.7e-7	<,J	P	6.6e-7	6.7e-7
1,1-Dichloroethene	75-35-4	6.5e-7	<,J	P	7.6e-7	<,J	P	6.6e-7	<,J	P	6.7e-7	<,J	P	7.6e-7	<,J	7.8e-7		7.6e-7	<,J	P	6.6e-7	7.2e-7
cis-1,2-Dichloroethene	156-59-2	6.1e-7	<	N	6.3e-7	<	N	6.2e-7	<	N	6.3e-7	<	N	6.3e-7	<	6.4e-7		6.3e-7	<	N	6.2e-7	6.3e-7
trans-1,2-Dichloroethene	156-60-5	6.9e-7	<	N	6.7e-7	<	N	6.6e-7	<	N	7.1e-7	<	N	7.1e-7	<	7.3e-7		7.1e-7	<	N	6.8e-7	6.9e-7
1,2-Dichloropropane	78-87-5	5.3e-7	<	N	5.5e-7	<,J	P	5.4e-7	<	N	5.5e-7	<	N	5.5e-7	<,J	5.6e-7		5.5e-7	<,J	P	5.3e-7	5.5e-7
1,3-Dichloropropane	142-28-9	6.9e-7	<	N	7.2e-7	<	N	7.0e-7	<	N	7.1e-7	<	N	7.2e-7	<	7.3e-7		7.2e-7	<	N	7.0e-7	7.2e-7
2,2-Dichloropropane	594-20-7	6.5e-7	<	N	6.7e-7	<	N	6.6e-7	<	N	6.7e-7	<	N	6.7e-7	<	6.8e-7		6.7e-7	<	N	6.6e-7	6.7e-7
1,1-Dichloropropene	563-58-6	7.3e-7	<	N	7.6e-7	<	N	7.4e-7	<	N	7.6e-7	<	N	7.6e-7	<	7.7e-7		7.6e-7	<	N	7.4e-7	7.6e-7
cis-1,3-Dichloropropene	10061-01-5	5.3e-7	<	N	5.5e-7	<	N	5.4e-7	<	N	5.5e-7	<	N	5.5e-7	<	5.6e-7		5.5e-7	<	N	5.3e-7	5.5e-7
trans-1,3-Dichloropropene	10061-02-6	6.1e-7	<	N	6.3e-7	<	N	6.2e-7	<	N	6.3e-7	<	N	6.3e-7	<	6.4e-7		6.3e-7	<	N	6.2e-7	6.3e-7
Ethylbenzene	100-41-4	3.8e-7	<	N	3.9e-7	<	N	3.8e-7	<	N	3.9e-7	<	N	3.9e-7	<	4.0e-7		3.9e-7	<	N	3.8e-7	3.9e-7
Hexachlorobutadiene	87-68-3	9.0e-7	<	N	9.3e-7	<	N	9.1e-7	<	N	9.7e-7	<	N	9.7e-7	<	9.9e-7		9.7e-7	<	N	9.0e-7	9.5e-7
2-Hexanone	591-78-6	2.3e-6	<	N	2.4e-6	<	N	2.3e-6	<	N	2.4e-6	<	N	2.4e-6	<	2.4e-6		2.4e-6	<	N	2.3e-6	2.4e-6
Isopropylbenzene	98-82-8	2.9e-7	<	N	2.9e-7	<	N	2.9e-7	<	N	2.9e-7	<	N	2.9e-7	<	3.0e-7		2.9e-7	<	N	2.9e-7	2.9e-7
p-Isopropyltoluene	99-87-6	4.5e-7	<	N	4.6e-7	<	N	4.5e-7	<	N	4.6e-7	<	N	4.6e-7	<	4.7e-7		4.6e-7	<	N	4.5e-7	4.6e-7
Methylene chloride	75-09-2	7.3e-5	E,B	A	7.2e-6	B	A	4.5e-6	<,B	A	1.8e-6	<,J,B	A	7.3e-5	E,B	9.1e-5		7.3e-5	E,B	A	3.9e-5	4.5e-6
4-Methyl-2-pentanone	108-10-1	2.4e-6	<	N	2.5e-6	<	N	2.4e-6	<	N	2.5e-6	<	N	2.5e-6	<	2.5e-6		2.5e-6	<	N	2.4e-6	2.5e-6
Naphthalene	91-20-3	8.6e-7	<	N	8.8e-7	<	N	8.7e-7	<	N	8.8e-7	<	N	8.8e-7	<	9.0e-7		8.8e-7	<	N	8.6e-7	8.8e-7
n-Propylbenzene	103-65-1	2.7e-7	<	N	2.8e-7	<	N	2.7e-7	<	N	2.8e-7	<	N	2.8e-7	<	2.8e-7		2.8e-7	<	N	2.7e-7	2.8e-7
Styrene	100-42-5	3.2e-7	<	N	3.3e-7	<	N	3.2e-7	<	N	3.3e-7	<	N	3.3e-7	<	3.3e-7		3.3e-7	<	N	3.2e-7	3.3e-7
1,1,1,2-Tetrachloroethane	630-20-6	4.0e-7	<	N	4.2e-7	<	N	4.1e-7	<	N	4.2e-7	<	N	4.2e-7	<	4.3e-7		4.2e-7	<	N	4.1e-7	4.2e-7
1,1,2,2-Tetrachloroethane	79-34-5	9.0e-7	<	N	9.3e-7	<	N	9.1e-7	<	N	9.7e-7	<	N	9.7e-7	<	9.9e-7		9.7e-7	<	N	9.0e-7	9.5e-7
Tetrachloroethene	127-18-4	6.1e-7	<	N	6.3e-7	<	N	6.2e-7	<	N	6.3e-7	<	N	6.3e-7	<	6.4e-7		6.3e-7	<	N	6.2e-7	6.3e-7
Toluene	108-88-3	7.8e-7	<,J	P	1.2e-6	<,J	P	1.2e-6	<,J	P	7.6e-7	<,J	P	1.2e-6	<,J	1.5e-6		1.2e-6	<,J	P	1.0e-6	9.7e-7
1,2,3-Trichlorobenzene	87-61-6	8.6e-7	<	N	8.8e-7	<	N	8.7e-7	<	N	8.8e-7	<	N	8.8e-7	<	9.0e-7		8.8e-7	<	N	8.6e-7	8.8e-7
1,2,4-Trichlorobenzene	120-82-1	9.0e-7	<	N	9.3e-7	<	N	9.1e-7	<	N	9.7e-7	<	N	9.7e-7	<	9.9e-7		9.7e-7	<	N	9.0e-7	9.5e-7
1,1,1-Trichloroethane	71-55-6	7.8e-7	<	N	8.0e-7	<	N	7.8e-7	<	N	8.0e-7	<	N	8.0e-7	<	8.1e-7		8.0e-7	<	N	7.8e-7	8.0e-7
1,1,2-Trichloroethane	79-00-5	6.9e-7	<	N	7.2e-7	<	N	7.0e-7	<	N	7.1e-7	<	N	7.2e-7	<	7.3e-7		7.2e-7	<	N	7.0e-7	7.2e-7
Trichloroethene	79-01-6	6.5e-7	<	N	6.7e-7	<	N	6.6e-7	<	N	6.7e-7	<	N	6.7e-7	<	6.8e-7		6.7e-7	<	N	6.6e-7	6.7e-7
Trichlorofluoromethane	75-69-4	6.5e-7	<,J	P	6.7e-7	<,J	P	6.6e-7	<,J	P	6.7e-7	<,J	P	6.7e-7	<,J	6.8e-7		6.7e-7	<,J	P	6.6e-7	6.7e-7
1,2,3-Trichloropropane	96-18-4	9.8e-7	<	N	1.0e-6	<	N	9.9e-7	<	N	1.0e-6	<	N	1.0e-6	<	1.0e-6		1.0e-6	<	N	9.8e-7	1.0e-6
1,2,4-Trimethylbenzene	95-63-6	4.1e-7	<	N	4.2e-7	<	N	4.1e-7	<	N	4.2e-7	<	N	4.2e-7	<	4.3e-7		4.2e-7	<	N	4.1e-7	4.2e-7
1,3,5-Trimethylbenzene	108-67-8	2.4e-7	<	N	2.5e-7	<	N	2.4e-7	<	N	2.5e-7	<	N	2.5e-7	<	2.5e-7		2.5e-7	<	N	2.4e-7	2.5e-7
Vinyl chloride	75-01-4	5.3e-7	<,J	P	7.6e-7	<,J	P	5.4e-7	<,J	P	7.1e-7	<,J	P	7.6e-7	<,J	8.7e-7		7.6e-7	<,J	P	5.3e-7	7.4e-7
m-Xylene & p-Xylene	36777-61-1	1.8e-6	<	N	1.9e-6	<	N	1.8e-6	<	N	1.9e-6	<	N	1.9e-6	<	1.9e-6		1.9e-6	<	N	1.8e-6	1.9e-6
o-Xylene	95-47-6	3.1e-7	<	N	3.3e-7	<,J	P	3.2e-7	<	N	3.2e-7	<,J	P	3.3e-7	<,J	3.3e-7		3.3e-7	<,J	P	3.2e-7	3.3e-7

Table B-18. 0031 emission rates - grams per second comparisons.

TICs	CAS Registry Number	STRT-1 g/s	Flag	Project Specific Flag	END-1 g/s	Flag	Project Specific Flag	STRT-2 g/s	Flag	Project Specific Flag	END-2 g/s	Flag	Project Specific Flag	Max value g/s	Flag	Avg+2σ g/s	Flag	Results g/s	Flag	Project Specific Flag	STRT Run Avgs µg/dscm	END Run Avgs µg/dscm
1-Heptene	592-76-7	2.2e-7	N,J,M	P										2.2e-7	N,J,M			2.2e-7	N,J,M	P	2.2e-7	
Benzonitrile	100-47-0				8.0e-7	N,J,M	P	3.0e-7	N,J,M	P	2.0e-7	N,J,M	P	8.0e-7	N,J,M	1.1e-6		8.0e-7	N,J,M	P	3.0e-7	5.0e-7
Butane, 1-chloro-	109-69-3	2.3e-7	N,J,M	P										2.3e-7	N,J,M			2.3e-7	N,J,M	P	2.3e-7	
Cyclobutane, ethenyl-	2597-49-1				5.0e-7	N,J,M	P							5.0e-7	N,J,M			5.0e-7	N,J,M	P		5.0e-7
Cyclohexane, hexyl-	4292-75-5	2.4e-7	N,J,M	P										2.4e-7	N,J,M			2.4e-7	N,J,M	P	2.4e-7	
Cyclohexane, methyl-	108-87-2	4.5e-7	N,J,M	P	8.4e-7	N,J,M	P	8.3e-7	N,J,M	P	5.0e-7	N,J,M	P	8.4e-7	N,J,M	1.1e-6		8.4e-7	N,J,M	P	6.4e-7	6.7e-7
Cyclohexene	110-83-8	4.1e-7	N,J,M	P	1.5e-7	N,J,M	P	7.4e-7	N,J,M	P	1.1e-7	N,J,M	P	7.4e-7	N,J,M	9.4e-7		7.4e-7	N,J,M	P	5.8e-7	1.3e-7
Cyclopentane, 1,2-dimethyl-	2452-99-5							2.2e-7	N,J,M	P				2.2e-7	N,J,M			2.2e-7	N,J,M	P	2.2e-7	
Cyclopentane, 1,2-dimethyl-, t	822-50-4				3.3e-7	N,J,M	P				1.3e-7	N,J,M	P	3.3e-7	N,J,M	5.2e-7		3.3e-7	N,J,M	P		2.3e-7
Cyclopentane, ethyl-	1640-89-7	1.1e-7	N,J,M	P	1.7e-7	N,J,M	P	1.5e-7	N,J,M	P				1.7e-7	N,J,M	2.0e-7		1.7e-7	N,J,M	P	1.3e-7	1.7e-7
Decane	124-18-5	4.9e-7	N,J,M	P										4.9e-7	N,J,M			4.9e-7	N,J,M	P	4.9e-7	
Decane, 2,2,5-trimethyl-	62237-96-1							2.5e-7	N,J,M	P				2.5e-7	N,J,M			2.5e-7	N,J,M	P	2.5e-7	
Decane, 2,9-dimethyl-	1002-17-1	2.6e-7	N,J,M	P										2.6e-7	N,J,M			2.6e-7	N,J,M	P	2.6e-7	
Dodecane	112-40-3	1.3e-4	N,J,M	P	1.1e-4	N,J,M	P	9.1e-5	N,J,M	P	7.1e-5	N,J,M	P	1.3e-4	N,J,M	1.5e-4		1.3e-4	N,J,M	P	1.1e-4	9.0e-5
Dodecane, 6-methyl-	6044-71-9							2.1e-7	N,J,M	P				2.1e-7	N,J,M			2.1e-7	N,J,M	P	2.1e-7	
Hexadecane	544-76-3				8.8e-7	N,J,M	P							8.8e-7	N,J,M			8.8e-7	N,J,M	P		8.8e-7
Hexane, 2,4-dimethyl-	589-43-5	4.5e-7	N,J,M	P	7.6e-7	N,J,M	P	8.3e-7	N,J,M	P	4.0e-7	N,J,M	P	8.3e-7	N,J,M	1.0e-6		8.3e-7	N,J,M	P	6.4e-7	5.8e-7
Hexane, 2-methyl-	591-76-4	6.9e-7	N,J,M	P	1.3e-6	N,J,M	P	1.2e-6	N,J,M	P	1.0e-6	N,J,M	P	1.3e-6	N,J,M	1.6e-6		1.3e-6	N,J,M	P	9.7e-7	1.2e-6
Hexane, 3-methyl-	589-34-4	1.6e-6	N,J,M	P	3.2e-6	N,J,M	P	1.1e-6	N,J,M	P	1.4e-6	N,J,M	P	3.2e-6	N,J,M	3.7e-6		3.2e-6	N,J,M	P	1.3e-6	2.3e-6
Methane, trichloronitro-	76-06-2				1.5e-6	N,J,M	P							1.5e-6	N,J,M			1.5e-6	N,J,M	P		1.5e-6
Octane	111-65-9	1.1e-7	N,J,M	P										1.1e-7	N,J,M			1.1e-7	N,J,M	P	1.1e-7	
Pentane, 2,3-dimethyl-	565-59-3	7.3e-7	N,J,M	P	1.3e-7	N,J,M	P	4.5e-7	N,J,M	P	5.9e-7	N,J,M	P	7.3e-7	N,J,M	9.9e-7		7.3e-7	N,J,M	P	5.9e-7	3.6e-7
Pentane, 3,3-dimethyl-	562-49-2				2.5e-7	N,J,M	P							2.5e-7	N,J,M			2.5e-7	N,J,M	P		2.5e-7
Pentane, 3-ethyl-	617-78-7							1.4e-7	N,J,M	P	1.3e-7	N,J,M	P	1.4e-7	N,J,M	1.5e-7		1.4e-7	N,J,M	P	1.4e-7	1.3e-7
Tetradecane	629-59-4	3.8e-6	N,J,M	P	4.2e-6	N,J,M	P	4.0e-6	N,J,M	P	5.9e-6	N,J,M	P	5.9e-6	N,J,M	6.4e-6		5.9e-6	N,J,M	P	3.9e-6	5.0e-6
Tridecane	629-50-5	1.1e-5	N,J,M	P	1.3e-5	N,J,M	P	3.4e-7	N,J,M	P	1.3e-5	N,J,M	P	1.3e-5	N,J,M	2.2e-5		1.3e-5	N,J,M	P	5.9e-6	1.3e-5
Undecane	1120-21-4	4.1e-6	N,J,M	P	2.1e-6	N,J,M	P	9.9e-7	N,J,M	P	5.0e-7	N,J,M	P	4.1e-6	N,J,M	5.1e-6		4.1e-6	N,J,M	P	2.5e-6	1.3e-6
Undecane, 2,6-dimethyl-	17301-23-4	4.5e-7	N,J,M	P				1.9e-7	N,J,M	P	3.5e-7	N,J,M	P	4.5e-7	N,J,M	5.9e-7		4.5e-7	N,J,M	P	3.2e-7	3.5e-7
Undecane, 5-methyl-	1632-70-8	2.6e-6	N,J,M	P	7.6e-7	N,J,M	P	8.7e-7	N,J,M	P	7.6e-7	N,J,M	P	2.6e-6	N,J,M	3.1e-6		2.6e-6	N,J,M	P	1.7e-6	7.6e-7
Total Analytes																		3.5e-4				
Total Detected Analytes																		3.0e-4				
Total Semivolatiles in lbs/hr																		0.002769813				

Table B-19. 0050 emission rates - grams per second comparisons.

Analyte	STRT-1 g/s	Flag	END-1 g/s	Flag	STRT-2 g/s	Flag	END-2 g/s	Flag	Max value g/s	Flag	Avg+2σ g/s	Flag	Results g/s	Flag	STRT Run Avgs g/s	END Run Avgs g/s
Chloride (as HCl)	3.3e-4	B	2.9e-4	B	3.2e-4	B	3.2e-4	B	3.3e-4	B	3.4e-4		3.3e-4	B	3.2e-4	3.1e-4
Chloride (as Cl2)	3.3e-5	<	5.8e-5	B	3.0e-5	<	3.2e-5	<	5.8e-5	B	6.4e-5		5.8e-5	B	3.2e-5	4.5e-5
Fluoride (as HF)	4.5e-5	<	4.0e-5	<	4.1e-5	<	4.3e-5	<	4.5e-5	<	4.7e-5		4.5e-5	<	4.3e-5	4.2e-5
Nitrate (as HNO3)	1.4e-3		1.1e-3		9.4e-4		7.9e-4		1.4e-3		1.5e-3		1.4e-3		1.1e-3	9.2e-4
Nitrite (as HNO2)	1.8e-4	<	3.8e-4	<	1.7e-4	<	3.4e-4	<	3.8e-4	<	4.9e-4		3.8e-4	<	1.8e-4	3.6e-4
Particulate	4.0e-4	B	2.9e-4	B	1.2e-4		8.9e-5	B	4.0e-4	B	5.2e-4		4.0e-4	B	2.6e-4	1.9e-4

maximum hourly emissions

Table B-19. 0050 emission rates - grams per second comparisons.

Analyte	STRT-1 g/s	Flag	END-1 g/s	Flag	STRT-2 g/s	Flag	END-2 g/s	Flag	Max value g/s	Flag	Avg+2σ g/s	Flag	Results g/s	Flag	STRT Run Avgs g/s	END Run Avgs g/s
Chloride (as HCl)	3.3e-4	B	2.9e-4	B	3.2e-4	B	3.2e-4	B	3.3e-4	B	3.4e-4		3.3e-4	B	3.2e-4	3.1e-4
Chloride (as Cl2)	3.3e-5	<	5.8e-5	B	3.0e-5	<	3.2e-5	<	5.8e-5	B	6.4e-5		5.8e-5	B	3.2e-5	4.5e-5
Fluoride (as HF)	4.5e-5	<	4.0e-5	<	4.1e-5	<	4.3e-5	<	4.5e-5	<	4.7e-5		4.5e-5	<	4.3e-5	4.2e-5
Nitrate (as HNO3)	1.4e-3		1.1e-3		9.4e-4		7.9e-4		1.4e-3		1.5e-3		1.4e-3		1.1e-3	9.2e-4
Nitrite (as HNO2)	1.8e-4	<	3.8e-4	<	1.7e-4	<	3.4e-4	<	3.8e-4	<	4.9e-4		3.8e-4	<	1.8e-4	3.6e-4
Particulate	4.0e-4	B	2.9e-4	B	1.2e-4		8.9e-5	B	4.0e-4	B	5.2e-4		4.0e-4	B	2.6e-4	1.9e-4

maximum hourly emissions

Table B-20. 0060 emission rates - grams per second comparisons.

Analyte	CAS Registry Number	STRT-1 g/s	Flag	Project Specific Flags	END-1 g/s	Flag	Project Specific Flags	STRT-2 g/s	Flag	Project Specific Flags	END-2 g/s	Flag	Project Specific Flags	Max value g/s	Flag	Avg+2σ g/s	Flag	Results g/s	Flag	Project Specific Flag	STRT Run Avgs g/s	END Run Avgs g/s
Aluminum (Al)	7429-90-5	1.6e-5		A	2.5e-5		A	8.3e-6		A	8.2e-6		A	2.5e-5		3.4e-5		2.5e-5		A	1.2e-5	1.7e-5
Antimony (Sb)	7440-36-0	5.3e-7	B	A	4.8e-7	B	A	4.9e-7	B	A	4.6e-7	B	A	5.3e-7	B	5.5e-7		5.3e-7		A	5.1e-7	4.7e-7
Arsenic (As)	7440-38-2	1.8e-7	<,B	P	1.5e-7	<	N	1.8e-7	<	N	1.8e-7	<	N	1.8e-7	<,B	2.0e-7		1.8e-7		P	1.8e-7	1.6e-7
Barium (Ba)	7440-39-3	7.7e-7	B	A	9.4e-7	B	A	5.6e-7	B	A	5.3e-7	B	A	9.4e-7	B	1.1e-6		9.4e-7		A	6.6e-7	7.3e-7
Beryllium (Be)	7440-41-7	7.4e-8	<,B	P	6.1e-8	<,B	P	7.1e-8	<,B	P	7.3e-8	<,B	P	7.4e-8	<,B	8.3e-8		7.4e-8		P	7.3e-8	6.7e-8
Cadmium (Cd)	7440-43-9	5.3e-8	B	A	7.7e-8	B	A	3.0e-8	<,B	P	3.0e-8	<	N	7.7e-8	B	1.0e-7		7.7e-8		P	4.1e-8	5.3e-8
Chromium (Cr)	7440-47-3	3.4e-7		A	4.4e-7		A	2.7e-7		A	5.7e-7		A	5.7e-7		5.2e-7		5.2e-7		A	3.1e-7	5.1e-7
Cobalt (Co)	7440-48-4	3.1e-7	B	A	2.5e-7	<	N	3.0e-7	<	N	3.0e-7	<	N	3.1e-7	B	3.5e-7		3.1e-7		P	3.0e-7	2.8e-7
Copper (Cu)	7440-50-8	4.9e-7	B	A	3.4e-7	B	A	2.5e-7	B	A	1.6e-7	<,B	P	4.9e-7	B	6.0e-7		4.9e-7		P	3.7e-7	2.5e-7
Lead (Pb)	7439-92-1	1.5e-7	<,B	P	1.2e-7	B	A	1.5e-7	<,B	P	1.3e-7	<,B	P	1.5e-7	<,B	1.8e-7		1.5e-7		P	1.5e-7	1.3e-7
Manganese (Mn)	7439-96-5	2.2e-6		A	2.2e-6		A	4.2e-6		A	8.0e-6		A	8.0e-6		5.1e-6		5.1e-6		A	3.2e-6	5.1e-6
Mercury (Hg)	7439-97-6	1.1e-5		A	1.4e-5		P	1.2e-5		P	1.2e-5		P	1.4e-5		1.5e-5		1.4e-5		P	1.2e-5	1.3e-5
Nickel (Ni)	7440-02-0	5.7e-7	B	A	5.6e-7	B	A	4.9e-7	B	A	4.6e-7	B	A	5.7e-7	B	6.3e-7		5.7e-7		A	5.3e-7	5.1e-7
Selenium (Se)	7782-49-2	3.7e-7	B	A	2.0e-7	<	P	2.9e-7	B	A	2.6e-7	B	A	3.7e-7	B	4.5e-7		3.7e-7		P	3.3e-7	2.3e-7
Silver (Ag)	7440-22-4	3.0e-7	<	N	2.4e-7	<	N	2.9e-7	<	N	2.9e-7	<	N	3.0e-7	<	3.3e-7		3.0e-7		N	2.9e-7	2.7e-7
Thallium (Tl)	7440-28-0	2.9e-7	<	N	2.2e-7	<	N	2.7e-7	<	N	2.7e-7	<	N	2.9e-7	<	3.3e-7		2.9e-7		N	2.8e-7	2.5e-7
Vanadium (V)	7440-62-2	3.1e-7	<	N	2.5e-7	<	N	3.0e-7	<	N	3.0e-7	<	N	3.1e-7	<	3.5e-7		3.1e-7		N	3.0e-7	2.8e-7
Zinc (Zn)	7440-66-6	7.0e-6		A	1.1e-5		A	3.3e-6		A	1.9e-6		A	1.1e-5		1.5e-5		1.1e-5		A	5.1e-6	6.6e-6
Total Metals																		6.1e-5				
Total Detected Metals																		6.0e-5				

Table B-21. 0060 blank corrected emission rates - grams per second comparisons.

Analyte	CAS Registry Number	STRT-1 g/s	Flag	Project Specific Flags	END-1 g/s	Flag	Project Specific Flags	STRT-2 g/s	Flag	Project Specific Flags	END-2 g/s	Flag	Project Specific Flags	Max value g/s	Flag	Avg+2σ g/s	Flag	Results g/s	Flag	Project Specific Flag	STRT Run Avgs g/s	END Run Avgs g/s
Aluminum (Al)	7429-90-5	1.5e-5		A	2.4e-5		A	7.5e-6		A	7.5e-6		A	2.4e-5		3.2e-5		2.4e-5		A	1.1e-5	1.6e-5
Antimony (Sb)	7440-36-0	1.2e-7	B	A	1.4e-7	B	A	1.0e-7	B	A	1.0e-7	B	A	1.4e-7	B	1.6e-7		1.4e-7		A	1.1e-7	1.2e-7
Arsenic (As)	7440-38-2	9.9e-8	<,B	P	8.1e-8	<	N	9.4e-8	<	N	9.4e-8	<	N	9.9e-8	<,B	1.1e-7		9.9e-8		P	9.6e-8	8.7e-8
Barium (Ba)	7440-39-3	2.5e-7	B	A	5.2e-7	B	A	5.9e-8	B	A	5.9e-8	B	A	5.2e-7	B	7.4e-7		5.2e-7		A	1.5e-7	2.9e-7
Beryllium (Be)	7440-41-7	5.2e-8	<,B	P	4.2e-8	<,B	P	4.9e-8	<,B	P	4.9e-8	<,B	P	5.2e-8	<,B	5.8e-8		5.2e-8		P	5.0e-8	4.6e-8
Cadmium (Cd)	7440-43-9	4.6e-8	B	A	7.1e-8	B	A	2.3e-8	<,B	P	2.3e-8	<,B	N	7.1e-8	B	9.5e-8		7.1e-8		P	3.5e-8	4.7e-8
Chromium (Cr)	7440-47-3	1.3e-7		A	2.7e-7		A	7.4e-8		A	7.4e-8		A	2.7e-7		3.6e-7		2.7e-7		A	1.0e-7	1.7e-7
Cobalt (Co)	7440-48-4	3.1e-7	B	A	2.5e-7	<	N	3.0e-7	<	N	3.0e-7	<	N	3.1e-7	B	3.5e-7		3.1e-7		P	3.0e-7	2.7e-7
Copper (Cu)	7440-50-8	5.0e-7	B	A	3.4e-7	B	A	2.5e-7	B	A	2.5e-7	B	P	5.0e-7	B	6.1e-7		5.0e-7		P	3.7e-7	2.9e-7
Lead (Pb)	7439-92-1	1.0e-7	<,B	P	8.2e-8	B	A	1.1e-7	<,B	P	1.1e-7	<,B	P	1.1e-7	<,B	1.2e-7		1.1e-7		P	1.0e-7	9.5e-8
Manganese (Mn)	7439-96-5	2.0e-6		A	2.0e-6		A	4.0e-6		A	4.0e-6		A	4.0e-6		5.0e-6		4.0e-6		A	3.0e-6	3.0e-6
Mercury (Hg)	7439-97-6	1.1e-5		A	1.4e-5		P	1.2e-5		P	1.2e-5		P	1.4e-5		1.5e-5		1.4e-5		P	1.2e-5	1.3e-5
Nickel (Ni)	7440-02-0	1.8e-7	B	A	2.4e-7	B	A	1.1e-7	B	A	1.1e-7	B	A	2.4e-7	B	3.0e-7		2.4e-7		A	1.5e-7	1.8e-7
Selenium (Se)	7782-49-2	1.1e-17	B	A	9.4e-18	<	P	1.1e-17	B	A	1.1e-17	B	A	1.1e-17	B	1.3e-17		1.1e-17		P	1.1e-17	1.0e-17
Silver (Ag)	7440-22-4	3.0e-7	<	N	2.4e-7	<	N	2.9e-7	<	N	2.9e-7	<	N	3.0e-7	<	3.3e-7		3.0e-7		N	2.9e-7	2.7e-7
Thallium (Tl)	7440-28-0	2.9e-7	<	N	2.2e-7	<	N	2.7e-7	<	N	2.7e-7	<	N	2.9e-7	<	3.3e-7		2.9e-7		N	2.8e-7	2.5e-7
Vanadium (V)	7440-62-2	3.1e-7	<	N	2.5e-7	<	N	3.0e-7	<	N	3.0e-7	<	N	3.1e-7	<	3.5e-7		3.1e-7		N	3.0e-7	2.7e-7
Zinc (Zn)	7440-66-6	6.4e-6		A	1.1e-5		A	2.8e-6		A	2.8e-6		A	1.1e-5		1.5e-5		1.1e-5		A	4.6e-6	6.8e-6
Total Metals																		5.6e-5				
Total Detected Metals																		5.5e-5				

Table B-22. SVOC concentration-basis.

Analyte	CAS Registry Number	STRT-1 µg/dscm	Flag	Project Specific Flag	END-1 µg/dscm	Flag	Project Specific Flag	STRT-2 µg/dscm	Flag	Project Specific Flag	END-2 µg/dscm	Flag	Project Specific Flag	Max value µg/dscm	Flag	Avg+2σ µg/dscm	Flag	Results µg/dscm	Flag	Project Specific Flag	STRT Run Avgs µg/dscm	END Run Avgs µg/dscm
Acenaphthene	83-32-9	3.1e0	<	N	3.2e0	<	N	5.2e0	<,J	P	3.0e0	<	N	5.2e0	<,J	5.7e0		5.2e0		P	4.2e0	3.1e0
Acenaphthylene	208-96-8	3.0e0	<	N	3.1e0	<	N	5.2e0	<,J	P	2.9e0	<	N	5.2e0	<,J	5.7e0		5.2e0		P	4.1e0	3.0e0
Acetophenone	98-86-2	1.6e1	<,J	P	1.2e1	<,J	P	1.4e1	<,J	P	1.1e1	<,J	P	1.6e1	<,J	1.7e1		1.6e1		P	1.5e1	1.2e1
Aniline	62-53-3	3.5e1	<	N	3.6e1	<	N	4.8e1	<	N	3.4e1	<	N	4.8e1	<	5.2e1		4.8e1		N	4.2e1	3.5e1
Anthracene	120-12-7	3.0e0	<	N	3.1e0	<	N	5.2e0	<,J	P	2.9e0	<	N	5.2e0	<,J	5.7e0		5.2e0		P	4.1e0	3.0e0
Benzidine	92-87-5	2.1e2	<	N	2.2e2	<	N	2.6e2	<	N	2.1e2	<	N	2.6e2	<	2.7e2		2.6e2		N	2.4e2	2.1e2
Benzoic acid	65-85-0	1.6e3	E	P	8.5e2	<,E	P	7.4e2	E	P	8.3e2	E	P	1.6e3	E	1.8e3		1.6e3		P	1.2e3	8.4e2
Benzo(a)anthracene	56-55-3	3.8e0	<	N	3.9e0	<	N	6.1e0	<,J	P	3.7e0	<	N	6.1e0	<,J	6.7e0		6.1e0		P	5.0e0	3.8e0
Benzo(a)pyrene	50-32-8	4.2e1	<	N	4.3e1	<	N	4.5e1	<,J	P	4.0e1	<	N	4.5e1	<,J	4.7e1		4.5e1		P	4.3e1	4.1e1
Benzo(b)fluoranthene	205-99-2	9.6e1	<	N	9.8e1	<	N	9.7e1	<,J	P	9.2e1	<	N	9.8e1	<	1.0e2		9.8e1		P	9.6e1	9.5e1
Benzo(g,h,i)perylene	191-24-2	5.4e1	<	N	5.6e1	<	N	5.8e1	<,J	P	5.2e1	<	N	5.8e1	<,J	6.0e1		5.8e1		P	5.6e1	5.4e1
Benzo(k)fluoranthene	207-08-9	1.4e2	<	N	1.4e2	<	N	1.4e2	<,J	P	1.3e2	<	N	1.4e2	<	1.4e2		1.4e2		P	1.4e2	1.4e2
Benzyl alcohol	100-51-6	1.8e2	<	N	1.9e2	<	N	1.8e2	<	N	1.8e2	<	N	1.9e2	<	1.9e2		1.9e2		N	1.8e2	1.8e2
bis(2-Chloroethoxy)methane	111-91-1	3.2e0	<	N	3.3e0	<	N	4.5e0	<	N	3.1e0	<	N	4.5e0	<	4.9e0		4.5e0		N	3.9e0	3.2e0
bis(2-Chloroethyl)ether	111-44-4	3.5e0	<	N	3.6e0	<	N	5.2e0	<,J	P	3.4e0	<	N	5.2e0	<,J	5.6e0		5.2e0		P	4.3e0	3.5e0
bis(2-Ethylhexyl)phthalate	117-81-7	3.8e1	<,J	A	7.2e1	<	P	4.2e1	<,J	A	4.9e1	<,J	A	7.2e1	<	8.1e1		7.2e1		P	4.0e1	6.1e1
4-Bromophenyl-phenylether	101-55-3	3.0e0	<	N	3.1e0	<	N	5.8e0	<,J	P	2.9e0	<	N	5.8e0	<,J	6.5e0		5.8e0		P	4.4e0	3.0e0
Butylbenzylphthalate	85-68-7	4.2e0	<	N	4.3e0	<	N	6.1e0	<,J	P	4.0e0	<	N	6.1e0	<,J	6.6e0		6.1e0		P	5.1e0	4.1e0
Carbazole	86-74-8	4.2e0	<	N	4.3e0	<	N	5.8e0	<,J	P	4.0e0	<	N	5.8e0	<,J	6.2e0		5.8e0		P	5.0e0	4.1e0
4-Chloro-3-methylphenol	59-50-7	5.4e0	<	N	5.6e0	<	N	1.0e1	<,J	N	5.2e0	<	N	1.0e1	<,J	1.1e1		1.0e1		N	7.7e0	5.4e0
4-Chloroaniline	106-47-8	2.9e1	<	N	2.9e1	<	N	3.6e1	<	N	2.8e1	<	N	3.6e1	<	3.7e1		3.6e1		N	3.2e1	2.9e1
2-Chloronaphthalene	91-58-7	3.0e0	<	N	3.0e0	<	N	4.8e0	<,J	P	2.9e0	<	N	4.8e0	<,J	5.3e0		4.8e0		P	3.9e0	3.0e0
2-Chlorophenol	95-57-8	3.5e0	<	N	3.6e0	<	N	4.8e0	<,J	P	3.4e0	<	N	4.8e0	<,J	5.2e0		4.8e0		P	4.2e0	3.5e0
4-Chlorophenyl phenyl ether	7005-72-36	3.5e0	<	N	3.6e0	<	N	5.5e0	<,J	P	3.4e0	<	N	5.5e0	<,J	6.0e0		5.5e0		P	4.5e0	3.5e0
Chrysene	218-01-9	3.8e0	<	N	3.9e0	<	N	6.8e0	<,J	P	3.7e0	<	N	6.8e0	<,J	7.5e0		6.8e0		P	5.3e0	3.8e0
Di-n-butylphthalate	84-74-2	3.2e1	<,J	P	3.3e1	<,J	P	3.6e1	<,J	P	3.1e1	<,J	P	3.6e1	<,J	3.7e1		3.6e1		P	3.4e1	3.2e1
Di-n-octylphthalate	117-84-0	5.1e1	<,J	P	5.2e1	<,J	P	5.2e1	<,J	P	4.9e1	<,J	P	5.2e1	<,J	5.4e1		5.2e1		P	5.1e1	5.1e1
Dibenz(a,h)anthracene	53-70-3	5.4e1	<	N	5.6e1	<	N	5.5e1	<,J	P	5.2e1	<	N	5.6e1	<	5.7e1		5.6e1		P	5.5e1	5.4e1
Dibenzofuran	132-64-9	3.5e0	<	N	3.6e0	<	N	5.5e0	<,J	P	3.4e0	<	N	5.5e0	<,J	6.0e0		5.5e0		P	4.5e0	3.5e0
1,2-Dichlorobenzene	95-50-1	3.5e0	<	N	3.6e0	<	N	5.2e0	<,J	P	3.4e0	<	N	5.2e0	<,J	5.6e0		5.2e0		P	4.3e0	3.5e0
1,3-Dichlorobenzene	541-73-1	3.8e0	<	N	3.9e0	<	N	5.5e0	<,J	P	3.7e0	<	N	5.5e0	<,J	5.9e0		5.5e0		P	4.7e0	3.8e0
1,4-Dichlorobenzene	106-46-7	5.1e0	<,J	P	3.9e0	<,J	P	5.2e0	<,J	P	6.5e0	<,J	P	6.5e0	<,J	7.2e0		6.5e0		P	5.1e0	5.2e0
3,3'-Dichlorobenzidine	91-94-1	3.5e1	<	N	3.6e1	<	N	4.2e1	<	N	3.4e1	<	N	4.2e1	<	4.4e1		4.2e1		N	3.9e1	3.5e1
2,4-Dichlorophenol	120-83-2	4.2e0	<	N	4.3e0	<	N	5.8e0	<	N	4.0e0	<	N	5.8e0	<	6.2e0		5.8e0		N	5.0e0	4.1e0
Diethylphthalate	84-66-2	5.1e0	<,J	P	4.9e0	<	N	7.1e0	<,J	P	4.6e0	<	N	7.1e0	<,J	7.7e0		7.1e0		P	6.1e0	4.8e0
Dimethyl phthalate	131-11-3	3.1e0	<	N	3.1e0	<	N	5.2e0	<,J	P	3.0e0	<	N	5.2e0	<,J	5.7e0		5.2e0		P	4.1e0	3.0e0
2,4-Dimethylphenol	105-67-9	1.9e1	<	N	1.9e1	<	N	2.0e1	<	N	1.8e1	<	N	2.0e1	<	2.1e1		2.0e1		N	1.9e1	1.9e1
4,6-Dinitro-2-methylphenol	534-52-1	4.2e1	<	N	4.3e1	<	N	4.5e1	<	N	4.0e1	<	N	4.5e1	<	4.7e1		4.5e1		N	4.3e1	4.1e1
2,4-Dinitrophenol	51-28-5	8.6e1	<	N	8.8e1	<	N	9.0e1	<	N	8.3e1	<	N	9.0e1	<	9.3e1		9.0e1		N	8.8e1	8.6e1
2,4-Dinitrotoluene	121-14-2	4.2e0	<	N	4.3e0	<	N	6.1e0	<,J	P	4.0e0	<	N	6.1e0	<,J	6.6e0		6.1e0		P	5.1e0	4.1e0
2,6-Dinitrotoluene	606-20-2	3.8e0	<	N	3.9e0	<	N	5.2e0	<,J	P	3.7e0	<	N	5.2e0	<,J	5.5e0		5.2e0		P	4.5e0	3.8e0
1,2-Diphenylhydrazine	122-66-7	3.1e0	<	N	3.2e0	<	N	5.2e0	<,J	P	3.0e0	<	N	5.2e0	<,J	5.7e0		5.2e0		P	4.2e0	3.1e0
Fluoranthene	206-44-0	3.2e0	<	N	3.3e0	<	N	5.5e0	<,J	P	3.1e0	<	N	5.5e0	<,J	6.1e0		5.5e0		P	4.3e0	3.2e0
Fluorene	86-73-7	3.2e0	<	N	3.3e0	<	N	5.2e0	<,J	P	3.1e0	<	N	5.2e0	<,J	5.7e0		5.2e0		P	4.2e0	3.2e0
Hexachlorocyclopentadiene	77-47-4	5.1e1	<	N	5.2e1	<	N	5.8e1	<	P	4.9e1	<	N	5.8e1	<	6.0e1		5.8e1		P	5.5e1	5.1e1
Hexachlorobenzene	118-74-1	3.5e0	<	N	3.6e0	<	N	5.2e0	<,J	P	3.4e0	<	N	5.2e0	<,J	5.6e0		5.2e0		P	4.3e0	3.5e0
Hexachlorobutadiene	87-68-3	4.8e0	<	N	4.9e0	<	N	6.5e0	<,J	P	4.6e0	<	N	6.5e0	<,J	6.9e0		6.5e0		P	5.6e0	4.8e0
Hexachloroethane	67-72-1	5.1e0	<	N	5.2e0	<	N	6.5e0	<,J	P	4.9e0	<	N	6.5e0	<,J	6.8e0		6.5e0		P	5.8e0	5.1e0
Indeno(1,2,3-cd)pyrene	193-39-5	4.8e1	<	N	4.9e1	<	N	4.8e1	<,J	P	4.6e1	<	N	4.9e1	<	5.0e1		4.9e1		P	4.8e1	4.8e1
Isophorone	78-59-1	3.2e0	<	N	3.3e0	<	N	5.2e0	<,J	P	3.1e0	<	N	5.2e0	<,J	5.7e0		5.2e0		P	4.2e0	3.2e0
2-Methylnaphthalene	91-57-6	3.2e0	<	N	3.3e0	<	N	4.8e0	<,J	P	3.1e0	<	N	4.8e0	<,J	5.3e0		4.8e0		P	4.0e0	3.2e0
2-Methylphenol	95-48-7	1.5e1	<	N	1.5e1	<	N	1.6e1	<	N	1.4e1	<	N	1.6e1	<	1.7e1		1.6e1		N	1.6e1	1.5e1
3-Methylphenol & 4-Methylphenol	65794-96-9	1.1e1	<	N	1.1e1	<	N	1.3e1	<	N	1.0e1	<	N	1.3e1	<	1.3e1		1.3e1		N	1.2e1	1.1e1
N-Nitroso-di-n-propylamine	621-64-7	3.5e0	<	N	3.6e0	<	N	4.8e0	<	N	3.4e0	<	N	4.8e0	<	5.2e0		4.8e0		N	4.2e0	3.5e0
N-Nitrosodimethylamine	62-75-9	3.5e0	<	N	3.6e0	<	N	4.8e0	<,J	P	3.4e0	<	N	4.8e0	<,J	5.2e0		4.8e0		P	4.2e0	3.5e0
N-Nitrosodiphenylamine	86-30-6	4.8e0	<	N	4.9e0	<	N	6.8e0	<,J	P	4.6e0	<	N	6.8e0	<,J	7.3e0		6.8e0		P	5.8e0	4.8e0
Naphthalene	91-20-3	3.5e0	<	N	3.6e0	<	N	5.5e0	<,J	P	3.4e0	<	N	5.5e0	<,J	6.0e0		5.5e0		P	4.5e0	3.5e0
2-Nitroaniline	88-74-4	3.5e0	<	N	3.6e0	<	N	5.5e0	<	N	3.4e0	<	N	5.5e0	<	6.0e0		5.5e0		N	4.5e0	3.5e0
3-Nitroaniline	99-09-2	1.3e1	<	N	1.3e1	<	N	1.6e1	<	N	1.3e1	<	N	1.6e1	<	1.7e1		1.6e1		N	1.5e1	1.3e1
4-Nitroaniline	100-01-6	1.2e1	<	N	1.2e1	<	N	1.4e1	<	N	1.1e1	<	N	1.4e1	<	1.5e1		1.4e1		N	1.3e1	1.1e1
Nitrobenzene	98-95-1	5.1e0	<,J	P	4.9e0	<,J	P	6.5e0	<,J	P	3.7e0	<,J	P	6.5e0	<,J	7.3e0		6.5e0		P	5.8e0	4.3e0
2-Nitrophenol	88-75-5	2.9e1	<	P	1.3e1	<,J	P	1.2e1	<,J	P	1.6e1	<,J	P	2.9e1	<	3.3e1		2.9e1		P	2.1e1	1.5e1
4-Nitrophenol	100-02-7	2.4e1	<,J	P	1.8e1	<	N	2.0e1	<	N	1.7e1	<,J	P	2.4e1	<,J	2.6e1		2.4e1		P	2.2e1	1.7e1
2,2'-Oxybis(1-chloropropane)	108-60-1	4.5e0	<	N	4.6e0	<	N	7.1e0	<,J	P	4.3e0	<	N	7.1e0	<,J	7.8e0		7.1e0		P	5.8e0	4.4e0
Pentachlorobenzene	608-93-5	3.2e0	<	N	3.3e0	<	N	4.8e0	<	N	3.1e0	<	N	4.8e0	<	5.3e0		4.8e0		N	4.0e0	3.2e0
Pentachloronitrobenzene	82-68-8	3.5e0	<	N	3.6e0	<	N	5.2e0	<	N	3.4e0	<	N	5.2e0	<	5.6e0		5.2e0		N	4.3e0	3.5e0
Pentachlorophenol	87-86-5	9.6e1	<	N	9.8e1	<	N	1.0e2	<	N	1.1e2	<	N	1.1e2	<	1.2e2		1.1e2		N	9.8e1	1.1e2
Phenanthrene	85-01-8	3.1e0	<	N	3.2e0	<	N	5.5e0	<,J	P	3.0e0	<	N	5.5e0	<,J	6.1e0		5.5e0		P	4.3e0	3.1e0
Phenol	108-95-2	2.5e1	<	P	1.2e1	<,J	P	1.1e1	<,J	P	1.2e1	<,J	P	2.5e1	<	2.8e1		2.5e1		P	1.8e1	1.2e1
Pyrene	129-00-0	3.2e0	<	N	3.3e0	<	N	5.8e0	<,J	P	3.1e0	<	N	5.8e0	<,J	6.5e0		5.8e0		P	4.5e0	3.2e0
Pyridine	110-86-1	5.4e0	<	N	5.6e0	<	N	9.0e0	<	N	5.2e0	<	N	9.0e0	<	1.0e1		9.0e0		N	7.2e0	5.4e0
1,2,4,5-Tetrachlorobenzene	95-94-3	3.5e0	<	N	3.6e0	<	N	5.2e0	<	N	3.4e0	<	N	5.2e0	<	5.6e0		5.2e0		N	4.3e0	3.5e0
1,2,4-Trichlorobenzene	120-82-1	3.8e0	<	N	3.9e0	<	N	5.5e0	<,J	P	3.7e0	<	N	5.5e0	<,J	5.9e0		5.5e0		P	4.7e0	3.8e0
2,4,5-Trichlorophenol	95-95-4	8.0e0	<	N	8.2e0	<	N	9.4e0	<	N	7.7e0	<	N	9.4e0	<	9.8e0		9.4e0		N	8.7e0	7.9e0
2,4,6-Trichlorophenol	88-06-2	5.1e0	<	N	5.2e0	<	N	6.8e0	<	N	4.9e0	<	N	6.8e0	<	7.2e0		6.8e0		N	5.9e0	5.1e0

Table C-1. VOC target analyte list reported by the INTEC ALD.

CAS #	Compound	CAS #	Compound
74-87-3	Chloromethane	79-01-6	Trichloroethene
75-01-04	Vinyl Chloride	78-87-5	1,2-Dichloropropane
74-83-9	Bromomethane	75-27-4	Bromodichloromethane
75-00-3	Chloroethane	10061-01-5	Cis-1,3-dichloropropene
75-69-4	Trichlorofluoromethane	108-10-1	4-Methyl-2-pentanone
75-35-4	1,1-Dichloroethene	108-88-3	Toluene
76-13-1	1,1,2-Trichloro-1,2,2-trifluoroethane	10061-02-6	Trans-1,3-dichloropropene
75-15-0	Carbon disulfide	79-00-5	1,1,2-Trichloroethane
67-64-1	Acetone	127-18-4	Tetrachloroethene
75-09-2	Methylene chloride (Dichloromethane)	591-78-6	2-Hexanone
156-60-5	Trans-1,2-dichloroethene	124-48-1	Dibromochloromethane
75-34-3	1,1-Dichloroethane	108-90-7	Chlorobenzene
156-59-2	Cis-1,2-dichloroethene	100-41-4	Ethylbenzene
78-93-3	2-Butanone	108-38-3	M-xylene and 106-42-3 p-xylene
67-66-3	Chloroform	95-47-6	O-xylene
71-55-6	1,1,1-Trichloroethane	100-42-5	Styrene
56-23-5	Carbon tetrachloride	75-25-2	Bromoform
71-43-2	Benzene	79-34-5	1,1,2,2-Tetrachloroethane
107-06-2	1,2-Dichloroethane		

Table B-23. 0031 concentration-basis.

Analyte	CAS Registry Number	STRT-1 µg/dscm	Flag	Project Specific Flag	END-1 µg/dscm	Flag	Project Specific Flag	STRT-2 µg/dscm	Flag	Project Specific Flag	END-2 µg/dscm	Flag	Project Specific Flag	Max value µg/dscm	Flag	Avg+2σ µg/dscm	Flag	Results µg/dscm	Flag	Project Specific Flag	STRT Run Avgs µg/dscm	END Run Avgs µg/dscm
Acetone	67-64-1	8.9e1	B	A	9.2e1	B	A	6.3e1	J,B	A	4.8e1	<,J,B	A	6.3e1	J,B	1.2e2		6.3e1	J,B	A	6.3e1	4.8e1
Acrylonitrile	107-13-1	3.5e1	<	N	3.6e1	<	N	3.5e1	<	N	3.6e1	<	N	3.6e1	<	3.6e1		3.6e1	<	N	3.5e1	3.6e1
Benzene	71-43-2	4.9e0	<	P	3.1e0	<	P	2.8e0	<,J	P	2.6e0	<	P	4.9e0	<	5.5e0		4.9e0	<	P	3.9e0	2.8e0
Bromobenzene	108-86-1	1.5e0	<	N	1.5e0	<	N	1.5e0	<	N	1.5e0	<	N	1.5e0	<	1.6e0		1.5e0	<	N	1.5e0	1.5e0
Bromochloromethane	74-97-5	1.9e0	<	N	1.9e0	<	N	1.9e0	<	N	1.9e0	<	N	1.9e0	<	1.9e0		1.9e0	<	N	1.9e0	1.9e0
Bromodichloromethane	75-27-4	1.5e0	<	N	1.5e0	<	N	1.5e0	<	N	1.5e0	<	N	1.5e0	<	1.6e0		1.5e0	<	N	1.5e0	1.5e0
Bromoform	75-25-2	2.2e0	<	N	2.3e0	<	N	2.3e0	<	N	2.3e0	<	N	2.3e0	<	2.3e0		2.3e0	<	N	2.2e0	2.3e0
Bromomethane	74-83-9	2.1e0	<,J	P	2.9e0	<,J	P	1.9e0	<,J	P	2.6e0	J	P	2.9e0	<,J	3.3e0		2.9e0	<,J	P	2.0e0	2.7e0
2-Butanone	78-93-3	1.1e1	<,J	P	1.1e1	<,J	P	1.1e1	<,J	P	1.1e1	<	N	1.1e1	<,J	1.2e1		1.1e1	<,J	P	1.1e1	1.1e1
n-Butylbenzene	104-51-8	1.9e0	<	N	1.9e0	<	N	1.9e0	<	N	1.9e0	<	N	1.9e0	<	1.9e0		1.9e0	<	N	1.9e0	1.9e0
sec-Butylbenzene	135-98-8	1.1e0	<	N	1.1e0	<	N	1.1e0	<	N	1.1e0	<	N	1.1e0	<	1.1e0		1.1e0	<	N	1.1e0	1.1e0
tert-Butylbenzene	98-06-6	1.7e0	<	N	1.8e0	<	N	1.8e0	<	N	1.8e0	<	N	1.8e0	<	1.8e0		1.8e0	<	N	1.7e0	1.8e0
Carbon disulfide	75-15-0	1.2e1	<	P	1.5e1	<	P	1.6e1	<	P	8.2e0	<	P	1.6e1	<	2.0e1		1.6e1	<	P	1.4e1	1.2e1
Carbon tetrachloride	56-23-5	2.0e0	<	N	2.0e0	<	N	2.0e0	<	N	2.0e0	<,J	P	2.0e0	<	2.1e0		2.0e0	<	P	2.0e0	2.0e0
Chlorobenzene	108-90-7	1.2e0	<	N	1.2e0	<,J	P	1.2e0	<	N	1.2e0	<,J	P	1.2e0	<,J	1.2e0		1.2e0	<,J	P	1.2e0	1.2e0
Chlorodibromomethane	124-48-1	1.9e0	<	N	1.9e0	<	N	1.9e0	<	N	1.9e0	<	N	1.9e0	<	1.9e0		1.9e0	<	N	1.9e0	1.9e0
Chloroethane	75-00-3	2.0e0	<,J	P	2.6e0	<,J	P	2.1e0	<,J	P	2.0e0	<,J	P	2.6e0	<,J	2.7e0		2.6e0	<,J	P	2.1e0	2.3e0
Chloroform	67-66-3	3.0e0	<,J	P	5.1e0	<	P	4.1e0	<	P	5.0e0	<	P	5.1e0	<	6.3e0		5.1e0	<	P	3.6e0	5.0e0
Chloromethane	74-87-3	1.5e1	J	P	3.7e1	<	P	1.5e1	<,J	P	3.2e1	<,J	P	3.7e1	<	4.8e1		3.7e1	<	P	1.5e1	3.4e1
2-Chlorotoluene	95-49-8	7.3e-1	<	N	7.5e-1	<	N	7.4e-1	<	N	7.5e-1	<	N	7.5e-1	<	7.7e-1		7.5e-1	<	N	7.3e-1	7.5e-1
4-Chlorotoluene	106-43-4	7.3e-1	<	N	7.5e-1	<	N	7.4e-1	<	N	7.5e-1	<	N	7.5e-1	<	7.7e-1		7.5e-1	<	N	7.3e-1	7.5e-1
1,2-Dibromo-3-chloropropane	96-12-8	3.3e0	<	N	3.6e0	<	N	3.5e0	<	N	3.4e0	<	N	3.6e0	<	3.7e0		3.6e0	<	N	3.4e0	3.5e0
1,2-Dibromoethane	106-93-4	2.5e0	<	N	2.6e0	<	N	2.5e0	<	N	2.6e0	<	N	2.6e0	<	2.6e0		2.6e0	<	N	2.5e0	2.6e0
Dibromomethane	74-95-3	2.1e0	<	N	2.2e0	<	N	2.1e0	<	N	2.2e0	<	N	2.2e0	<	2.2e0		2.2e0	<	N	2.1e0	2.2e0
1,2-Dichlorobenzene	95-50-1	2.2e0	<	N	2.3e0	<	N	2.3e0	<	N	2.3e0	<	N	2.3e0	<	2.3e0		2.3e0	<	N	2.2e0	2.3e0
1,3-Dichlorobenzene	541-73-1	1.2e0	<	N	1.3e0	<	N	1.3e0	<	N	1.3e0	<	N	1.3e0	<	1.3e0		1.3e0	<	N	1.2e0	1.3e0
1,4-Dichlorobenzene	106-46-7	1.7e0	<	N	1.8e0	<	N	1.8e0	<	N	1.8e0	<	N	1.8e0	<	1.8e0		1.8e0	<	N	1.7e0	1.8e0
Dichlorodifluoromethane	75-71-8	3.2e0	<	P	2.0e0	<,J	P	2.5e0	<	P	2.0e0	<,J	P	3.2e0	<	3.6e0		3.2e0	<	P	2.9e0	2.0e0
1,1-Dichloroethane	75-34-3	1.9e0	<	N	1.9e0	<	N	1.9e0	<	N	1.9e0	<	N	1.9e0	<	1.9e0		1.9e0	<	N	1.9e0	1.9e0
1,2-Dichloroethane	107-06-2	2.0e0	<,J	P	2.0e0	<,J	P	2.0e0	<	N	2.0e0	<	N	2.0e0	<,J	2.1e0		2.0e0	<,J	P	2.0e0	2.0e0
1,1-Dichloroethene	75-35-4	2.0e0	<,J	P	2.3e0	<,J	P	2.0e0	<,J	P	2.0e0	<,J	P	2.3e0	<,J	2.4e0		2.3e0	<,J	P	2.0e0	2.2e0
cis-1,2-Dichloroethene	156-59-2	1.9e0	<	N	1.9e0	<	N	1.9e0	<	N	1.9e0	<	N	1.9e0	<	1.9e0		1.9e0	<	N	1.9e0	1.9e0
trans-1,2-Dichloroethene	156-60-5	2.1e0	<	N	2.0e0	<	N	2.0e0	<	N	2.2e0	<	N	2.2e0	<	2.2e0		2.2e0	<	N	2.1e0	2.1e0
1,2-Dichloropropane	78-87-5	1.6e0	<	N	1.7e0	<,J	P	1.6e0	<	N	1.7e0	<	N	1.7e0	<,J	1.7e0		1.7e0	<,J	P	1.6e0	1.7e0
1,3-Dichloropropane	142-28-9	2.1e0	<	N	2.2e0	<	N	2.1e0	<	N	2.2e0	<	N	2.2e0	<	2.2e0		2.2e0	<	N	2.1e0	2.2e0
2,2-Dichloropropane	594-20-7	2.0e0	<	N	2.0e0	<	N	2.0e0	<	N	2.0e0	<	N	2.0e0	<	2.1e0		2.0e0	<	N	2.0e0	2.0e0
1,1-Dichloropropene	563-58-6	2.2e0	<	N	2.3e0	<	N	2.3e0	<	N	2.3e0	<	N	2.3e0	<	2.3e0		2.3e0	<	N	2.2e0	2.3e0
cis-1,3-Dichloropropene	10061-01-5	1.6e0	<	N	1.7e0	<	N	1.6e0	<	N	1.7e0	<	N	1.7e0	<	1.7e0		1.7e0	<	N	1.6e0	1.7e0
trans-1,3-Dichloropropene	10061-02-6	1.9e0	<	N	1.9e0	<	N	1.9e0	<	N	1.9e0	<	N	1.9e0	<	1.9e0		1.9e0	<	N	1.9e0	1.9e0
Ethylbenzene	100-41-4	1.2e0	<	N	1.2e0	<	N	1.2e0	<	N	1.2e0	<	N	1.2e0	<	1.2e0		1.2e0	<	N	1.2e0	1.2e0
Hexachlorobutadiene	87-68-3	2.7e0	<	N	2.8e0	<	N	2.8e0	<	N	2.9e0	<	N	2.9e0	<	3.0e0		2.9e0	<	N	2.7e0	2.9e0
2-Hexanone	591-78-6	6.9e0	<	N	7.1e0	<	N	7.0e0	<	N	7.1e0	<	N	7.1e0	<	7.3e0		7.1e0	<	N	7.0e0	7.1e0
Isopropylbenzene	98-82-8	8.7e-1	<	N	8.9e-1	<	N	8.8e-1	<	N	8.9e-1	<	N	8.9e-1	<	9.1e-1		8.9e-1	<	N	8.7e-1	8.9e-1
p-Isopropyltoluene	99-87-6	1.4e0	<	N	1.4e0	<	N	1.4e0	<	N	1.4e0	<	N	1.4e0	<	1.4e0		1.4e0	<	N	1.4e0	1.4e0
Methylene chloride	75-09-2	2.2e2	E,B	A	2.2e1	B	A	1.4e1	<,B	A	5.5e0	<,J,B	A	1.4e1	<,B	2.8e2		1.4e1	<,B	A	1.4e1	5.5e0
4-Methyl-2-pentanone	108-10-1	7.3e0	<	N	7.5e0	<	N	7.4e0	<	N	7.5e0	<	N	7.5e0	<	7.7e0		7.5e0	<	N	7.3e0	7.5e0
Naphthalene	91-20-3	2.6e0	<	N	2.7e0	<	N	2.6e0	<	N	2.7e0	<	N	2.7e0	<	2.7e0		2.7e0	<	N	2.6e0	2.7e0
n-Propylbenzene	103-65-1	8.3e-1	<	N	8.4e-1	<	N	8.3e-1	<	N	8.4e-1	<	N	8.4e-1	<	8.5e-1		8.4e-1	<	N	8.3e-1	8.4e-1
Styrene	100-42-5	9.7e-1	<	N	1.0e0	<	N	9.8e-1	<	N	9.9e-1	<	N	1.0e0	<	1.0e0		1.0e0	<	N	9.7e-1	1.0e0
1,1,1,2-Tetrachloroethane	630-20-6	1.2e0	<	N	1.3e0	<	N	1.3e0	<	N	1.3e0	<	N	1.3e0	<	1.3e0		1.3e0	<	N	1.2e0	1.3e0
1,1,2,2-Tetrachloroethane	79-34-5	2.7e0	<	N	2.8e0	<	N	2.8e0	<	N	2.9e0	<	N	2.9e0	<	3.0e0		2.9e0	<	N	2.7e0	2.9e0
Tetrachloroethene	127-18-4	1.9e0	<	N	1.9e0	<	N	1.9e0	<	N	1.9e0	<	N	1.9e0	<	1.9e0		1.9e0	<	N	1.9e0	1.9e0
Toluene	108-88-3	2.4e0	<,J	P	3.6e0	<,J	P	3.8e0	<,J	P	2.3e0	<,J	P	3.8e0	<,J	4.6e0		3.8e0	<,J	P	3.1e0	2.9e0
1,2,3-Trichlorobenzene	87-61-6	2.6e0	<	N	2.7e0	<	N	2.6e0	<	N	2.7e0	<	N	2.7e0	<	2.7e0		2.7e0	<	N	2.6e0	2.7e0
1,2,4-Trichlorobenzene	120-82-1	2.7e0	<	N	2.8e0	<	N	2.8e0	<	N	2.9e0	<	N	2.9e0	<	3.0e0		2.9e0	<	N	2.7e0	2.9e0
1,1,1-Trichloroethane	71-55-6	2.4e0	<	N	2.4e0	<	N	2.4e0	<	N	2.4e0	<	N	2.4e0	<	2.5e0		2.4e0	<	N	2.4e0	2.4e0
1,1,2-Trichloroethane	79-00-5	2.1e0	<	N	2.2e0	<	N	2.1e0	<	N	2.2e0	<	N	2.2e0	<	2.2e0		2.2e0	<	N	2.1e0	2.2e0
Trichloroethene	79-01-6	2.0e0	<	N	2.0e0	<	N	2.0e0	<	N	2.0e0	<	N	2.0e0	<	2.1e0		2.0e0	<	N	2.0e0	2.0e0
Trichlorofluoromethane	75-69-4	2.0e0	<,J	P	2.0e0	<,J	P	2.0e0	<,J	P	2.0e0	<,J	P	2.0e0	<,J	2.1e0		2.0e0	<,J	P	2.0e0	2.0e0
1,2,3-Trichloropropane	96-18-4	3.0e0	<	N	3.1e0	<	N	3.0e0	<	N	3.1e0	<	N	3.1e0	<	3.1e0		3.1e0	<	N	3.0e0	3.1e0
1,2,4-Trimethylbenzene	95-63-6	1.2e0	<	N	1.3e0	<	N	1.3e0	<	N	1.3e0	<	N	1.3e0	<	1.3e0		1.3e0	<	N	1.2e0	1.3e0
1,3,5-Trimethylbenzene	108-67-8	7.3e-1	<	N	7.5e-1	<	N	7.4e-1	<	N	7.5e-1	<	N	7.5e-1	<	7.7e-1		7.5e-1	<	N	7.3e-1	7.5e-1
Vinyl chloride	75-01-4	1.6e0	<,J	P	2.3e0	<,J	P	1.6e0	<,J	P	2.2e0	<,J	P	2.3e0	<,J	2.6e0		2.3e0	<,J	P	1.6e0	2.2e0
m-Xylene & p-Xylene	136777-61-2	5.4e0	<	N	5.6e0	<	N	5.5e0	<	N	5.6e0	<	N	5.6e0	<	5.7e0		5.6e0	<	N	5.5e0	5.6e0
o-Xylene	95-47-6	9.5e-1	<	N	1.0e0	<,J	P	9.8e-1	<	N	9.8e-1	<,J	P	1.0e0	<,J	1.0e0		1.0e0	<,J	P	9.6e-1	9.9e-1

Table B-23. 0031 concentration-basis.

TICs	CAS Registry Number	STRT-1 µg/dscm	Flag	Project Specific Flag	END-1 µg/dscm	Flag	Project Specific Flag	STRT-2 µg/dscm	Flag	Project Specific Flag	END-2 µg/dscm	Flag	Project Specific Flag	Max value µg/dscm	Flag	Avg+2σ µg/dscm	Flag	Results µg/dscm	Flag	Project Specific Flag	STRT Run Avgs µg/dscm	END Run Avgs µg/dscm
1-Heptene	592-76-7	6.7e-1	N,J,M	P										6.7e-1	N,J,M			6.7e-1	N,J,M	P	6.7e-1	
Benzonitrile	100-47-0				2.4e0	N,J,M	P	9.0e-1	N,J,M	P	6.0e-1	N,J,M	P	2.4e0	N,J,M	3.3e0		2.4e0	N,J,M	P	9.0e-1	1.5e0
Butane, 1-chloro-	109-69-3	7.1e-1	N,J,M	P										7.1e-1	N,J,M			7.1e-1	N,J,M	P	7.1e-1	
Cyclobutane, ethenyl-	2597-49-1				1.5e0	N,J,M	P							1.5e0	N,J,M			1.5e0	N,J,M	P		1.5e0
Cyclohexane, hexyl-	4292-75-5	7.3e-1	N,J,M	P										7.3e-1	N,J,M			7.3e-1	N,J,M	P	7.3e-1	
Cyclohexane, methyl-	108-87-2	1.4e0	N,J,M	P	2.6e0	N,J,M	P	2.5e0	N,J,M	P	1.5e0	N,J,M	P	2.6e0	N,J,M	3.2e0		2.6e0	N,J,M	P	1.9e0	2.0e0
Cyclohexene	110-83-8	1.2e0	N,J,M	P	4.6e-1	N,J,M	P	2.3e0	N,J,M	P	3.3e-1	N,J,M	P	2.3e0	N,J,M	2.8e0		2.3e0	N,J,M	P	1.7e0	4.0e-1
Cyclopentane, 1,2-dimethyl-	2452-99-5							6.6e-1	N,J,M	P				6.6e-1	N,J,M	9.9e-1		6.6e-1	N,J,M	P	3.3e-1	
Cyclopentane, 1,2-dimethyl-, t	822-50-4				1.0e0	N,J,M	P				3.8e-1	N,J,M	P	1.0e0	N,J,M	1.6e0		1.0e0	N,J,M	P		7.0e-1
Cyclopentane, ethyl-	1640-89-7	3.5e-1	N,J,M	P	5.2e-1	N,J,M	P	4.5e-1	N,J,M	P				5.2e-1	N,J,M	7.9e-1		5.2e-1	N,J,M	P	4.0e-1	2.6e-1
Decane	124-18-5	1.5e0	N,J,M	P										1.5e0	N,J,M			1.5e0	N,J,M	P	1.5e0	
Decane, 2,2,5-trimethyl-	62237-96-1							7.5e-1	N,J,M	P				7.5e-1	N,J,M			7.5e-1	N,J,M	P	7.5e-1	
Decane, 2,9-dimethyl-	1002-17-1	7.9e-1	N,J,M	P										7.9e-1	N,J,M			7.9e-1	N,J,M	P	7.9e-1	
Dodecane	112-40-3	3.8e2	N,J,M	P	3.3e2	N,J,M	P	2.8e2	N,J,M	P	2.2e2	N,J,M	P	3.8e2	N,J,M	4.5e2		3.8e2	N,J,M	P	3.3e2	2.7e2
Dodecane, 6-methyl-	6044-71-9							6.5e-1	N,J,M	P				6.5e-1	N,J,M			6.5e-1	N,J,M	P	6.5e-1	
Hexadecane	544-76-3				2.7e0	N,J,M	P							2.7e0	N,J,M			2.7e0	N,J,M	P		2.7e0
Hexane, 2,4-dimethyl-	589-43-5	1.4e0	N,J,M	P	2.3e0	N,J,M	P	2.5e0	N,J,M	P	1.2e0	N,J,M	P	2.5e0	N,J,M	3.2e0		2.5e0	N,J,M	P	1.9e0	1.7e0
Hexane, 2-methyl-	591-76-4	2.1e0	N,J,M	P	4.0e0	N,J,M	P	3.8e0	N,J,M	P	3.1e0	N,J,M	P	4.0e0	N,J,M	4.9e0		4.0e0	N,J,M	P	2.9e0	3.5e0
Hexane, 3-methyl-	589-34-4	4.7e0	N,J,M	P	9.7e0	N,J,M	P	3.4e0	N,J,M	P	4.3e0	N,J,M	P	9.7e0	N,J,M	1.1e1		9.7e0	N,J,M	P	4.0e0	7.0e0
Methane, trichloronitro-	76-06-2				4.6e0	N,J,M	P							4.6e0	N,J,M			4.6e0	N,J,M	P		4.6e0
Octane	111-65-9	3.3e-1	N,J,M	P										3.3e-1	N,J,M			3.3e-1	N,J,M	P	3.3e-1	
Pentane, 2,3-dimethyl-	565-59-3	2.2e0	N,J,M	P	4.0e-1	N,J,M	P	1.4e0	N,J,M	P	1.8e0	N,J,M	P	2.2e0	N,J,M	3.0e0		2.2e0	N,J,M	P	1.8e0	1.1e0
Pentane, 3,3-dimethyl-	562-49-2				7.5e-1	N,J,M	P							7.5e-1	N,J,M	9.4e-1		7.5e-1	N,J,M	P		3.8e-1
Pentane, 3-ethyl-	617-78-7							4.3e-1	N,J,M	P	4.1e-1	N,J,M	P	4.3e-1	N,J,M	6.9e-1		4.3e-1	N,J,M	P	2.1e-1	2.0e-1
Tetradecane	629-59-4	1.4e0	N,J,M	P	1.3e1	N,J,M	P	1.2e1	N,J,M	P	1.8e1	N,J,M	P	1.8e1	N,J,M	2.5e1		1.8e1	N,J,M	P	6.8e0	1.5e1
Tridecane	629-50-5	3.5e1	N,J,M	P	4.0e1	N,J,M	P	1.0e0	N,J,M	P	4.0e1	N,J,M	P	4.0e1	N,J,M	6.6e1		4.0e1	N,J,M	P	1.8e1	4.0e1
Undecane	1120-21-4	1.2e1	N,J,M	P	6.4e0	N,J,M	P	3.0e0	N,J,M	P	1.5e0	N,J,M	P	1.2e1	N,J,M	1.5e1		1.2e1	N,J,M	P	7.7e0	4.0e0
Undecane, 2,6-dimethyl-	17301-23-4	1.4e0	N,J,M	P				5.8e-1	N,J,M	P	1.1e0	N,J,M	P	1.4e0	N,J,M	1.8e0		1.4e0	N,J,M	P	9.7e-1	1.1e0
Undecane, 5-methyl-	1632-70-8	7.9e0	N,J,M	P	2.3e0	N,J,M	P	2.6e0	N,J,M	P	2.3e0	N,J,M	P	7.9e0	N,J,M	9.3e0		7.9e0	N,J,M	P	5.3e0	2.3e0

Table B-24. 0050 concentration-basis.

Analyte	STRT-1 ppmv, dry	Flag	END-1 ppmv, dry	Flag	STRT-2 ppmv, dry	Flag	END-2 ppmv, dry	Flag	Max value ppmv, dry	Flag	Avg+2σ ppmv, dry	Flag	Results ppmv, dry	Flag	STRT Run Avgs ppmv, dry	END Run Avgs ppmv, dry
Chloride (as HCl)	6.1e-1	B	5.7e-1	B	6.4e-1	B	6.2e-1	B	6.4e-1	B	6.7e-1		6.4e-1	B	6.3e-1	6.0e-1
Chloride (as Cl2)	3.1e-2	<	5.7e-2	B	3.2e-2	<	3.2e-2	<	5.7e-2	B	6.4e-2		5.7e-2	B	3.2e-2	4.5e-2
Particulate	mg/dscm		mg/dscm		mg/dscm		mg/dscm		mg/dscm		mg/dscm		mg/dscm		mg/dscm	mg/dscm
	1.1e0	B	8.6e-1	B	3.7e-1		2.6e-1	B	1.1e0	B	1.5e0		1.1e0	B	7.4e-1	5.6e-1

Table B-25. 0060 concentration-basis.

Analyte	CAS Registry Number	STRT-1 µg/dscm	Flag	Project Specific Flags	END-1 µg/dscm	Flag	Project Specific Flags	STRT-2 µg/dscm	Flag	Project Specific Flags	END-2 µg/dscm	Flag	Project Specific Flags	Max value µg/dscm	Flag	Avg+2σ µg/dscm	Flag	Results µg/dscm	Flag	Project Specific Flag	STRT Run Avgs µg/dscm	END Run Avgs µg/dscm
Aluminum (Al)	7429-90-5	4.6e1		A	7.4e1		A	2.3e1		A	2.4e1		A	7.4e1		9.0e1		7.4e1		A	3.4e1	4.9e1
Antimony (Sb)	7440-36-0	1.5e0	B	A	1.4e0	B	A	1.4e0	B	A	1.3e0	B	A	1.5e0	B	1.5e0		1.5e0		A	1.4e0	1.4e0
Arsenic (As)	7440-38-2	5.2e-1	<,B	P	4.4e-1	<	N	4.9e-1	<	N	5.2e-1	<	N	5.2e-1	<,B	5.7e-1		5.2e-1		P	5.1e-1	4.8e-1
Barium (Ba)	7440-39-3	2.2e0	B	A	2.7e0	B	A	1.6e0	B	A	1.5e0	B	A	2.7e0	B	3.2e0		2.7e0		A	1.9e0	2.1e0
Beryllium (Be)	7440-41-7	2.1e-1	<,B	P	1.8e-1	<,B	P	2.0e-1	<,B	P	2.1e-1	<,B	P	2.1e-1	<,B	2.3e-1		2.1e-1		P	2.1e-1	2.0e-1
Cadmium (Cd)	7440-43-9	1.5e-1	B	A	2.2e-1	B	A	8.2e-2	<,B	P	8.8e-2	<	N	2.2e-1	B	2.7e-1		2.2e-1		P	1.2e-1	1.6e-1
Chromium (Cr)	7440-47-3	9.8e-1		A	1.3e0		A	7.6e-1		A	1.7e0		A	1.7e0		2.0e0		1.7e0		A	8.7e-1	1.5e0
Cobalt (Co)	7440-48-4	8.8e-1	B	A	7.4e-1	<	N	8.2e-1	<	N	8.8e-1	<	N	8.8e-1	B	9.7e-1		8.8e-1		P	8.5e-1	8.1e-1
Copper (Cu)	7440-50-8	1.4e0	B	A	9.9e-1	B	A	7.0e-1	B	A	4.6e-1	<,B	P	1.4e0	B	1.7e0		1.4e0		P	1.1e0	7.2e-1
Lead (Pb)	7439-92-1	4.3e-1	<,B	P	3.6e-1	B	A	4.3e-1	<,B	P	3.9e-1	<,B	P	4.3e-1	<,B	4.7e-1		4.3e-1		P	4.3e-1	3.7e-1
Manganese (Mn)	7439-96-5	6.2e0		A	6.3e0		A	1.2e1		A	2.4e1		A	2.4e1		2.8e1		2.4e1		A	8.9e0	1.5e1
Mercury (Hg)	7439-97-6	3.3e1		A	4.1e1		P	3.4e1		P	3.6e1		P	4.1e1		4.3e1		4.1e1		P	3.3e1	3.9e1
Nickel (Ni)	7440-02-0	1.6e0	B	A	1.6e0	B	A	1.4e0	B	A	1.3e0	B	A	1.6e0	B	1.8e0		1.6e0		A	1.5e0	1.5e0
Selenium (Se)	7782-49-2	1.0e0	B	A	5.7e-1	<	P	7.9e-1	B	A	7.5e-1	B	A	1.0e0	B	1.2e0		1.0e0		P	9.2e-1	6.6e-1
Silver (Ag)	7440-22-4	8.5e-1	<	N	7.1e-1	<	N	7.9e-1	<	N	8.5e-1	<	N	8.5e-1	<	9.3e-1		8.5e-1		N	8.2e-1	7.8e-1
Thallium (Tl)	7440-28-0	8.2e-1	<	N	6.6e-1	<	N	7.6e-1	<	N	7.8e-1	<	N	8.2e-1	<	8.9e-1		8.2e-1		N	7.9e-1	7.2e-1
Vanadium (V)	7440-62-2	8.8e-1	<	N	7.4e-1	<	N	8.2e-1	<	N	8.8e-1	<	N	8.8e-1	<	9.7e-1		8.8e-1		N	8.5e-1	8.1e-1
Zinc (Zn)	7440-66-6	2.0e1		A	3.3e1		A	9.1e0		A	5.6e0		A	3.3e1		4.1e1		3.3e1		A	1.5e1	1.9e1
Total Metals																		1.9e2				
Total Detected Metals																		1.8e2				

Table B-26. 0060 blank corrected concentration-basis.

Analyte	CAS Registry Number	STRT-1 µg/dscm	Flag	Project Specific Flags	END-1 µg/dscm	Flag	Project Specific Flags	STRT-2 µg/dscm	Flag	Project Specific Flags	END-2 µg/dscm	Flag	Project Specific Flags	Max value µg/dscm	Flag	Avg+2σ µg/dscm	Flag	Results µg/dscm	Flag	Project Specific Flag	STRT Run Avgs µg/dscm	END Run Avgs µg/dscm
Aluminum (Al)	7429-90-5	4.2e1		A	7.0e1		A	2.1e1		A	2.2e1		A	7.0e1		8.5e1		7.0e1		A	3.2e1	4.6e1
Antimony (Sb)	7440-36-0	3.4e-1	B	A	4.2e-1	B	A	2.9e-1	B	A	1.8e-1	B	A	4.2e-1	B	5.1e-1		4.2e-1		A	3.1e-1	3.0e-1
Arsenic (As)	7440-38-2	2.8e-1	<,B	P	2.4e-1	<	N	2.6e-1	<	N	2.8e-1	<	N	2.8e-1	<,B	3.1e-1		2.8e-1		P	2.7e-1	2.6e-1
Barium (Ba)	7440-39-3	7.0e-1	B	A	1.5e0	B	A	1.6e-1	B	A	4.6e-2	B	A	1.5e0	B	1.9e0		1.5e0		A	4.3e-1	7.8e-1
Beryllium (Be)	7440-41-7	1.5e-1	<,B	P	1.2e-1	<,B	P	1.4e-1	<,B	P	1.5e-1	<,B	P	1.5e-1	<,B	1.6e-1		1.5e-1		P	1.4e-1	1.4e-1
Cadmium (Cd)	7440-43-9	1.3e-1	B	A	2.1e-1	B	A	6.4e-2	<,B	P	6.9e-2	<	N	2.1e-1	B	2.5e-1		2.1e-1		P	9.8e-2	1.4e-1
Chromium (Cr)	7440-47-3	3.8e-1		A	7.9e-1		A	2.0e-1		A	1.1e0		A	1.1e0		1.4e0		1.1e0		A	2.9e-1	9.3e-1
Cobalt (Co)	7440-48-4	8.8e-1	B	A	7.4e-1	<	N	8.2e-1	<	N	8.8e-1	<	N	8.8e-1	B	9.7e-1		8.8e-1		P	8.5e-1	8.1e-1
Copper (Cu)	7440-50-8	1.4e0	B	A	9.9e-1	B	A	6.9e-1	B	A	4.5e-1	<,B	P	1.4e0	B	1.7e0		1.4e0		P	1.1e0	7.2e-1
Lead (Pb)	7439-92-1	2.8e-1	<,B	P	2.4e-1	B	A	3.0e-1	<,B	P	2.5e-1	<,B	P	3.0e-1	<,B	3.2e-1		3.0e-1		P	2.9e-1	2.4e-1
Manganese (Mn)	7439-96-5	5.7e0		A	6.0e0		A	1.1e1		A	2.3e1		A	2.3e1		2.7e1		2.3e1		A	8.4e0	1.4e1
Mercury (Hg)	7439-97-6	3.3e1		A	4.1e1		P	3.4e1		P	3.6e1		P	4.1e1		4.3e1		4.1e1		P	3.3e1	3.9e1
Nickel (Ni)	7440-02-0	5.0e-1	B	A	7.0e-1	B	A	3.2e-1	B	A	2.1e-1	B	A	7.0e-1	B	8.6e-1		7.0e-1		A	4.1e-1	4.5e-1
Selenium (Se)	7782-49-2	3.3e-11	B	A	2.7e-11	<	P	3.0e-11	B	A	3.3e-11	B	A	3.3e-11	B	3.6e-11		3.3e-11		P	3.2e-11	3.0e-11
Silver (Ag)	7440-22-4	8.5e-1	<	N	7.1e-1	<	N	8.0e-1	<	N	8.5e-1	<	N	8.5e-1	<	9.4e-1		8.5e-1		N	8.2e-1	7.8e-1
Thallium (Tl)	7440-28-0	8.2e-1	<	N	6.6e-1	<	N	7.6e-1	<	N	7.8e-1	<	N	8.2e-1	<	8.9e-1		8.2e-1		N	7.9e-1	7.2e-1
Vanadium (V)	7440-62-2	8.8e-1	<	N	7.4e-1	<	N	8.2e-1	<	N	8.8e-1	<	N	8.8e-1	<	9.7e-1		8.8e-1		N	8.5e-1	8.1e-1
Zinc (Zn)	7440-66-6	1.8e1		A	3.1e1		A	7.9e0		A	4.1e0		A	3.1e1		4.0e1		3.1e1		A	1.3e1	1.8e1
Total Metals																		1.7e2				
Total Detected Metals																		1.7e2				

APPENDIX C

PROCESS STREAM SAMPLING DATA

Table C-1. VOC target analyte list reported by the INTEC ALD.

CAS #	Compound	CAS #	Compound
74-87-3	Chloromethane	79-01-6	Trichloroethene
75-01-04	Vinyl Chloride	78-87-5	1,2-Dichloropropane
74-83-9	Bromomethane	75-27-4	Bromodichloromethane
75-00-3	Chloroethane	10061-01-5	Cis-1,3-dichloropropene
75-69-4	Trichlorofluoromethane	108-10-1	4-Methyl-2-pentanone
75-35-4	1,1-Dichloroethene	108-88-3	Toluene
76-13-1	1,1,2-Trichloro-1,2,2-trifluoroethane	10061-02-6	Trans-1,3-dichloropropene
75-15-0	Carbon disulfide	79-00-5	1,1,2-Trichloroethane
67-64-1	Acetone	127-18-4	Tetrachloroethene
75-09-2	Methylene chloride (Dichloromethane)	591-78-6	2-Hexanone
156-60-5	Trans-1,2-dichloroethene	124-48-1	Dibromochloromethane
75-34-3	1,1-Dichloroethane	108-90-7	Chlorobenzene
156-59-2	Cis-1,2-dichloroethene	100-41-4	Ethylbenzene
78-93-3	2-Butanone	108-38-3	M-xylene and 106-42-3 p-xylene
67-66-3	Chloroform	95-47-6	O-xylene
71-55-6	1,1,1-Trichloroethane	100-42-5	Styrene
56-23-5	Carbon tetrachloride	75-25-2	Bromoform
71-43-2	Benzene	79-34-5	1,1,2,2-Tetrachloroethane
107-06-2	1,2-Dichloroethane		

Table C-2. SVOC target analyte list reported by the INTEC ALD.

CAS #	Compound	CAS #	Compound
62-75-9	N-Nitrosodimethylamine	83-32-9	Acenaphthene
110-86-1	Pyridine	51-28-5	2,4-Dinitrophenol
108-95-2	Phenol	100-02-7	4-Nitrophenol
111-44-4	bis(2-Chloroethyl)ether	132-64-9	Dibenzofuran
95-57-8	2-Chlorophenol	121-14-2	2,4-Dinitrotoluene
541-73-1	1,3-Dichlorobenzene	84-66-2	Diethylphthalate
106-46-7	1,4-Dichlorobenzene	7005-72-3	4-Chlorophenyl-phenylether
95-50-1	1,2-Dichlorobenzene	86-73-7	Fluorene
95-48-7	2-Methylphenol	100-01-6	4-Nitroaniline
108-60-1	bis(2-Chloroisopropyl)ether	534-52-1	4,6-Dinitro-2-methylphenol
106-44-5	3 & 4-Methylphenol	86-30-6	N-Nitrosodiphenylamine
621-64-7	N-Nitroso-di-n-propylamine	126-73-8	Tri-n-butyl phosphate
67-72-1	Hexachloroethane	103-33-3	Azobenzene
98-95-3	Nitrobenzene	101-55-3	4-Bromophenyl-phenylether
78-59-1	Isophorone	118-74-1	Hexachlorobenzene
88-75-5	2-Nitrophenol	87-86-5	Pentachlorophenol
105-67-9	2,4-Dimethylphenol	85-01-8	Phenanthrene
111-91-1	bis(2-Chloroethoxy)methane)	120-12-7	Anthracene
120-83-2	2,4-Dichlorophenol	86-74-8	Carbazole
120-82-1	1,2,4-Trichlorobenzene	84-74-2	Di-n-butylphthalate
91-20-3	Naphthalene	206-44-0	Fluoranthene
106-47-8	4-Chloroaniline	129-00-0	Pyrene
87-68-3	Hexachlorobutadiene	85-68-7	Butylbenzylphthalate
59-50-7	4-Chloro-3-methylphenol	91-94-1	3,3'-Dichlorobenzidine
91-57-6	2-Methylnaphthalene	218-01-9	Chrysene
77-47-4	Hexachlorocyclopentadiene	56-55-3	Benzo(a)anthracene
88-06-2	2,4,6-Trichlorophenol	117-81-7	bis(2-Ethylhexyl)phthalate
95-95-4	2,4,5-Trichlorophenol	117-84-0	Di-n-octylphthalate
91-58-7	2-Chloronaphthalene	205-99-2	Benzo(b)fluoranthene
88-74-4	2-Nitroaniline	207-08-9	Benzo(k)fluoranthene
131-11-3	Dimethylphthalate	50-32-8	Benzo(a)pyrene
606-20-2	2,6-Dinitrotoluene	193-39-5	Indeno(1,2,3-cd)pyrene
208-96-8	Acenaphthylene	53-70-3	Dibenzo(a,h)anthracene
99-09-2	3-Nitroaniline	191-24-2	Benzo(g,h,I)perylene

FEED SAMPLES ANALYSIS REPORTS

F I N A L R E P O R T for 150WM:181 198

Log Type: ** RCRA - PLANT **

Report for	: NWCF	Log Number	: 00-09272
Mailstop	: 5116	Phone Number	: 6-3226
Date Received	: Sep 27 2000	Date Approved	: Feb 21 2001
Time Received	: 10:38	Time Approved	: 09:01
GWA charged	: 561211110	Reviewed by BRIAN STORMS	
MSA mR/hr	: ?	Signature _____	
Hazard Index	: >1E4	Lab QC/QA reviewed by	
PCBs >50 ppm	: NO	Signature _____	

COMMENTS:

Analysis	Lab Spl ID	Field Spl ID	Method	Analyst	Results
Total Sr	0CD15	150WM/NEOPRENE	23381	BJS	7.549E+05 +- 4.0E+03 D/S/ML
Tritium	0CD15	150WM/NEOPRENE	33011	WDT	5.85E+02 +- 5.0E+01 D/S/ML

End of Report -- 2 results.

F I N A L R E P O R T for 150FEED:103 198/181

Log Type: ** PLANT **

Report for : NWCF
Mailstop : 5116

Log Number : 00-09274
Phone Number : 6-3226

Date Received : Sep 27 2000
Time Received : 11:11

Date Approved : Feb 20 2001
Time Approved : 10:11

GWA charged : 561211110

Reviewed by TIFFANY PARK

MSA mR/hr : COLD

Signature _____

Hazard Index : <1E4

Lab QC/QA reviewed by

PCBs >50 ppm : NO

Signature _____

COMMENTS:

Analysis	Lab Spl ID	Field Spl ID	Method	Analyst	Results
Acid	0CD21	150WM/NEOPRENE	57012	RAH	1.564E+00 +- 8.8E-02 Normal Acid
Aluminum	0CD25	FEED150/PLASTIC	87100	BCS	2.209E-01 +- 3.2E-03 MOLAR
Boron	0CD25	FEED150/PLASTIC	87100	BCS	1.30E-02 +- 2.9E-03 MOLAR
Cadmium	0CD25	FEED150/PLASTIC	87100	BCS	4.11E-03 +- 8.8E-04 MOLAR
Calcium	0CD25	FEED150/PLASTIC	87100	BCS	4.376E-02 +- 7.4E-04 MOLAR
Chloride	0CD21	150WM/NEOPRENE	57171	AWO	6.34E+02 +- 2.0E+01 ug/mL
Chromium	0CD25	FEED150/PLASTIC	87100	BCS	2.75E-03 +- 7.0E-04 MOLAR
Co60	0CD21	150WM/NEOPRENE	83993	SJH	2.61E+03 +- 1.3E+02 d/s/ml
Cs134	0CD21	150WM/NEOPRENE	83993	SJH	2.61E+03 +- 1.4E+02 d/s/ml
Cs137	0CD21	150WM/NEOPRENE	83993	SJH	9.56E+05 +- 3.5E+04 d/s/ml
Eu154	0CD21	150WM/NEOPRENE	83993	SJH	7.91E+03 +- 5.0E+02 d/s/ml
Eu155	0CD21	150WM/NEOPRENE	83993	SJH	1.79E+03 +- 2.2E+02 d/s/ml
Fluoride	0CD21	150WM/NEOPRENE	57093	BCS	1.612E+03 +- 1.8E+01 ug/mL
Iron	0CD25	FEED150/PLASTIC	87100	BCS	1.13E-02 +- 1.4E-03 MOLAR
Mercury	0CD25	FEED150/PLASTIC	87802	RDW	3.98E+02 +- 2.5E+01 ug/ml
NB94	0CD21	150WM/NEOPRENE	83993	SJH	1.17E+02 +- 1.2E+01 d/s/ml
Nitrate	0CD21	150WM/NEOPRENE	97074	BCS	2.839E+00 +- 2.7E-02 Molar
Potassium	0CD25	FEED150/PLASTIC	12800	SDN	3.21 E+04 ug/mL
Sodium	0CD25	FEED150/PLASTIC	12800	SDN	1.31 E+05 ug/mL
SpGr	0CD21	150WM/NEOPRENE	47981	AWO	1.16019E+00 +- 2.7E-04 @ 25/4
Sulfate	0CD21	150WM/NEOPRENE	97168	BCS	3.04E+03 +- 8.4E+02 ug/ml
Uranium PreP	0CD21	150WM/NEOPRENE	17929	BGP	1.0E+00 ml
Zirconium	0CD25	FEED150/PLASTIC	87100	BCS	5.3E-03 +- 2.9E-03 MOLAR
Zr95	0CD21	150WM/NEOPRENE	83993	SJH	4.63E+02 +- 3.4E+01 d/s/ml

End of Report -- 24 results.

F I N A L R E P O R T for 150FEED:103 199

Log Type: ** PLANT **

Report for : NWCF
Mailstop : 5116

Log Number : 00-10022
Phone Number : 6-3226

Date Received : Oct 12 2000
Time Received : 15:33

Date Approved : Mar 28 2001
Time Approved : 10:26

GWA charged : 561211290

Reviewed by KIMBERLY HONAS

MSA mR/hr : CELL

Signature _____

Hazard Index : 1E8

Lab QC/QA reviewed by

PCBs >50 ppm : NO

Signature _____

COMMENTS:

Analysis	Lab Spl ID	Field Spl ID	Method	Analyst	Results
Acid	0CD94	FEED150/NEOPRENE	57012	AWO	1.596E+00 +- 8.8E-02 Normal Acid
Aluminum	0CD95	FEED150/PLASTIC	87100	NWJ	2.189E-01 +- 6.3E-03 MOLAR
Boron	0CD95	FEED150/PLASTIC	87100	NWJ	1.34E-02 +- 2.9E-03 MOLAR
Cadmium	0CD95	FEED150/PLASTIC	87100	NWJ	4.26E-03 +- 8.8E-04 MOLAR
Calcium	0CD95	FEED150/PLASTIC	87100	NWJ	4.526E-02 +- 7.4E-04 MOLAR
Chloride	0CD94	FEED150/NEOPRENE	57171	AWO	4.15E+02 +- 1.7E+01 ug/mL
Chromium	0CD95	FEED150/PLASTIC	87100	NWJ	2.52E-03 +- 7.0E-04 MOLAR
Co60	0CD94	FEED150/NEOPRENE	93993	SJH	2.40E+03 +- 2.0E+02 d/s/ml
Cs134	0CD94	FEED150/NEOPRENE	93993	SJH	2.35E+03 +- 1.4E+02 d/s/ml
Cs137	0CD94	FEED150/NEOPRENE	93993	SJH	9.64E+05 +- 5.5E+04 d/s/ml
Eu154	0CD94	FEED150/NEOPRENE	93993	SJH	8.28E+03 +- 8.1E+02 d/s/ml
Eu155	0CD94	FEED150/NEOPRENE	93993	SJH	1.67E+03 +- 2.4E+02 d/s/ml
Fluoride	0CD94	FEED150/NEOPRENE	57093	BGP	2.594E+03 +- 3.8E+01 ug/mL
Iron	0CD95	FEED150/PLASTIC	87100	NWJ	1.21E-02 +- 1.4E-03 MOLAR
Mercury	0CD95	FEED150/PLASTIC	87802	BET	2.05E+02 +- 2.6E+01 ug/ml
NB94	0CD94	FEED150/NEOPRENE	93993	SJH	1.140E+02 +- 9.9E+00 d/s/ml
Nitrate	0CD94	FEED150/NEOPRENE	97074	BET	3.111E+00 +- 2.7E-02 Molar
Potassium	0CD95	FEED150/PLASTIC	12800	RHH	4.86E+03 ug/mL
Sb125	0CD94	FEED150/NEOPRENE	93993	SJH	1.85E+03 +- 1.8E+02 d/s/ml
Sodium	0CD95	FEED150/PLASTIC	12800	RHH	1.95E+04 ug/mL
SpGr	0CD94	FEED150/NEOPRENE	47981	AWO	1.15490E+00 +- 2.7E-04 @ 25/4
Sulfate	0CD94	FEED150/NEOPRENE	97168	BET	3.43E-02 +- 8.7E-03 molar
Uranium	0CD94	FEED150/NEOPRENE	17920	RAH	7.5E-02 +- 1.4E-02 G/L
Zirconium	0CD95	FEED150/PLASTIC	87100	NWJ	5.4E-03 +- 2.9E-03 MOLAR
Zr95	0CD94	FEED150/NEOPRENE	93993	SJH	4.27E+02 +- 5.2E+01 d/s/ml

End of Report -- 25 results.

F I N A L R E P O R T for 150WM:181 199

Log Type: ** RCRA - PLANT **

Report for : NWCF
Mailstop : 5116

Log Number : 00-100415
Phone Number : 6-3226

Date Received : Oct 05 2000
Time Received : 11:35

Date Approved : Feb 21 2001
Time Approved : 09:00

GWA charged : 591211290

Reviewed by BRIAN STORMS

MSA mR/hr : HOT

Signature _____

Hazard Index : >1E4

Lab QC/QA reviewed by

PCBs >50 ppm : NO

Signature _____

COMMENTS:

Analysis	Lab Spl ID	Field Spl ID	Method	Analyst	Results
Total Sr	0CF26	150WM/NEOPRENE	23381	BJS	8.983E+05 +- 4.3E+03 D/S/ML
Tritium	0CF26	150WM/NEOPRENE	33011	WDT	5.71E+02 +- 4.9E+01 D/S/ML

End of Report -- 2 results.

F I N A L R E P O R T for 150WM:181 200

Log Type: ** RCRA - PLANT **

Report for : NWCF
Mailstop : 5116

Log Number : 00-10164
Phone Number : 6-3226

Date Received : Oct 17 2000
Time Received : 17:04

Date Approved : Feb 21 2001
Time Approved : 08:59

GWA charged : 561211290

Reviewed by BRIAN STORMS

MSA mR/hr : CELL

Signature _____

Hazard Index : 1E8

Lab QC/QA reviewed by

PCBs >50 ppm : NO

Signature _____

COMMENTS:

Analysis	Lab Spl ID	Field Spl ID	Method	Analyst	Results
Total Sr	0CG62	WM181/NEOPREN	23381	BJS	7.656E+05 +- 4.3E+03 D/S/ML
Tritium	0CG62	WM181/NEOPREN	33011	WDT	4.66E+02 +- 4.0E+01 D/S/ML

End of Report -- 2 results.

F I N A L R E P O R T for 150FEED:103 200

Log Type: ** PLANT **

Report for : NWCF
Mailstop : 5116

Log Number : 00-10167
Phone Number : 6-3226

Date Received : Oct 17 2000
Time Received : 05:53

Date Approved : Nov 02 2000
Time Approved : 10:54

GWA charged : 561211290

Reviewed by JEFF LAUG

MSA mR/hr : COLD

Signature _____

Hazard Index : <1E4

Lab QC/QA reviewed by

PCBs >50 ppm : NO

Signature _____

COMMENTS:

Analysis	Lab Spl ID	Field Spl ID	Method	Analyst	Results
Acid	0CG70	103	57012	RAH	1.633E+00 +- 8.8E-02 Normal Acid
Aluminum	0CG70	103	87100	BCS	2.127E-01 +- 6.3E-03 MOLAR
		0CG74	87100	NWJ	2.341E-01 +- 6.2E-03 MOLAR
Boron	0CG70	103	87100	NWJ	1.37E-02 +- 2.8E-03 MOLAR
Cadmium	0CG70	103	87100	NWJ	4.20E-03 +- 8.7E-04 MOLAR
Calcium	0CG70	103	87100	NWJ	4.684E-02 +- 7.3E-04 MOLAR
Chloride	0CG70	103	57171	RAH	4.15E+02 +- 1.1E+01 ug/mL
Chromium	0CG70	103	87100	NWJ	2.84E-03 +- 6.9E-04 MOLAR
Co60	0CG70	103	93993	SJH	2.32E+03 +- 1.9E+02 d/s/ml
Cs134	0CG70	103	93993	SJH	2.39E+03 +- 1.4E+02 d/s/ml
Cs137	0CG70	103	93993	SJH	9.69E+05 +- 5.7E+04 d/s/ml
Eu154	0CG70	103	93993	SJH	7.28E+03 +- 8.5E+02 d/s/ml
Eu155	0CG70	103	93993	SJH	1.67E+03 +- 2.3E+02 d/s/ml
Fluoride	0CG70	103	57093	BCS	1.543E+03 +- 8.4E+01 ug/mL
Iron	0CG70	103	87100	NWJ	1.29E-02 +- 1.4E-03 MOLAR
Mercury		0CG74	87802	RAH	1.21E+02 +- 2.7E+01 ug/ml
NB94	0CG70	103	93993	SJH	1.38E+02 +- 1.4E+01 d/s/ml
Nitrate	0CG70	103	97074	BGP	3.222E+00 +- 2.7E-02 Molar
Potassium		0CG74	12800	RHH	4.97E+03 ug/mL
Sb125	0CG70	103	93993	SJH	1.36E+03 +- 1.2E+02 d/s/ml
Sodium		0CG74	12800	RHH	1.96E+04 ug/mL
SpGr	0CG70	103	47981	RAH	1.15786E+00 +- 2.7E-04 @ 25/4
Sulfate	0CG70	103	97168	BGP	3.70E+03 +- 8.5E+02 ug/ml
Uranium	0CG70	103	17920	RAH	7.4E-02 +- 1.4E-02 G/L
Zirconium	0CG70	103	87100	NWJ	5.3E-03 +- 2.8E-03 MOLAR
Zr95	0CG70	103	93993	SJH	4.49E+02 +- 5.2E+01 d/s/ml

End of Report -- 26 results.

F I N A L R E P O R T for 150FEED:184

Log Type: ** PLANT **

Report for : NWCF
Mailstop : 5116

Log Number : 01-04103
Phone Number : 6-3226

Date Received : Apr 10 2001
Time Received : 13:42

Date Approved : Apr 24 2001
Time Approved : 15:44

GWA charged : 561211290

Reviewed by KIMBERLY HONAS

MSA mR/hr : HOT

Signature _____

Hazard Index : <1E4

Lab QC/QA reviewed by

PCBs >50 ppm : NO

Signature _____

COMMENTS:

Analysis	Lab Spl ID	Field Spl ID	Method	Analyst	Results
Acid	1AU03	FEED150/NEOPRENE	57012	RAH	1.842E+00 +- 5.5E-02 Normal Acid
Aluminum	1AU03	FEED150/NEOPRENE	87100	RAH	5.26E-01 +- 2.4E-02 MOLAR
Boron	1AU04	FEED150/PLASTIC	87100	RAH	7.6E-03 +- 1.4E-03 MOLAR
Cadmium	1AU04	FEED150/PLASTIC	87100	RAH	< 9.47983E-04 MOLAR
Calcium	1AU04	FEED150/PLASTIC	87100	RAH	1.618E-02 +- 3.8E-04 MOLAR
Chloride	1AU03	FEED150/NEOPRENE	57171	RAH	9.77E+02 +- 1.8E+01 ug/mL
Chromium	1AU04	FEED150/PLASTIC	87100	RAH	1.69E-03 +- 4.7E-04 MOLAR
Co57	1AU03	FEED150/NEOPRENE	43993	MLE	1.171E+04 +- 7.2E+02 pC/ml
Co60	1AU03	FEED150/NEOPRENE	43993	MLE	1.357E+04 +- 6.0E+02 pC/ml
Cs137	1AU03	FEED150/NEOPRENE	43993	MLE	1.280E+07 +- 2.8E+05 pC/ml
Eu154	1AU03	FEED150/NEOPRENE	43993	MLE	2.99E+04 +- 3.5E+03 pC/ml
Fluoride	1AU03	FEED150/NEOPRENE	57093	BGP	5.52E+02 +- 4.3E+01 ug/mL
Iron	1AU04	FEED150/PLASTIC	87100	RAH	1.422E-02 +- 8.5E-04 MOLAR
Mercury	1AU04	FEED150/PLASTIC	87802	RDW	1.50E+02 +- 1.2E+01 ug/ml
Nitrate	1AU03	FEED150/NEOPRENE	97074	BCS	3.91E+00 +- 1.2E-01 Molar
PREP	1AU03	FEED150/NEOPRENE	17961	BCS	Prep Completed 2001-04-12 10:07
Potassium	1AU04	FEED150/PLASTIC	12800	SDN	3.50 E+03 ug/mL
Sodium	1AU04	FEED150/PLASTIC	12800	SDN	3.04 E+04 ug/mL
SpGr	1AU03	FEED150/NEOPRENE	47981	RAH	1.22196E+00 +- 3.7E-04 @ 25/4
Sulfate	1AU03	FEED150/NEOPRENE	97168	BCS	1.56E+03 +- 1.0E+02 ug/ml
Uranium	1AU03	FEED150/NEOPRENE	17920	RAH	4.41E-02 +- 1.7E-03 G/L
Zirconium	1AU04	FEED150/PLASTIC	87100	RAH	< 2.78182E-03 MOLAR

End of Report -- 22 results.

F I N A L R E P O R T for 150FEED:184 281

Log Type: ** PLANT **

Report for : NWCF
Mailstop : 5116

Log Number : 01-04125
Phone Number : 6-3226

Date Received : Apr 13 2001
Time Received : 00:15

Date Approved : May 01 2001
Time Approved : 08:15

GWA charged : 561211290

Reviewed by TIFFANY PARK

MSA mR/hr : COLD

Signature _____

Hazard Index : <1E4

Lab QC/QA reviewed by

PCBs >50 ppm : NO

Signature _____

COMMENTS:

Analysis	Lab Spl ID	Field Spl ID	Method	Analyst	Results
Acid	1AU88	FEED150/NEOPRENE	57012	RDW	1.823E+00 +- 1.9E-02 Normal Acid
Aluminum	1AU89	FEED150/PLASTIC	87100	BCS	5.37E-01 +- 2.0E-02 MOLAR
	1AU89	FEED150/PLASTIC	87100	BCS	> 1.34297E-01 MOLAR
Boron	1AU89	FEED150/PLASTIC	87100	BCS	8.2E+01 +- 1.5E+01 UG/ML
Cadmium	1AU89	FEED150/PLASTIC	87100	BCS	< 1.06553E+02 UG/ML
Calcium	1AU89	FEED150/PLASTIC	87100	BCS	6.53E+02 +- 1.5E+01 UG/ML
Chloride	1AU88	FEED150/NEOPRENE	57171	BCS	9.87E+02 +- 1.8E+01 ug/mL
Chromium	1AU89	FEED150/PLASTIC	87100	BCS	8.6E+01 +- 2.4E+01 UG/ML
Co60	1AU88	FEED150/NEOPRENE	83993	SJH	1.710E+07 +- 8.5E+05 pC/l
Cs134	1AU88	FEED150/NEOPRENE	83993	SJH	5.46E+06 +- 3.2E+05 pC/l
Cs137	1AU88	FEED150/NEOPRENE	83993	SJH	1.424E+10 +- 4.6E+08 pC/l
Eu154	1AU88	FEED150/NEOPRENE	83993	SJH	3.19E+07 +- 2.5E+06 pC/l
Fluoride	1AU88	FEED150/NEOPRENE	57093	AWO	4.90E+02 +- 4.1E+01 ug/mL
Iron	1AU89	FEED150/PLASTIC	87100	BCS	7.72E+02 +- 4.8E+01 UG/ML
Mercury	1AU89	FEED150/PLASTIC	87802	RDW	1.27E+02 +- 1.2E+01 ug/ml
Nitrate	1AU88	FEED150/NEOPRENE	97074	BCS	3.89E+00 +- 1.2E-01 Molar
Potassium	1AU89	FEED150/PLASTIC	12800	RHH	3.44E+03 ug/mL
Sodium	1AU89	FEED150/PLASTIC	12800	RHH	3.02E+04 ug/mL
SpGr	1AU88	FEED150/NEOPRENE	47981	BCS	1.22008E+00 +- 3.7E-04 @ 25/4
Sulfate	1AU88	FEED150/NEOPRENE	97168	BCS	8.4E+02 +- 1.1E+02 ug/ml
Uranium	1AU88	FEED150/NEOPRENE	17920	BCS	4.40E-02 +- 1.7E-03 G/L
Zirconium	1AU89	FEED150/PLASTIC	87100	BCS	< 2.53758E+02 UG/ML

End of Report -- 22 results.

F I N A L R E P O R T for 150FEED:184 WM184

Log Type: ** PLANT **

Report for : NWCF
Mailstop : 5116

Log Number : 01-04142
Phone Number : 6-3226

Date Received : Apr 14 2001
Time Received : 12:25

Date Approved : May 01 2001
Time Approved : 08:16

GWA charged : 561211290

Reviewed by TIFFANY PARK

MSA mR/hr : CELL

Signature _____

Hazard Index : 1E7

Lab QC/QA reviewed by

PCBs >50 ppm : NO

Signature _____

COMMENTS:

Analysis	Lab Spl ID	Field Spl ID	Method	Analyst	Results
Acid	1AU93	FEED150/NEOPRENE	57012	RDW	1.854E+00 +- 1.9E-02 Normal Acid
Aluminum	1AU94	FEED150/PLASTIC	87100	BCS	5.21E-01 +- 2.0E-02 MOLAR
Am241	1AU93	FEED150/NEOPRENE	83993	SJH	1.30E+08 +- 1.4E+07 pC/l
Boron	1AU93	FEED150/NEOPRENE	87100	BCS	8.9E+01 +- 1.5E+01 UG/ML
Cadmium	1AU93	FEED150/NEOPRENE	87100	BCS	< 1.06553E+02 UG/ML
Calcium	1AU93	FEED150/NEOPRENE	87100	BCS	6.77E+02 +- 1.5E+01 UG/ML
Chloride	1AU93	FEED150/NEOPRENE	57171	BCS	1.005E+03 +- 1.8E+01 ug/mL
Chromium	1AU93	FEED150/NEOPRENE	87100	BCS	9.2E+01 +- 2.4E+01 UG/ML
Co60	1AU93	FEED150/NEOPRENE	83993	SJH	1.697E+07 +- 7.9E+05 pC/l
Cs134	1AU93	FEED150/NEOPRENE	83993	SJH	5.55E+06 +- 3.1E+05 pC/l
Cs137	1AU93	FEED150/NEOPRENE	83993	SJH	1.438E+10 +- 5.5E+08 pC/l
Eu154	1AU93	FEED150/NEOPRENE	83993	SJH	3.24E+07 +- 2.8E+06 pC/l
Fluoride	1AU93	FEED150/NEOPRENE	57093	AWO	4.94E+02 +- 4.2E+01 ug/mL
Iron	1AU93	FEED150/NEOPRENE	87100	BCS	8.32E+02 +- 4.8E+01 UG/ML
Mercury	1AU94	FEED150/PLASTIC	87802	RAH	1.36E+02 +- 1.2E+01 ug/ml
Nitrate	1AU93	FEED150/NEOPRENE	97074	BCS	3.96E+00 +- 1.2E-01 Molar
Potassium	1AU94	FEED150/PLASTIC	12800	RHH	3.44E+03 ug/mL
Sodium	1AU94	FEED150/PLASTIC	12800	RHH	3.12E+04 ug/mL
SpGr	1AU93	FEED150/NEOPRENE	47981	AWO	1.24092E+00 +- 4.0E-04 @ 25/4
Sulfate	1AU93	FEED150/NEOPRENE	97168	BCS	1.02E+03 +- 1.1E+02 ug/ml
Uranium	1AU93	FEED150/NEOPRENE	17920	RAH	3.99E-02 +- 1.5E-03 G/L
Zirconium	1AU93	FEED150/NEOPRENE	87100	BCS	< 2.53758E+02 UG/ML

End of Report -- 22 results.

F I N A L R E P O R T for 150FEED:101 294

Log Type: ** PLANT **

Report for : NWCF
Mailstop : 5116

Log Number : 01-05062
Phone Number : 6-3226

Date Received : May 06 2001
Time Received : 15:45

Date Approved : May 24 2001
Time Approved : 13:26

GWA charged : 561211290

Reviewed by TIFFANY PARK

MSA mR/hr : CELL

Signature _____

Hazard Index : 1E8

Lab QC/QA reviewed by

PCBs >50 ppm : NO

Signature _____

COMMENTS:

Analysis	Lab Spl ID	Field Spl ID	Method	Analyst	Results
Acid	1BB06	FEED150/NEOPRENE	57012	RNR	1.781E+00 +- 5.4E-02 Normal Acid
Aluminum	1BB07	FEED150/PLASTIC	87100	BCS	4.51E-01 +- 2.4E-02 MOLAR
Boron	1BB07	FEED150/PLASTIC	87100	BCS	1.05E+02 +- 1.5E+01 UG/ML
Cadmium	1BB07	FEED150/PLASTIC	87100	BCS	1.75E+02 +- 4.8E+01 UG/ML
Calcium	1BB07	FEED150/PLASTIC	87100	BCS	1.013E+03 +- 1.5E+01 UG/ML
Chloride	1BB06	FEED150/NEOPRENE	57171	RNR	8.02E+02 +- 1.7E+01 ug/mL
Chromium	1BB07	FEED150/PLASTIC	87100	BCS	1.01E+02 +- 2.4E+01 UG/ML
Cs134	1BB06	FEED150/NEOPRENE	93993	SJH	2.12E+07 +- 2.1E+06 pC/l
Cs137	1BB06	FEED150/NEOPRENE	93993	SJH	1.94E+10 +- 1.3E+09 pC/l
Fluoride	1BB06	FEED150/NEOPRENE	57093	BCS	9.49E+02 +- 6.0E+01 ug/mL
Iron	1BB07	FEED150/PLASTIC	87100	BCS	7.42E+02 +- 4.8E+01 UG/ML
Mercury	1BB07	FEED150/PLASTIC	87802	RAH	1.23E+02 +- 2.9E+01 ug/ml
NB94	1BB06	FEED150/NEOPRENE	93993	SJH	2.09E+06 +- 2.8E+05 pC/l
Nitrate	1BB06	FEED150/NEOPRENE	97074	BGP	3.279E+00 +- 4.5E-02 Molar
PREP	1BB06	FEED150/NEOPRENE	17961	BCS	Prep Completed 2001-05-15 08:46
Potassium	1BB07	FEED150/PLASTIC	12800	RHH	3.86E+03 ug/mL
Sodium	1BB07	FEED150/PLASTIC	12800	RHH	2.69E+04 ug/mL
SpGr	1BB06	FEED150/NEOPRENE	47981	BGP	1.19761E+00 +- 3.4E-04 @ 25/4
Sulfate	1BB06	FEED150/NEOPRENE	97168	BGP	2.77E+03 +- 4.0E+02 ug/ml
Uranium	1BB06	FEED150/NEOPRENE	17920	BCS	4.90E-02 +- 2.9E-03 G/L
Zirconium	1BB07	FEED150/PLASTIC	87100	BCS	< 2.54584E+02 UG/ML
Zr95	1BB06	FEED150/NEOPRENE	93993	SJH	4.77E+06 +- 7.4E+05 pC/l

End of Report -- 22 results.

F I N A L R E P O R T for 150WM:101 294

Log Type: ** RCRA - PLANT **

Report for : NWCF
Mailstop : 5116

Log Number : 01-05063
Phone Number : 6-3226

Date Received : May 06 2001
Time Received : 15:55

Date Approved : May 30 2001
Time Approved : 13:13

GWA charged : 561211290

Reviewed by TIFFANY PARK

MSA mR/hr : CELL

Signature _____

Hazard Index : 1E8

Lab QC/QA reviewed by

PCBs >50 ppm : NO

Signature _____

COMMENTS:

Analysis	Lab Spl ID	Field Spl ID	Method	Analyst	Results
PREP	1BB08	150WM/NEOPRENE	17961	BGP	Prep Completed 2001-05-16 06:07
Total Sr	1BB08	150WM/NEOPRENE	23381	BJS	2.50E+05 +- 3.6E+04 D/S/ML
Tritium	1BB08	150WM/NEOPRENE	33011	WDT	8.26E+02 +- 7.1E+01 D/S/ML

End of Report -- 3 results.

F I N A L R E P O R T for 150WM:101 298

Log Type: ** RCRA - PLANT **

Report for : NWCF
Mailstop : 5116

Log Number : 01-05112
Phone Number : 6-3226

Date Received : May 11 2001
Time Received : 09:43

Date Approved : May 30 2001
Time Approved : 13:13

GWA charged : 561211290

Reviewed by TIFFANY PARK

MSA mR/hr : ?

Signature _____

Hazard Index : >1E4

Lab QC/QA reviewed by

PCBs >50 ppm : NO

Signature _____

COMMENTS:

Analysis	Lab Spl ID	Field Spl ID	Method	Analyst	Results
PREP	1BD35	150WM/NEOPRENE	17961	BCS	Prep Completed 2001-05-15 08:48
Total Sr	1BD35	150WM/NEOPRENE	23381	BJS	6.19E+05 +- 6.5E+04 D/S/ML
Tritium	1BD35	150WM/NEOPRENE	33011	WDT	8.11E+02 +- 6.9E+01 D/S/ML

End of Report -- 3 results.

I N T E R I M R E P O R T for BOPR:NCC-101

Log Type: ** RCRA **

Report for : JD LONG
Mailstop : 5218
Log Number : 01-06071
Phone Number : 6-7552

Date Received : Jun 07 2001
Time Received : 09:00

GWA charged : 561C022A9

MSA mR/hr : HOT

Hazard Index : >1E4

PCBs >50 ppm : NO

COMMENTS: If fail to get a acid result in range then run pH. pH does not need to be RCRA

Analysis	Lab Spl ID	Field Spl ID	Method	Analyst	Results
Acid	1BI26	BP10120101	57012	RNR	1.711E+00 +- 5.4E-02 Normal Acid
Aluminum	1BI26	BP10120101	42900	LAM	1.14534E+07 ug/L
Antimony	1BI26	BP10120101	42900	LAM	Not Detected: IDL= 235 ug/L
Arsenic	1BI26	BP10120101	42900	LAM	3.35E+02 ug/L
Barium	1BI26	BP10120101	42900	LAM	3.985E+03 ug/L
Beryllium	1BI26	BP10120101	42900	LAM	9.5E+01 ug/L
Cadmium	1BI26	BP10120101	42900	LAM	1.7555E+05 ug/L
Chromium	1BI26	BP10120101	42900	LAM	1.02E+05 ug/L
Cobalt	1BI26	BP10120101	42900	LAM	1.67E+03 ug/L
Copper	1BI26	BP10120101	42900	LAM	2.697E+04 ug/L
Fluoride	1BI26	BP10120101	57093	AWO	8.26654E+02 ug/mL
Lead	1BI26	BP10120101	42900	LAM	1.1125E+05 ug/L
Manganese	1BI26	BP10120101	42900	LAM	4.30765E+05 ug/L
Mercury	1BI26	BP10120101	12800	SDN	1.49E+05 ug/L
Nickel	1BI26	BP10120101	42900	LAM	6.64E+04 ug/L
SVOA (TOTAL)	1BI26	BP10120101	9270		
Selenium	1BI26	BP10120101	42900	LAM	Not Detected: IDL= 240 ug/L
Silver	1BI26	BP10120101	42900	LAM	1.2E+02 ug/L
TIC	1BI26	BP10120101	18060	RDW	MDL=119.004 ug/ml
TOC	1BI26	BP10120101	18060	RDW	6.08462E+02 ug/ml
Thallium	1BI26	BP10120101	42900	LAM	Not Detected: IDL= 200 ug/L
UDS	1BI26	BP10120101	17972	BCS	0.619 g(UDS)/ L
Uranium	1BI26	BP10120101	17920	BCS	4.98E-02 +- 2.9E-03 G/L
VOA (TOTAL)	1BI26	BP10120101	9260		
	1BI27	BP10120201	9260		
Vanadium	1BI26	BP10120101	42900	LAM	6.1E+02 ug/L
Zinc	1BI26	BP10120101	42900	LAM	4.12784E+04 ug/L

End of Report -- 27 results.

CONCENTRATED BOTTOMS SAMPLES ANALYSIS REPORTS

F I N A L R E P O R T for 150BOT119 296/297

Log Type: ** PLANT **

Report for : NWCF
Mailstop : 5216

Log Number : 01-05106
Phone Number : 6-3226

Date Received : May 10 2001
Time Received : 23:55

Date Approved : Feb 04 2002
Time Approved : 13:07

GWA charged : 561211295

Reviewed by BRIAN STORMS

MSA mR/hr : HOT

Signature _____

Hazard Index : 1E8

Lab QC/QA reviewed by

PCBs >50 ppm : NO

Signature _____

COMMENTS:

Analysis	Lab Spl ID	Field Spl ID	Method	Analyst	Results
Acid	1BD27	150BOT119PLAS	57012	BGP	2.559E+00 +- 6.0E-02 Normal Acid
Aluminum	1BD27	150BOT119PLAS	7100		5.18E-01 +- 2.4E-02 MOLAR
Chloride	1BD27	150BOT119PLAS	57171	BGP	8.02E+02 +- 1.7E+01 ug/mL
Co60	1BD28	150BOT119	93993	SJH	3.32E+07 +- 2.6E+06 pC/l
	1BE80	150BOT119 DUP	83993	SJH	3.71E+07 +- 1.8E+06 pC/l
Cs134	1BD28	150BOT119	93993	SJH	2.33E+07 +- 1.8E+06 pC/l
	1BE80	150BOT119 DUP	83993	SJH	2.38E+07 +- 1.2E+06 pC/l
Cs137	1BD28	150BOT119	93993	SJH	2.13E+10 +- 1.6E+09 pC/l
	1BE80	150BOT119 DUP	83993	SJH	2.116E+10 +- 7.0E+08 pC/l
Eu154	1BD28	150BOT119	93993	SJH	8.42E+07 +- 7.8E+06 pC/l
	1BE80	150BOT119 DUP	83993	SJH	9.66E+07 +- 7.8E+06 pC/l
Fluoride	1BD27	150BOT119PLAS	57093	BGP	8.85E+02 +- 7.8E+01 ug/mL
Nitrate	1BD27	150BOT119PLAS	97074	BGP	4.03E+00 +- 1.2E-01 Molar
PREP	1BD27	150BOT119PLAS	17961	BGP	Prep Completed 2001-05-11 02:41
	1BD28	150BOT119	17961	BCS	Prep Completed 2001-05-15 08:47
Phosphorous	1BD27	150BOT119PLAS	42900	RHH	1.19887E+02 ug/ml
Potassium	1BD28	150BOT119	12800	SDN	6.20E+02 ug/mL
Sodium	1BD28	150BOT119	12800	SDN	1.16E+04 ug/mL
SpGr	1BD27	150BOT119PLAS	47981	BGP	1.07469E+00 +- 1.7E-04 @ 25/4
Tritium	1BD27	150BOT119PLAS	33011	WDT	4.01E+02 +- 3.4E+01 D/S/ML
UDS	1BD27	150BOT119PLAS	17972	BGP	5.3 G/L
Uranium	1BD28	150BOT119	17920	BCS	5.87E-02 +- 2.4E-03 G/L
Zr95	1BD28	150BOT119	93993	SJH	5.52E+06 +- 4.4E+05 pC/l
	1BE80	150BOT119 DUP	83993	SJH	5.04E+06 +- 3.5E+05 pC/l

End of Report -- 24 results.

I N T E R I M R E P O R T for 150BOT119 324

Log Type: ** PLANT **

Report for : NWCF
Mailstop : 5216

Log Number : 01-06146
Phone Number : 6-3226

Date Received : Jun 15 2001
Time Received : 00:15

GWA charged : 561211295

MSA mR/hr : HOT

Hazard Index : 1E8

PCBs >50 ppm : NO

COMMENTS:

Analysis	Lab Spl ID	Field Spl ID	Method	Analyst	Results
Acid	1BK68	150BOT119	57012	BGP	2.868E+00 +- 6.2E-02 Normal Acid
Aluminum	1BK68	150BOT119	87100	BCS	8.59E-01 +- 3.0E-02 MOLAR
Chloride	1BK68	150BOT119	57171	BGP	1.016E+03 +- 1.8E+01 ug/mL
Fluoride	1BK68	150BOT119	57093	AWO	1.71E+03 +- 1.2E+02 ug/mL
I129	1BK68	150BOT119	3539		
Nitrate	1BK68	150BOT119	97074	BCS	5.27E+00 +- 1.8E-01 Molar
PREP	1BK68	150BOT119	17961	RAH	Prep Completed 2001-07-02 13:24
	1BK68	150BOT119	17961	BCS	Prep Completed 2001-06-17 17:06
Phosphorous	1BK68	150BOT119	42900	RHH	4.33229E+02 ug/ml
Potassium	1BK68	150BOT119	12800	SDN	5.06E+03 ug/mL
Sodium	1BK68	150BOT119	12800	SDN	3.59E+04 ug/mL
SpGr	1BK68	150BOT119	47981	BGP	1.35635E+00 +- 5.6E-04 @ 25/4
Tritium	1BK68	150BOT119	33011	WDT	5.6E+02 +- 1.0E+02 D/S/ML
UDS	1BK68	150BOT119	17972	RNR	1.187 g/L
Uranium	1BK68	150BOT119	17920	RAH	7.39E-02 +- 3.7E-03 G/L

End of Report -- 15 results.

I N T E R I M R E P O R T for BOPR:NCC-119

Log Type: ** RCRA **

Report for : JD LONG
Mailstop : 5218

Log Number : 01-06214
Phone Number : 6-7552

Date Received : Jun 21 2001
Time Received : 12:51

GWA charged : 561C022AA

MSA mR/hr : HOT

Hazard Index : >1E4

PCBs >50 ppm : NO

COMMENTS: If fail to get a acid result in range then run pH. pH does not need to be RCRA samples to include trip blank (BP10130201)

Analysis	Lab Spl ID	Field Spl ID	Method	Analyst	Results
Acid	1BL27	BP10130101	57012	BET	1.741E+00 +- 5.4E-02 Normal Acid
Aluminum	1BL27	BP10130101	42900	LAM	8.4336E+06 ug/L
Antimony	1BL27	BP10130101	42900	LAM	1.56E+03 ug/L
Arsenic	1BL27	BP10130101	42900	LAM	Not Detected: IDL= 580 ug/L
Barium	1BL27	BP10130101	42900	LAM	2.96E+03 ug/L
Beryllium	1BL27	BP10130101	42900	LAM	6.0E+01 ug/L
Cadmium	1BL27	BP10130101	42900	LAM	1.4692E+05 ug/L
Chromium	1BL27	BP10130101	42900	LAM	8.702E+04 ug/L
Cobalt	1BL27	BP10130101	42900	LAM	1.42E+03 ug/L
Copper	1BL27	BP10130101	42900	LAM	1.908E+04 ug/L
Fluoride	1BL27	BP10130101	57093	BET	1.00262E+03 mg/L
Lead	1BL27	BP10130101	42900	LAM	8.628E+04 ug/L
Manganese	1BL27	BP10130101	42900	LAM	3.392E+05 ug/L
Mercury	1BL27	BP10130101	12800	SDN	1.14E+05 ug/L
Nickel	1BL27	BP10130101	42900	LAM	5.532E+04 ug/L
SVOA (TOTAL)	1BL27	BP10130101	9270		
Selenium	1BL27	BP10130101	42900	LAM	Not Detected: IDL= 960 ug/L
Silver	1BL27	BP10130101	42900	LAM	Not Detected: IDL= 400 ug/L
TIC	1BL27	BP10130101	18060	RDW	MDL=119.004 ug/ml
TOC	1BL27	BP10130101	18060	RDW	7.5499E+02 ug/ml
Thallium	1BL27	BP10130101	42900	LAM	Not Detected: IDL= 800 ug/L
UDS	1BL27	BP10130101	17972	RNR	1.288 g/L
Uranium	1BL27	BP10130101	17920	BCS	6.22E-02 +- 3.3E-03 G/L
VOA (TOTAL)	1BL27	BP10130101	9260		
	1BL28	BP10130201	9260		
Vanadium	1BL27	BP10130101	42900	LAM	5.6E+02 ug/L
Zinc	1BL27	BP10130101	42900	LAM	3.23E+04 ug/L

End of Report -- 27 results.

I N T E R I M R E P O R T for 150BOT119 333/334

Log Type: ** PLANT **

Report for : NWCF
Mailstop : 5216

Log Number : 01-06233
Phone Number : 6-3226

Date Received : Jun 24 2001
Time Received : 11:42

GWA charged : 561211295

MSA mR/hr : CELL

Hazard Index : 1E8

PCBs >50 ppm : NO

COMMENTS:

Analysis	Lab Spl ID	Field Spl ID	Method	Analyst	Results
Acid	1BL41	150BOT119	57012	RDW	2.830E+00 +- 6.2E-02 Normal Acid
Aluminum	1BL41	150BOT119	87100	BCS	7.11E-01 +- 2.9E-02 MOLAR
Chloride	1BL41	150BOT119	57171	RDW	1.323E+03 +- 2.2E+01 ug/mL
Fluoride	1BL41	150BOT119	57093	BGP	1.30E+03 +- 1.0E+02 ug/mL
I129	1BL41	150BOT119	3539		
Nitrate	1BL41	150BOT119	97074	BCS	7.22E+00 +- 1.7E-01 Molar
PREP	1BL41	150BOT119	17961	RAH	Prep Completed 2001-07-02 13:23
Phosphorous	1BL41	150BOT119	42900	RHH	4.282E+02 ug/ml
Potassium	1BL41	150BOT119	12800	SDN	6.04E+03 ug/mL
Sodium	1BL41	150BOT119	12800	SDN	4.39E+04 ug/mL
SpGr	1BL41	150BOT119	47981	BCS	1.30357E+00 +- 4.9E-04 @ 25/4
Tritium	1BL41	150BOT119	33011	WDT	Data not approved yet
UDS	1BL41	150BOT119	17972	RNR	0.725 g/L
Uranium	1BL41	150BOT119	17920	BCS	1.037E-01 +- 4.7E-03 G/L

End of Report -- 14 results.

CONDENSED OVERHEADS SAMPLES ANALYSIS REPORTS

F I N A L R E P O R T for 150COND122 293

Log Type: ** PLANT **

Report for : NWCF
Mailstop : 5116

Log Number : 01-05061
Phone Number : 6-3226

Date Received : May 06 2001
Time Received : 12:17

Date Approved : May 06 2001
Time Approved : 17:51

GWA charged : 561211296

Reviewed by W. (BILL) STRONG

MSA mR/hr : HOT

Signature _____

Hazard Index : 1E5

Lab QC/QA reviewed by

PCBs >50 ppm : NO

Signature _____

COMMENTS:

Analysis	Lab Spl ID	Field Spl ID	Method	Analyst	Results
AL/F RATIO	1BB04	150COND122/NEOPRENE	11023	BCS	Ratio Not Performed
Acid	1BB04	150COND122/NEOPRENE	57012	RDW	4.67E-01 +- 1.2E-02 Normal Acid
Aluminum	1BB05	150COND122/PLASTIC	87100	BCS	1.08E-03 +- 2.3E-04 MOLAR
Chloride	1BB04	150COND122/NEOPRENE	57171	BCS	1.747E+02 +- 6.5E+00 ug/mL
Flash Point	1BB04	150COND122/NEOPRENE	17985	BCS	NO FLASH @ 60.00 deg C corrected
Fluoride	1BB04	150COND122/NEOPRENE	57093	BCS	Not Detected: MDL=7.757 ug/mL
GROSS BETA	1BB04	150COND122/NEOPRENE	87970	BCS	3.96E+05 +- 2.0E+04 B/Min/ml
Mercury	1BB05	150COND122/PLASTIC	87802	RDW	4.59E+00 +- 4.6E-01 ug/ml
Nitrate	1BB04	150COND122/NEOPRENE	97074	BCS	4.011E-01 +- 4.7E-03 Molar
SpGr	1BB04	150COND122/NEOPRENE	47981	BCS	1.01272E+00 +- 1.0E-04 @ 25/4
Sulfate	1BB04	150COND122/NEOPRENE	97168	BCS	1.47E+01 +- 3.9E+00 ug/ml
TOC	1BB04	150COND122/NEOPRENE	18060	RDW	1.517E+02 +- 9.1E+00 ug/ml
UDS	1BB04	150COND122/NEOPRENE	17972	BCS	No Visible Solids.
Uranium	1BB04	150COND122/NEOPRENE	17920	BCS	< 3.24219E-04 G/L
	1BB04	150COND122/NEOPRENE	17920	BCS	< 3.24219E-04 G/L

End of Report -- 15 results.

F I N A L R E P O R T for 150COND122 294

Log Type: ** PLANT **

Report for : NWCF
Mailstop : 5116

Log Number : 01-05073
Phone Number : 6-3226

Date Received : May 07 2001
Time Received : 17:33

Date Approved : May 08 2001
Time Approved : 11:11

GWA charged : 561211296

Reviewed by CLAYNE GRIGG

MSA mR/hr : 1.0

Signature _____

Hazard Index : 1E5

Lab QC/QA reviewed by

PCBs >50 ppm : NO

Signature _____

COMMENTS:

Analysis	Lab Spl ID	Field Spl ID	Method	Analyst	Results
AL/F RATIO	1BB24	150COND122/NEOPRENE	11023	BGP	Ratio Not Performed
Acid	1BB24	150COND122/NEOPRENE	57012	BGP	4.50E-01 +- 1.2E-02 Normal Acid
Aluminum	1BB25	150COND122/PLASTIC	87100	RAH	< 7.55977E-04 MOLAR
Chloride	1BB24	150COND122/NEOPRENE	57171	BGP	1.72E+02 +- 1.1E+01 ug/mL
Flash Point	1BB24	150COND122/NEOPRENE	17985	BET	NO FLASH @ 60.00 deg C corrected
Fluoride	1BB24	150COND122/NEOPRENE	57093	BGP	Not Detected: MDL=6.982 ug/mL
GROSS BETA	1BB24	150COND122/NEOPRENE	87970	RAH	4.94E+04 +- 2.9E+03 B/Min/ml
Mercury	1BB25	150COND122/PLASTIC	87802	RAH	3.80E+00 +- 2.3E-01 ug/ml
Nitrate	1BB24	150COND122/NEOPRENE	97074	BGP	4.198E-01 +- 4.8E-03 Molar
SpGr	1BB24	150COND122/NEOPRENE	47981	BGP	1.01208E+00 +- 1.0E-04 @ 25/4
Sulfate	1BB24	150COND122/NEOPRENE	97168	BGP	1.15E+01 +- 4.0E+00 ug/ml
TOC	1BB24	150COND122/NEOPRENE	18060	BGP	1.313E+02 +- 9.1E+00 ug/ml
UDS	1BB24	150COND122/NEOPRENE	17972	BGP	No Visible Solids.
Uranium	1BB24	150COND122/NEOPRENE	17920	RAH	< 3.24219E-04 G/L
	1BB24	150COND122/NEOPRENE	17920	RAH	< 3.24219E-04 G/L

End of Report -- 15 results.

F I N A L R E P O R T for 150COND122 295

Log Type: ** PLANT **

Report for : NWCF
Mailstop : 5116

Log Number : 01-05087
Phone Number : 6-3226

Date Received : May 08 2001
Time Received : 14:53

Date Approved : May 09 2001
Time Approved : 02:13

GWA charged : 561211296

Reviewed by BRIAN PASSMORE

MSA mR/hr : HOT

Signature _____

Hazard Index : >1E4

Lab QC/QA reviewed by

PCBs >50 ppm : NO

Signature _____

COMMENTS:

Analysis	Lab Spl ID	Field Spl ID	Method	Analyst	Results
AL/F RATIO	1BB54	150COND122/NEOPRENE	11023	BCS	Ratio Not Performed
Acid	1BB54	150COND122/NEOPRENE	57012	RNR	4.76E-01 +- 1.2E-02 Normal Acid
Aluminum	1BB55	150COND122/PLASTIC	87100	BCS	< 4.20091E-04 MOLAR
Chloride	1BB54	150COND122/NEOPRENE	57171	RNR	1.828E+02 +- 6.6E+00 ug/mL
Flash Point	1BB54	150COND122/NEOPRENE	17985	BET	NO FLASH @ 60.00 deg C corrected
Fluoride	1BB54	150COND122/NEOPRENE	57093	BCS	Not Detected: MDL=6.982 ug/mL
GROSS BETA	1BB54	150COND122/NEOPRENE	87970	RAH	5.01E+03 +- 7.3E+02 B/Min/ml
Mercury	1BB55	150COND122/PLASTIC	87802	RAH	3.73E+00 +- 2.3E-01 ug/ml
Nitrate	1BB54	150COND122/NEOPRENE	97074	RAH	2.049E-02 +- 2.2E-04 Molar
SpGr	1BB54	150COND122/NEOPRENE	47981	BET	1.01314E+00 +- 1.0E-04 @ 25/4
Sulfate	1BB54	150COND122/NEOPRENE	97168	RAH	< 2.86967E+00 ug/ml
TOC	1BB54	150COND122/NEOPRENE	18060	BET	1.286E+02 +- 9.0E+00 ug/ml
UDS	1BB54	150COND122/NEOPRENE	17972	BET	no visible solids
Uranium	1BB54	150COND122/NEOPRENE	17920	BCS	< 3.24219E-04 G/L
	1BB54	150COND122/NEOPRENE	17920	BGP	< 3.24219E-04 G/L

End of Report -- 15 results.

F I N A L R E P O R T for 150COND122 296

Log Type: ** PLANT **

Report for : NWCF
Mailstop : 5116

Log Number : 01-05092
Phone Number : 6-3226

Date Received : May 09 2001
Time Received : 18:47

Date Approved : May 10 2001
Time Approved : 01:06

GWA charged : 561211296

Reviewed by BRIAN PASSMORE

MSA mR/hr : HOT

Signature _____

Hazard Index : >1E4

Lab QC/QA reviewed by

PCBs >50 ppm : NO

Signature _____

COMMENTS:

Analysis	Lab Spl ID	Field Spl ID	Method	Analyst	Results
AL/F RATIO	1BB93	150COND122/NEOPRENE	11023	RAH	Ratio Not Performed
Acid	1BB93	150COND122/NEOPRENE	57012	BGP	4.80E-01 +- 1.2E-02 Normal Acid
Aluminum	1BB94	150COND122/PLASTIC	87100	RAH	< 7.51772E-04 MOLAR
Chloride	1BB93	150COND122/NEOPRENE	57171	BGP	1.86E+02 +- 1.1E+01 ug/mL
Flash Point	1BB93	150COND122/NEOPRENE	17985	BGP	NO FLASH @ 60.00 deg C corrected
Fluoride	1BB93	150COND122/NEOPRENE	57093	BGP	Not Detected: MDL=6.982 ug/mL
GROSS BETA	1BB93	150COND122/NEOPRENE	87970	RAH	3.52E+04 +- 2.2E+03 B/Min/ml
Mercury	1BB94	150COND122/PLASTIC	87802	RAH	2.31E+00 +- 2.3E-01 ug/ml
Nitrate	1BB93	150COND122/NEOPRENE	97074	BGP	4.233E-01 +- 4.7E-03 Molar
SpGr	1BB93	150COND122/NEOPRENE	47981	BGP	1.01307E+00 +- 1.0E-04 @ 25/4
Sulfate	1BB93	150COND122/NEOPRENE	97168	BGP	1.08E+01 +- 4.0E+00 ug/ml
TOC	1BB93	150COND122/NEOPRENE	18060	BGP	1.468E+02 +- 9.1E+00 ug/ml
UDS	1BB93	150COND122/NEOPRENE	17972	BGP	No visible solids.
Uranium	1BB93	150COND122/NEOPRENE	17920	RAH	< 3.24219E-04 G/L
	1BB93	150COND122/NEOPRENE	17920	RAH	< 3.24219E-04 G/L

End of Report -- 15 results.

F I N A L R E P O R T for 150COND122 324

Log Type: ** PLANT **

Report for : NWCF
Mailstop : 5116

Log Number : 01-06145
Phone Number : 6-3226

Date Received : Jun 14 2001
Time Received : 23:07

Date Approved : Jun 17 2001
Time Approved : 14:04

GWA charged : 561211296

Reviewed by W. (BILL) STRONG

MSA mR/hr : HOT

Signature _____

Hazard Index : >1E4

Lab QC/QA reviewed by

PCBs >50 ppm : NO

Signature _____

COMMENTS:

Analysis	Lab Spl ID	Field Spl ID	Method	Analyst	Results
AL/F RATIO	1BK66	150COND122/NEOPRENE	11023	BCS	Ratio Not Performed
Acid	1BK66	150COND122/NEOPRENE	57012	BGP	4.98E-01 +- 1.2E-02 Normal Acid
Aluminum	1BK67	150COND122/PLASTIC	87100	BCS	< 4.20091E-04 MOLAR
Chloride	1BK66	150COND122/NEOPRENE	57171	BGP	1.986E+02 +- 6.8E+00 ug/mL
Flash Point	1BK66	150COND122/NEOPRENE	17985	BCS	NO FLASH @ 60.00 deg C corrected
Fluoride	1BK66	150COND122/NEOPRENE	87092	BCS	Not Detected: MDL=3.504 ug/ml
GROSS BETA	1BK66	150COND122/NEOPRENE	87970	RAH	1.161E+05 +- 6.4E+03 B/Min/ml
Mercury	1BK67	150COND122/PLASTIC	87802	RDW	5.49E+00 +- 2.4E-01 ug/ml
Nitrate	1BK66	150COND122/NEOPRENE	97074	BCS	4.393E-01 +- 7.1E-03 Molar
SpGr	1BK66	150COND122/NEOPRENE	47981	BGP	1.01377E+00 +- 1.0E-04 @ 25/4
Sulfate	1BK66	150COND122/NEOPRENE	97168	RAH	8.0E+00 +- 4.0E+00 ug/ml
TOC	1BK66	150COND122/NEOPRENE	18060	BGP	1.442E+02 +- 9.1E+00 ug/ml
UDS	1BK66	150COND122/NEOPRENE	17972	BCS	No Visible Solids
Uranium	1BK66	150COND122/NEOPRENE	17920	RAH	< 3.24219E-04 G/L
	1BK66	150COND122/NEOPRENE	17920	RAH	< 3.24219E-04 G/L

End of Report -- 15 results.

I N T E R I M R E P O R T for BOPR:NCC-122

Log Type: ** RCRA **

Report for : JD LONG
Mailstop : 5218

Log Number : 01-06221
Phone Number : 6-7552

Date Received : Aug 13 2001
Time Received : 10:53

GWA charged : 561C022AB

MSA mR/hr : HOT

Hazard Index : >1E4

PCBs >50 ppm : NO

COMMENTS: If fail to get a acid result in range then run pH. pH does not need to be RCRA

Analysis	Lab Spl ID	Field Spl ID	Method	Analyst	Results
Acid	1BL29	BP10140101	57012	BGP	5.14E-01 +- 1.2E-02 Normal Acid
Aluminum	1BL29	BP10140101	42900	LAM	1.703E+03 ug/L
Antimony	1BL29	BP10140101	42900	LAM	Not Detected: IDL= 47 ug/L
Arsenic	1BL29	BP10140101	42900	LAM	Not Detected: IDL= 29 ug/L
Barium	1BL29	BP10140101	42900	LAM	9.0E+00 ug/L
Beryllium	1BL29	BP10140101	42900	LAM	Not Detected: IDL= 1 ug/L
Cadmium	1BL29	BP10140101	42900	LAM	Not Detected: IDL= 4 ug/L
Chromium	1BL29	BP10140101	42900	LAM	2.7E+01 ug/L
Cobalt	1BL29	BP10140101	42900	LAM	Not Detected: IDL= 10 ug/L
Copper	1BL29	BP10140101	42900	LAM	Not Detected: IDL= 14 ug/L
Fluoride	1BL29	BP10140101	57093	BET	3.40346E+00 mg/L
Lead	1BL29	BP10140101	42900	LAM	Not Detected: IDL= 63 ug/L
Manganese	1BL29	BP10140101	42900	LAM	1.3E+01 ug/L
Mercury	1BL29	BP10140101	12800	SDN	3950. ug/L
Nickel	1BL29	BP10140101	42900	LAM	3.2E+01 ug/L
SVOA (TOTAL)	1BL29	BP10140101	9270		
Selenium	1BL29	BP10140101	42900	LAM	Not Detected: IDL= 48 ug/L
Silver	1BL29	BP10140101	42900	LAM	Not Detected: IDL= 20 ug/L
TIC	1BL29	BP10140101	18060	RDW	mdl=23.8008 ug/ml
TOC	1BL29	BP10140101	18060	RDW	1.47853E+02 ug/ml
Thallium	1BL29	BP10140101	42900	LAM	Not Detected: IDL= 40 ug/L
UDS	1BL29	BP10140101	17972	RNR	0.0 g/L
Uranium	1BL29	BP10140101	17920	BCS	< 3.24219E-04 G/L
VOA (TOTAL)	1BL29	BP10140101	9260		
	1BL30	BP10140201	9260		
Vanadium	1BL29	BP10140101	42900	LAM	Not Detected: IDL= 10 ug/L
Zinc	1BL29	BP10140101	42900	LAM	5.3E+01 ug/L

End of Report -- 27 results.

F I N A L R E P O R T for 150COND122 335

Log Type: ** PLANT **

Report for : NWCF
Mailstop : 5116

Log Number : 01-06241
Phone Number : 6-3226

Date Received : Jun 24 2001
Time Received : 11:44

Date Approved : Jun 25 2001
Time Approved : 16:38

GWA charged : 561211296

Reviewed by CLAYNE GRIGG

MSA mR/hr : CELL

Signature _____

Hazard Index : 1E5

Lab QC/QA reviewed by

PCBs >50 ppm : NO

Signature _____

COMMENTS:

Analysis	Lab Spl ID	Field Spl ID	Method	Analyst	Results
AL/F RATIO	1BL43	150COND122/NEOPRENE	11023	BCS	Ratio Not Performed
Acid	1BL43	150COND122/NEOPRENE	57012	RDW	4.71E-01 +- 1.2E-02 Normal Acid
Aluminum	1BL44	150COND122/PLASTIC	87100	BCS	< 4.20091E-04 MOLAR
Chloride	1BL43	150COND122/NEOPRENE	57171	RDW	1.91E+02 +- 1.1E+01 ug/mL
Flash Point	1BL43	150COND122/NEOPRENE	17985	BCS	NO FLASH @ 60.00 deg C corrected
Fluoride	1BL43	150COND122/NEOPRENE	87092	BCS	Not Detected: MDL=3.504 ug/ml
GROSS BETA	1BL43	150COND122/NEOPRENE	87970	BCS	6.90E+03 +- 7.9E+02 B/Min/ml
Mercury	1BL44	150COND122/PLASTIC	87802	RDW	3.27E+00 +- 4.6E-01 ug/ml
Nitrate	1BL43	150COND122/NEOPRENE	97074	BCS	4.007E-01 +- 9.0E-03 Molar
SpGr	1BL43	150COND122/NEOPRENE	47981	BCS	1.01299E+00 +- 1.0E-04 @ 25/4
Sulfate	1BL43	150COND122/NEOPRENE	97168	BCS	< 5.63559E+00 ug/ml
TOC	1BL43	150COND122/NEOPRENE	18060	RDW	1.888E+02 +- 9.3E+00 ug/ml
UDS	1BL43	150COND122/NEOPRENE	17972	BCS	No Visible Solids
Uranium	1BL43	150COND122/NEOPRENE	17920	BCS	< 3.24219E-04 G/L
	1BL43	150COND122/NEOPRENE	17920	BCS	< 3.24219E-04 G/L

End of Report -- 15 results.

LAB QUALIFIER LIST

For volatile and semi-volatile organic analytical results, the INEEL qualifiers to be used are as follows:

U Indicates the compound was analyzed for but not detected. The sample quantification limit, or method detection limit (MDL) for EPA Method 524.2 (see Section C, Part I), must be corrected for dilution. For example, 10 U for phenol in water if the sample final volume is the protocol-specified final volume and the method quantification limit for phenol is 10 µg/L. If a 1 to 10 dilution of extract is necessary, the reported limit is 100 U.

If an analyte is detected at a concentration that is less than the MDL, it shall be reported at the estimated quantification limit (EQL) (concentration of the low standard in the initial calibration) and a "U" flag shall be used on the Form I.

J Indicates an estimated value. This flag is used under the following circumstances: 1) either when estimating a concentration for tentatively identified compounds where a 1:1 response is assumed, 2) when the mass spectral data indicate the presence of a compound that meets the identification criteria but the result is less than the sample estimated quantification limit but greater than the method detection limit (MDL), and 3) when the retention time data indicates the presence of a compound that meets the pesticide/polychlorinated bisphenyls (PCBs) identification criteria and the result is less that the EQL but greater than zero. For example, if the sample quantification limit is 10 µg/L, but a concentration of 3 µg/L is calculated, report the result as 3 J. The sample estimated quantification limit must be adjusted for the U flag, so that if a sample with 24% moisture and a 1 to 10 dilution factor has a calculated concentration of 300 µg/kg and a sample quantification limit of 4300 µg/kg, report the concentration as 300 J on Form I. Note: The "J" code is not used and the compound is not reported as being identified for pesticide/PCBs results less than the Contract-Required Quantification Limit (CRQL), if the technical judgement of the pesticide residue analysis expert determines that the peaks used for compound identification resulted from instrument noise or other interferences (column bleed, solvent contamination, etc).

N Indicates presumptive evidence of a compound. This flag is only used for tentatively identified compounds, where the identification is based on a mass spectral library search. The N flag is applicable only to tentatively identified compound results. For generic characterization of a tentatively identified compound, such as chlorinated hydrocarbon, the N code is not used.

B This flag is used when the analyte is found in the associated blank as well as in the sample. It indicates possible/probable blank contamination and warns the data user to take appropriate action. This flag shall be used for a TIC as well as for a positively identified target compound. This flag shall not be used for flagging results on Forms I for the method blank analyses.

E This flag identifies compounds whose concentrations exceed the calibration range of the gas chromatography (GC) or gas chromatography/mass spectrometry (GC/MS) instrument for that specific analysis. If one or more compounds has a response representing a concentration greater than the highest concentration used in the initial calibration of the instrument, the sample or extract shall be diluted and re-analyzed. All such compounds with a response greater than the highest concentration used in the initial calibration shall have the

concentration flagged with an "E" on the Form I for the original analysis. If the dilution of the extract causes any compounds identified in the first analysis to be below the calibration range in the second analysis, then the results of both analyses shall be reported on separate Forms I. The Form I for the diluted sample shall have the "DL" suffix appended to the sample number. NOTE: For total xylenes, where three isomers are quantified as two peaks when using capillary column chromatography, the calibration range of each peak should be considered separately, e.g., a diluted analysis is not required for total xylenes unless the concentration of either peak separately exceeds 200 µg/L.

D This flag identifies all compounds identified in an analysis at a secondary dilution factor. If a sample or extract is re-analyzed at a higher dilution factor, as in the "E" flag above, the "DL" suffix is appended to the sample number on the Form I for the diluted sample, and all concentration and quantification limit values reported on that Form I are flagged with the "D" flag.

A This flag indicates that a TIC is a suspected aldol-condensation product.

S This optional flag indicates that the compound is a matrix spike and thus, the concentration is not reported on Form I.

P This flag is used for a pesticide/PCBs target analyte when there is greater than 25% difference for detected concentrations between the two GC Columns (See Form X). The lower of the two values is reported on the Form I and flagged with a "P".

M This flag indicates that the analyte was quantified using a calibration curve constructed using a first or higher order regression fit as specified in and allowed by SW-846 methods 8260A (paragraph 7.3.6.1) and 8270B (paragraph 7.3.5.1).

H The extraction holding time was exceeded.

X, Y, or Z Other specific flags may be required to properly define the results. If used, they must be fully described and such description attached to the Sample Data Summary Package and the Sample Delivery Group (SDG) Narrative. For the data contained in this report, "Y" indicates that the data is to be used for qualitative purposes only and "Z" indicates that the initial calibration contains one less point than required by the method.

The combination of flags "BU" or "UB" is expressly prohibited. Blank contaminants are flagged "B" only when they are also detected in the sample.

For the analyses, other than volatile and semi-volatile organic compounds the lab qualifiers are as follows:

U Used if the reported value is less than the instrument's detection limit (IDL).

B Used if the reported value is less than ten times the IDL, but is greater than or equal to the IDL.

N Used when spike recovery of either the matrix spike or matrix spike duplicate is not within the limits of 80 – 120%.

E Used when the serial dilution or analytical spike is not within the SOW-156 limits.

APPENDIX D

DCS DATA

Table D-1. Evaporator parameters.

EVAPORATOR PARAMETERS, 0060STRT-1

	Evaporator Parameters														NWCF OFFGAS PARAMETERS														
	T-150-1	T-150-2	T-150-3	T-150-4	T-150-5	T-150-6	T-150-7	T-150-8	T-150-9	T-150-10	ave	D-150-1 evaporator density	L-150-1 evaporator level	F350-1 evaporator steam flow	T-336-1C	F 136-1	P-122-1	P-130-2	PD-130-1-1	PD-130-2-1	PD-130-3-1	PD-130-4-1	PD-130-1	T-335-2	T-130-1-1	T-130-2-1	T-130-3-1	T-130-4-1	F-130-1
Time	degrees C	degrees C	degrees C	degrees C	degrees C	degrees C	degrees C	degrees C	degrees C	degrees C		Grams/ml	Inches	lb/hour	degrees F	scfm	"wcvac	"wcvac	IN WC	IN WC	IN WC	IN WC	IN WC	degrees F	degrees F	degrees F	degrees F	degrees F	scfm
05 JUN 01 09:30:00	70.274	72.117	75.015	75.114	46.441	45.187	36.15	36.742	37.146	37.729	53	1.1875	18.034	-2.387	75.648	170.52	11.581	48.987	0.008	-0.056		0	1.9695	8.1261	183.11	105.49	104.86	98.824	163.65	632.45
05 JUN 01 09:45:00	96.436	96.992	96.509	96.394	47.203	45.97	36.431	37.083	37.547	38.185		1.1867	37.086	-2.169	75.623	170.05	11.582	48.984	0.008	-0.056		0	1.9699	8.1282	183.09	105.49	104.86	98.82	163.64	606.83
05 JUN 01 10:00:00	97.442	98.077	97.413	97.443	69.385	69.732	37.98	38.581	37.948	38.702		1.1858	56.134	-1.95	75.662	169.59	11.583	48.981	0.008	-0.056		0	1.9703	8.1304	183.09	105.49	104.85	98.816	163.64	634.13
05 JUN 01 10:15:00	98.377	99.135	98.247	98.44	89.207	89.009	42.735	43.22	39.106	40.699		1.185	75.182	-1.732	75.701	169.12	11.583	48.978	0.008	-0.056		0	1.9707	8.1326	183.08	105.48	104.85	98.812	163.64	629.7
05 JUN 01 10:30:00	99.023	99.529	99.081	99.175	94.15	93.396	50.974	51.409	45.414	47.101		1.1842	93.734	-1.514	75.74	168.66	11.584	48.974	0.008	-0.056		0	1.9711	8.1348	183.07	105.48	104.84	98.808	163.64	630.73
05 JUN 01 10:45:00	99.273	99.77	99.393	99.433	94.931	94.915	64.089	64.633	58.734	60.355		1.1833	111.05	-1.295	75.779	168.19	11.585	49.971	0.008	-0.056		0	1.9715	8.1369	183.06	105.48	104.83	98.804	163.64	633.6
05 JUN 01 11:00:00	99.524	100.01	99.644	99.691	94.538	95.159	81.304	82.062	77.126	78.993		1.1825	127.73	-1.077	75.818	167.73	11.586	48.968	0.008	-0.056		0	1.9719	8.1391	183.05	105.48	104.83	98.8	163.63	647.47
05 JUN 01 11:15:00	99.775	100.25	99.896	99.949	93.141	93.095	91.544	92.22	90.363	92.638		1.1817	137.23	-0.859	75.857	167.26	11.587	48.965	0.008	-0.056		0	1.9722	8.1413	183.04	105.48	104.82	98.796	163.63	625.8
05 JUN 01 11:30:00	99.987	100.45	100.23	100.4	92.836	92.706	96.146	96.955	96.523	98.08		1.1809	137.12	7.1828	75.896	166.8	11.587	48.961	0.008	-0.056		0	1.9726	8.1435	183.03	105.47	104.82	98.792	163.63	651.66
05 JUN 01 11:45:00	100.19	100.64	100.8	100.9	93.912	93.801	98.103	98.901	98.436	100.03		1.18	137.02	691.63	75.935	166.33	11.588	48.958	0.008	-0.056		0	1.973	8.1456	183.02	105.47	104.81	98.788	163.63	646.97
05 JUN 01 12:00:00	100.39	100.83	101.37	101.39	94.95	94.849	99.334	100.14	99.849	101.2		1.1792	136.91	1125.7	75.975	165.87	11.589	48.955	0.008	-0.056		0	1.9734	8.1478	183.01	105.47	104.8	98.784	163.63	614.2
05 JUN 01 12:15:00	100.59	101.02	101.85	101.89	95.988	95.897	100.04	100.79	100.51	101.77		1.1752	136.81	1652.5	76.014	165.4	11.59	48.952	0.008	-0.056		0	1.9738	8.15	183.00	105.47	104.8	98.78	163.62	627.16
05 JUN 01 12:30:00	100.79	101.22	101.97	102.01	97.025	96.945	99.686	100.38	100.23	101.85	100	1.1675	136.7	1725.5	76.053	164.93	11.591	48.949	0.008	-0.056		0	1.9742	8.1522	182.99	105.47	104.79	98.776	163.62	636.2

EVAPORATOR PARAMETERS, 0060END-1

Time	T-150-1	T-150-2	T-150-3	T-150-4	T-150-5	T-150-6	T-150-7	T-150-8	T-150-9	T-150-10		D-150-1 evaporator density	L-150-1 evaporator level	F350-1 evaporator steam flow	T-336-1C	F 136-1	P-122-1	P-130-2	PD-130-1-1	PD-130-2-1	PD-130-3-1	PD-130-4-1	PD-130-1	T-335-2	T-130-1-1	T-130-2-1	T-130-3-1	T-130-4-1	F-130-1
	degrees C	degrees C	degrees C	degrees C	degrees C	degrees C	degrees C	degrees C	degrees C	degrees C		Grams/ml	Inches	lb/hour	degrees F	scfm	"wcvac	"wcvac	IN WC	IN WC	IN WC	IN WC	IN WC	degrees F	degrees F	degrees F	degrees F	degrees F	scfm
05 JUN 01 16:00:00	103.58	103.92	104.57	103.98	97.792	97.612	101.25	102.32	101.33	102.7	102	1.2091	134.12	1719.5	76.599	158.42	11.602	48.903	0.008	-0.056		0	1.9796	8.1826	182.84	105.44	104.71	98.721	163.59	619.49
05 JUN 01 16:15:00	103.77	104.11	104.72	104.17	98.301	98.126	101.4	102.49	101.61	102.95		1.2129	134.78	1744	76.638	157.95	11.602	48.9	0.008	-0.056		0	1.98	8.1848	182.83	105.44	104.7	98.717	163.59	603.97
05 JUN 01 16:30:00	103.9	104.29	104.87	104.36	98.858	98.641	101.51	102.66	102.01	103.1		1.2167	135.33	1725.4	76.678	157.49	11.603	48.897	0.008	-0.056		0	1.9804	8.1869	182.82	105.43	104.7	98.714	163.59	630.28
05 JUN 01 16:45:00	104.03	104.41	105.01	104.55	99.415	99.155	101.61	102.83	102.41	103.25		1.2205	135.59	1732.1	76.717	157.02	11.604	48.894	0.008	-0.056		0	1.9807	8.1891	182.81	105.43	104.69	98.71	163.59	622.32
05 JUN 01 17:00:00	104.17	104.54	105.16	104.74	99.778	99.555	101.72	103	102.82	103.4		1.2242	135.86	1734.6	76.756	156.56	11.605	48.891	0.008	-0.056		0	1.9811	8.1913	182.8	105.43	104.69	98.706	163.59	627.61
05 JUN 01 17:15:00	104.3	104.67	105.31	104.92	100.06	99.722	101.82	103.12	103.22	103.55		1.228	135.99	1729.7	76.795	156.09	11.606	48.887	0.008	-0.056		0	1.9815	8.1935	182.79	105.43	104.68	98.702	163.58	610.26
05 JUN 01 17:30:00	104.43	104.79	105.46	105.01	100.34	99.889	101.93	103.2	103.62	103.7		1.2318	135.83	1721.3	76.834	155.26	11.606	48.884	0.008	-0.056		0	1.9819	8.1956	182.78	105.43	104.67	98.698	163.58	642.05
05 JUN 01 17:45:00	104.56	104.92	105.61	105.1	100.63	100.06	102.03	103.28	103.64	103.85		1.2356	135.67	1729.2	76.873	154.41	11.607	48.881	0.008	-0.056		0	1.9823	8.1978	182.77	105.43	104.67	98.694	163.58	626.59
05 JUN 01 18:00:00	104.69	105.05	105.76	105.19	101.04	100.22	102.14	103.35	103.23	104		1.2394	135.52	1714.8	76.912	153.55	11.608	48.878	0.008	-0.056		0	1.9827	8.2	182.76	105.42	104.66	98.69	163.58	650.26
05 JUN 01 18:15:00	104.82	105.17	105.83	105.28	101.46	100.39	102.25	103.43	103.06	104.15		1.2431	135.36	1729.4	76.951	152.69	11.609	48.874	0.008	-0.056		0	1.9831	8.2022	182.75	105.42	104.66	98.686	163.58	625.62
05 JUN 01 18:30:00	104.95	105.3	105.81	105.37	101.87	100.74	103.18	103.51	103.68	105.07		1.2469	135.56	1725.5	76.99	151.83	11.61	48.871	0.008	-0.056		0	1.9835	8.2043	182.74	105.42	104.65	98.682	163.57	618.58
05 JUN 01 18:45:00	105.08	105.43	105.8	105.46	102.29	101.12	103.21	103.59	103.72	105.12		1.2507	136.01	1730.3	77.029	150.98	11.61	48.868	0.008	-0.056		0	1.9838	8.2065	182.73	105.42	104.65	98.678	163.57	604.61
05 JUN 01 19:00:00	105.21	105.55	105.78	105.55	102.7	101.5	103.07	103.66	103.57	104.97		1.2545	135.88	1714.2	77.068	150.12	11.611	48.865	0.008	-0.056		0	1.9842	8.2087	182.72	105.42	104.64	98.674	163.57	613.46
05 JUN 01 19:15:00	105.34	105.68	105.77	105.64	103.11	101.88	102.93	103.74	103.42	104.82		1.2583	135.75	1728.1	77.107	149.26	11.612	48.862	0.008	-0.056		0	1.9846	8.2109	182.71	105.41	104.63	98.67	163.57	615.79
05 JUN 01 19:30:00	105.47	105.81	105.75	105.73	103.3	102.69	102.79	103.82	103.27	104.66	104	1.262	135.62	1714.5	77.146	148.4	11.613	48.858	0.008	-0.056		0	1.985	8.213	182.7	105.41	104.63	98.666	163.57	649.86
05 JUN 01 19:45:00	100.64	101.46	101.48	101.16	102.86	103.02	102.65	103.89	103.12	104.51		1.2658	135.49	1726.9	77.185	147.55	11.613	48.855	0.008	-0.056		0	1.9854	8.2152	182.69	105.41	104.62	98.662	163.56	626.28

EVAPORATOR PARAMETERS, 0060STRT-2

Time	T-150-1	T-150-2	T-150-3	T-150-4	T-150-5	T-150-6	T-150-7	T-150-8	T-150-9	T-150-10	D-150-1 evaporator density	L-150-1 evaporator level	F350-1 evaporator steam flow	T-336-1C	F 136-1	P-122-1	P-130-2	PD-130-1-1	PD-130-2-1	PD-130-3-1	PD-130-4-1	PD-130-1	T-335-2	T-130-1-1	T-130-2-1	T-130-3-1	T-130-4-1	F-130-1
	degrees C	degrees C	degrees C	degrees C	degrees C	degrees C	degrees C	degrees C	degrees C	degrees C	Grams/ml	Inches	lb/hour	degrees F	scfm	"wcvac	"wcvac	IN WC	IN WC	IN WC	IN WC	IN WC	degrees F	degrees F	degrees F	degrees F	degrees F	scfm
06 JUN 01 07:15:00	61.829	63.465	69.791	70.188	43.909	43.728	36.42	37.092	37.571	38.548	1.1902	136.57	0.969	76.543	168.77	11.553	48.707	0.008	-0.056		0	2.0576	8.3564	183.03	104.61	104.43	97.829	163.41	611.81
06 JUN 01 07:30:00	61.688	62.775	70.231	70.523	44.131	43.903	36.469	37.142	37.769	38.676	1.1896	136.52	-0.588	76.558	169	11.551	48.704	0.008	-0.056		0	2.0575	8.3562	183.03	104.61	104.43	97.833	163.41	635.14
06 JUN 01 07:45:00	62.838	63.93	71.572	71.408	44.353	44.078	36.519	37.191	38.006	38.943	1.1891	136.46	-0.208	76.572	169.24	11.549	48.7	0.008	-0.056		0	2.0574	8.356	183.02	104.61	104.43	97.836	163.41	639.53
06 JUN 01 08:00:00	96.666	97.526	97.21	96.776	44.575	44.445	36.568	37.241	38.243	39.21	1.1885	136.4	3.6601	76.586	169.47	11.548	48.7	0.008	-0.056		0	2.0573	8.3559	183.02	104.62	104.44	97.84	163.4	650.84
06 JUN 01 08:15:00	97.881	98.537	98.028	98.157	59.743	59.993	37.463	38.102	38.48	39.477	1.188	136.35	446.62	76.6	169.71	11.546	48.7	0.008	-0.056		0	2.0572	8.3557	183.02	104.62	104.44	97.844	163.4	666.56
06 JUN 01 08:30:00	98.485	99.254	98.592	99.204	82.048	82.078	40.546	41.242	38.718	39.745	1.1875	136.33	871.3	76.614	169.94	11.544	48.7	0.008	-0.056		0	2.0571	8.3556	183.01	104.62	104.45	97.848	163.4	633.06
06 JUN 01 08:45:00	99.041	99.972	99.156	99.457	93.676	92.752	47.382	47.542	41.907	43.421	1.1793	136.66	1335.8	76.629	170.18	11.543	48.7	0.008	-0.056		0	2.0569	8.3554	183.01	104.62	104.45	97.851	163.4	615.81
06 JUN 01 09:00:00	99.559	100.3	99.72	99.71	96.311	95.872	57.503	58.15	51.775	53.565	1.1735	136.42	1736.2	76.643	170.42	11.541	48.7	0.008	-0.056		0	2.0568	8.3553	183	104.62	104.45	97.855	163.39	637.62
06 JUN 01 09:15:00	99.893	100.55	100.18	99.964	95.898	95.598	73.257	73.735	67.856	69.073	1.1683	136.06	1735.3	76.657	170.65	11.539	48.7	0.008	-0.056		0	2.0567	8.3551	183	104.62	104.46	97.859	163.39	642.69
06 JUN 01 09:30:00	100.23	100.81	100.59	100.35	95.484	95.176	88.924	89.958	85.873	88.072	1.1631	135.7	1721.4	76.671	170.89	11.537	48.7	0.008	-0.056		0	2.0566	8.355	182.99	104.62	104.46	97.863	163.39	643.56
06 JUN 01 09:45:00	100.56	101.05	101	100.86	93.178	94.227	94.626	96.075	94.927	96.641	1.1628	132.97	1724.7	76.685	171.12	11.536	48.7	0.008	-0.056		0	2.0565	8.3548	182.99	104.62	104.46	97.866	163.39	652.44
06 JUN 01 10:00:00	100.89	101.26	101.41	101.36	94.269	94.711	98.045	98.89	98.442	99.804	1.1668	129.4	1731	76.699	171.36	11.534	48.7	0.008	-0.056		0	2.0564	8.3547	182.99	104.63	104.47	97.87	163.38	662.49
06 JUN 01 10:15:00	101.14	101.47	101.82	101.87	95.972	95.819	99.561	100.39	100.08	101.31	1.1714	125.45	1726.2	76.714	171.59	11.532	48.7	0.008	-0.056		0	2.0563	8.3545	182.98	104.63	104.47	97.874	163.38	644.66
06 JUN 01 10:30:00	101.35	101.68	102.23	102.16	97.357	97.109	100.54	101.16	100.93	102.19	1.1781	121.13	1725.9	76.728	171.83	11.531	48.7	0.008	-0.056		0	2.0562	8.3544	182.98	104.63	104.48	97.878	163.38	620.82
06 JUN 01 10:45:00	101.56	101.89	102.43	102.37	98.629	98.262	101.01	101.52	100.71	102.8	1.1848	116.85	1724.8	76.742	172.06	11.529	48.7	0.008	-0.056		0	2.0561	8.3542	182.97	104.63	104.48	97.881	163.38	630.82
06 JUN 01 11:00:00	101.77	102.1	102.56	102.58	98.601	98.668	101.05	100.93	100.25	102.24	1.1916	113.01	1730	76.756	172.3	11.527	48.7	0.008	-0.056		0	2.056	8.354	182.97	104.63	104.48	97.885	163.37	664.12
06 JUN 01 11:15:00	101.98	102.31	102.69	102.77	95.504	95.169	97.614	98.603	98.546	99.762	1.1963	123.25	1724.7	76.77	172.53	11.525	48.7	0.008	-0.056		0	2.0559	8.3539	182.97	104.63	104.49	97.889	163.37	634.06
06 JUN 01 11:30:00	102.19	102.52	102.82	102.94	94.835	95.309	98.235	99.465	99.119	100.27	1.1994	124.3	1725.3	76.785	172.77	11.524	48.7	0.008	-0.056		0	2.0558	8.3537	182.96	104.63	104.49	97.893	163.37	656.65
06 JUN 01 11:45:00	102.4	102.73	102.94	103.12	94.85	95.45	98.661	99.799	99.472	100.59	1.2025	125.62	1728.1	76.799	173	11.522	48.7	0.008	-0.056		0	2.0557	8.3536		104.63	104.49	97.897	163.37	664.84

EVAPORATOR PARAMETERS, 0060END-2

Time	T-150-1	T-150-2	T-150-3	T-150-4	T-150-5	T-150-6	T-150-7	T-150-8	T-150-9	T-150-10	D-150-1 evaporator density	L-150-1 evaporator level	F350-1 evaporator steam flow	T-336-1C	F 136-1	P-122-1	P-130-2	PD-130-1-1	PD-130-2-1	PD-130-3-1	PD-130-4-1	PD-130-1	T-335-2	T-130-1-1	T-130-2-1	T-130-3-1	T-130-4-1	F-130-1
	degrees C	degrees C	degrees C	degrees C	degrees C	degrees C	degrees C	degrees C	degrees C	degrees C	Grams/ml	Inches	lb/hour	degrees F	scfm	"wcvac	"wcvac	IN WC	IN WC	IN WC	IN WC	IN WC	degrees F	degrees F	degrees F	degrees F	degrees F	scfm
06 JUN 01 15:00:00	104.59	105.44	105.51	105.41	99.217	98.681	102.98	103.27	103.11	104.13	1.2536	128.9	1732.2	76.983	176.06	11.5	48.7	0.008	-0.056		0	2.0544	8.3516	182.91	104.65	104.54	97.945	163.33	661.48
06 JUN 01 15:15:00	104.76	105.54	105.63	105.59	99.421	98.844	103.12	103.53	103.33	104.4	1.257	129.23	1725.5	76.997	176.3	11.498	48.7	0.008	-0.056		0	2.0543	8.3514	182.9	104.65	104.55	97.949	163.33	641.36
06 JUN 01 15:30:00	104.92	105.65	105.67	105.77	99.626	99.007	103.27	103.79	103.49	104.67	1.2604	129.47	1716.1	77.011	176.54	11.496	48.7	0.008	-0.056		0	2.0542	8.3513	182.9	104.65	104.55	97.953	163.33	620.13
06 JUN 01 15:45:00	105.09	105.76	105.67	105.94	99.83	99.17	103.41	104.04	103.66	104.93	1.2638	129.67	1722.5	77.026	176.77	11.495	48.7	0.008	-0.056		0	2.0541	8.3511	182.9	104.65	104.55	97.957	163.33	660.25
06 JUN 01 16:00:00	105.25	105.87	105.67	106.12	100.04	99.333	103.55	104.3	103.83	105.2	1.2672	129.86	1724.8	77.04	177.01	11.493	48.7	0.008	-0.056		0	2.054	8.351	182.89	104.66	104.56	97.96	163.32	667.6
06 JUN 01 16:15:00	105.42	105.98	105.67	106.29	100.24	99.497	103.69	104.56	103.99	105.47	1.2706	130.06	1726.5	77.054	177.24	11.491	48.7	0.008	-0.056		0	2.0539	8.3508	182.89	104.66	104.56	97.964	163.32	649.2
06 JUN 01 16:30:00	105.58	106.09	105.67	106.47	100.44	99.66	103.73	104.82	104.16	105.74	1.274	130.25	1727.6	77.068	177.48	11.49	48.7	0.008	-0.056		0	2.0538	8.3507	182.88	104.66	104.57	97.968	163.32	652.49
06 JUN 01 16:45:00	105.75	106.19	105.67	106.65	100.65	99.823	103.71	104.95	104.32	106.01	1.2775	130.43	1733.7	77.082	177.71	11.488	48.7	0.008	-0.056		0	2.0537	8.3505	182.88	104.66	104.57	97.972	163.32	642.31
06 JUN 01 17:00:00	105.91	106.3	105.67	106.82	100.85	99.986	103.68	104.79	104.49	106.27	1.2809	130.03	1731.7	77.097	177.95	11.486	48.7	0.008	-0.056		0	2.0536	8.3504	182.88	104.66	104.57	97.975	163.31	656.42
06 JUN 01 17:15:00	106.08	106.41	105.67	107	101.06	100.15	103.65	104.62	104.65	106.54	1.2843	129.64	380.21	77.111	178.18	11.484	48.7	0.008	-0.056		0	2.0535	8.3502	182.87	104.66	104.58	97.979	163.31	626.64
06 JUN 01 17:30:00	101.12	101.87	102	101.54	100.8	100.31	103.62	104.46	104.53	106.04	1.2877	129.31	-9.053	77.125	178.42	11.483	48.7	0.008	-0.056		0	2.0534	8.3501	182.87	104.66	104.58	97.983	163.31	668.24
06 JUN 01 17:45:00	99.677	100.23	100.5	99.811	100.48	99.884	103.59	104.29	104.01	105.32	1.2911	128.98	-8.939	77.139	178.65	11.481	48.7	0.008	-0.056		0	2.0533	8.3499	182.86	104.66	104.58	97.987	163.31	634.91
06 JUN 01 18:00:00	97.996	99.212	99.361	98.171	100.15	99.339	103.29	104.13	103.32	104.49	1.2938	128.65	-8.824	77.153	178.89	11.479	48.7	0.008	-0.056		0	2.0532	8.3497	182.86	104.67	104.59	97.99	163.3	658.67

Table D-1. Evaporator parameters.

EVAPORATOR PARAMETERS, 0050STRT-1

Time	T-150-1	T-150-2	T-150-3	T-150-4	T-150-5	T-150-6	T-150-7	T-150-8	T-150-9	T-150-10	D-150-1 evaporator density	L-150-1 evaporator level	F350-1 evaporator steam flow	T-336-1C	F 136-1	P-122-1	P-130-2	PD-130-1-1	PD-130-2-1	PD-130-3-1	PD-130-4-1	PD-130-1	T-335-2	T-130-1-1	T-130-2-1	T-130-3-1	T-130-4-1	F-130-1
	degrees C	degrees C	degrees C	degrees C	degrees C	degrees C	degrees C	degrees C	degrees C	degrees C	Grams/ml	Inches	lb/hour	degrees F	scfm	"wcvac	"wcvac	IN WC	IN WC	IN WC	IN WC	IN WC	degrees F	degrees F	degrees F	degrees F	degrees F	scfm
07 JUN 01 08:00:00	96.912	97.913	96.931	96.902	8.512	48.563	41.697	42.07	41.993	42.81	1.1742	136.8	4.2814	77.948	171.82	11.384	48.689	0.008	-0.056	0	2.0474	8.3412	182.63	104.74	104.8	98.201	163.16	655.98
07 JUN 01 08:15:00	97.748	98.768	98.67	97.801	72.472	72.726	42.467	43.437	42.053	42.887	1.1737	136.74	678.65	77.962	170.91	11.382	48.69	0.008	-0.056	0	2.0473	8.341	182.63	104.74	104.8	98.204	163.16	676.63
07 JUN 01 08:30:00	98.444	99.431	99.194	98.593	92.052	91.247	47.424	48.118	43.667	45.39	1.1732	136.67	1095.9	77.976	170	11.38	48.692	0.008	-0.056	0	2.0472	8.3408	182.62	104.74	104.81	98.208	163.16	668.63
07 JUN 01 08:45:00	99.139	99.984	99.643	99.386	95.398	94.804	55.84	56.547	50.83	52.693	1.1716	136.68	1522.7	77.99	169.09	11.379	48.693	0.008	-0.056	0	2.0471	8.3407	182.62	104.74	104.81	98.212	163.16	629.8
07 JUN 01 09:00:00	99.561	100.23	99.876	99.768	95.943	96.118	69.314	70.263	65.202	66.09	1.1606	137.23	1715.6	78.004	168.17	11.377	48.695	0.008	-0.056	0	2.047	8.3405	182.61	104.74	104.81	98.216	163.15	663.7
07 JUN 01 09:15:00	99.876	100.49	100.11	100.08	95.462	95.791	86.41	87.072	82.498	84.708	1.1542	136.81	1723.3	78.018	167.26	11.375	48.696	0.008	-0.056	0	2.0469	8.3404	182.61	104.74	104.82	98.219	163.15	626.7
07 JUN 01 09:30:00	100.19	100.74	100.34	100.39	93.773	93.773	93.33	94.365	93.391	95.257	1.1574	134.05	1736	78.033	166.35	11.373	48.698	0.008	-0.056	0	2.0468	8.3402	182.61	104.74	104.82	98.223	163.15	656.16
07 JUN 01 09:45:00	100.43	100.94	100.56	100.63	93.728	93.629	97.255	98.067	97.605	98.99	1.1634	130.55	1729.2	78.047	165.44	11.372	48.699	0.008	-0.056	0	2.0467	8.3401	182.6	104.74	104.82	98.227	163.15	652.55
07 JUN 01 10:00:00	100.64	101.12	100.75	100.85	94.819	94.618	98.815	99.615	99.357	100.69	1.1674	126.72	1729.6	78.061	164.54	11.37	48.701	0.008	-0.056	0	2.0466	8.3399	182.6	104.75	104.83	98.231	163.14	628.17
07 JUN 01 10:15:00	100.85	101.3	100.94	101.07	95.901	95.575	99.789	100.57	100.39	101.61	1.1716	122.42	1730	78.075	163.63	11.368	48.702	0.008	-0.056	0	2.0465	8.3398	182.59	104.75	104.83	98.234	163.14	651.21
07 JUN 01 10:30:00	101.07	101.48	101.14	101.3	96.983	96.531	100.34	101.23	100.29	102.09	1.1758	118.31	1730	78.089	162.72	11.367	48.704	0.008	-0.056	0	2.0464	8.3396	182.59	104.75	104.84	98.238	163.14	619.94
07 JUN 01 10:45:00	101.28	101.66	101.33	101.53	98.065	97.488	99.844	100.63	99.932	102.49	1.1798	114.36	1732.5	78.103	161.81	11.365	48.706	0.008	-0.056	0	2.0463	8.3394	182.59	104.75	104.84	98.242	163.13	641.03
07 JUN 01 11:00:00	101.5	101.84	101.52	101.75	96.221	96.156	97.425	98.163	97.966	99.678	1.1837	122.13	1730.6	78.117	161.61	11.363	48.707	0.008	-0.056	0	2.0462	8.3393	182.58	104.75	104.84	98.246	163.13	645.22

EVAPORATOR PARAMETERS, 0050END-1

Time	T-150-1	T-150-2	T-150-3	T-150-4	T-150-5	T-150-6	T-150-7	T-150-8	T-150-9	T-150-10	D-150-1 evaporator density	L-150-1 evaporator level	F350-1 evaporator steam flow	T-336-1C	F 136-1	P-122-1	P-130-2	PD-130-1-1	PD-130-2-1	PD-130-3-1	PD-130-4-1	PD-130-1	T-335-2	T-130-1-1	T-130-2-1	T-130-3-1	T-130-4-1	F-130-1
	degrees C	degrees C	degrees C	degrees C	degrees C	degrees C	degrees C	degrees C	degrees C	degrees C	Grams/ml	Inches	lb/hour	degrees F	scfm	"wcvac	"wcvac	IN WC	IN WC	IN WC	IN WC	IN WC	degrees F	degrees F	degrees F	degrees F	degrees F	scfm
07 JUN 01 14:00:00	103.3	103.84	103.83	103.67	97.056	96.842	100.55	101.38	100.95	102.44	1.23	132.43	1731.7	78.288	163.34	11.343	48.725	0.008	-0.056	0	2.045	8.3375	182.53	104.77	104.89	98.291	163.1	617.59
07 JUN 01 14:15:00	103.42	103.96	104.02	103.79	97.658	97.443	100.92	101.72	101.21	102.67	1.2339	133.71	1731.9	78.302	163.49	11.341	48.727	0.008	-0.056	0	2.0449	8.3373	182.53	104.77	104.89	98.294	163.1	668.63
07 JUN 01 14:30:00	103.55	104.09	104.22	103.94	98.181	97.973	101.3	102.07	101.64	103.12	1.2377	134.6	1736.1	78.316	163.63	11.339	48.729	0.008	-0.056	0	2.0448	8.3371	182.52	104.77	104.9	98.298	163.1	637.74
07 JUN 01 14:45:00	103.62	104.22	104.41	104.12	98.705	98.504	101.67	102.42	102.07	103.56	1.2416	134.9	1725.1	78.33	163.77	11.338	48.73	0.008	-0.056	0	2.0447	8.337	182.52	104.77	104.9	98.302	163.09	640.39
07 JUN 01 15:00:00	103.68	104.34	104.6	104.3	99.228	99.034	101.92	102.61	102.35	103.86	1.2454	133.81	1732.4	78.344	163.92	11.336	48.732	0.008	-0.056	0	2.0446	8.3368	182.52	104.77	104.9	98.306	163.09	645.49
07 JUN 01 15:15:00	103.74	104.47	104.79	104.48	99.751	99.52	102.08	102.76	102.53	104.05	1.2493	132.47	1745.4	78.358	164.06	11.334	48.733	0.008	-0.056	0	2.0445	8.3367	182.51	104.77	104.91	98.31	163.09	644.63
07 JUN 01 15:30:00	103.79	104.6	104.99	104.65	99.984	99.689	102.23	102.91	102.7	104.24	1.2531	131.81	1726.2	78.373	164.21	11.333	48.735	0.008	-0.056	0	2.0444	8.3365	182.51	104.77	104.91	98.313	163.09	616.02
07 JUN 01 15:45:00	103.85	104.72	105.18	104.83	100.16	99.857	102.39	103.06	102.88	104.43	1.257	132.18	1728.6	78.387	164.35	11.331	48.736	0.008	-0.056	0	2.0442	8.3364	182.5	104.77	104.91	98.317	163.08	623.87
07 JUN 01 16:00:00	103.91	104.85	105.29	105.01	100.34	100.03	102.51	103.21	102.95	104.54	1.2609	133.08	1730.2	78.401	164.5	11.329	48.738	0.008	-0.056	0	2.0441	8.3362	182.5	104.78	104.92	98.321	163.08	631.34
07 JUN 01 16:15:00	103.96	104.98	105.36	105.18	100.52	100.19	102.53	103.26	103	104.59	1.2647	134.24	1709	78.415	164.64	11.327	48.739	0.008	-0.056	0	2.044	8.3361	182.5	104.78	104.92	98.325	163.08	654.16
07 JUN 01 16:30:00	104.02	105.1	105.42	105.36	100.7	100.36	102.55	103.27	103.04	104.65	1.2686	135.06	1725.9	78.429	164.78	11.326	48.741	0.008	-0.056	0	2.0439	8.3359	182.49	104.78	104.93	98.328	163.08	635.04
07 JUN 01 16:45:00	104.07	105.23	105.49	105.54	101.05	100.68	102.58	103.28	103.08	104.71	1.2724	134.52	1729.7	78.444	164.93	11.324	48.742	0.008	-0.056	0	2.0438	8.3358	182.49	104.78	104.93	98.332	163.07	643.47
07 JUN 01 17:00:00	104.13	105.36	105.56	105.72	101.47	101.08	102.6	103.3	103.13	104.77	1.2763	134.84	1727.4	78.458	165.07	11.322	48.744	0.008	-0.056	0	2.0437	8.3356	182.48	104.78	104.93	98.336	163.07	644.53
07 JUN 01 17:15:00	104.19	105.48	105.62	105.89	101.88	101.47	102.62	103.31	103.17	104.83	1.2802	135.36	1723.2	78.472	165.22	11.321	48.745	0.008	-0.056	0	2.0436	8.3355	182.48	104.78	104.94	98.34	163.07	651.51

EVAPORATOR PARAMETERS, 0050STRT-2

Time	T-150-1	T-150-2	T-150-3	T-150-4	T-150-5	T-150-6	T-150-7	T-150-8	T-150-9	T-150-10	D-150-1 evaporator density	L-150-1 evaporator level	F350-1 evaporator steam flow	T-336-1C	F 136-1	P-122-1	P-130-2	PD-130-1-1	PD-130-2-1	PD-130-3-1	PD-130-4-1	PD-130-1	T-335-2	T-130-1-1	T-130-2-1	T-130-3-1	T-130-4-1	F-130-1
	degrees C	degrees C	degrees C	degrees C	degrees C	degrees C	degrees C	degrees C	degrees C	degrees C	Grams/ml	Inches	lb/hour	degrees F	scfm	"wcvac	"wcvac	IN WC	IN WC	IN WC	IN WC	IN WC	degrees F	degrees F	degrees F	degrees F	degrees F	scfm
11 JUN 01 07:15:00	69.962	71.629	72.958	73.277	45.649	44.603	41.619	41.541	41.857	42.859	1.1754	137.02	-2.732	74.848	156.42 11	8.0286	48.7	0.008	-0.056	0	2.0152	8.4546	183.33	105.66	105.56	98.865	162.98	635.69
11 JUN 01 07:30:00	67.499	69.081	70.876	71.367	45.126	44.854	41.663	41.587	41.897	42.899	1.175	136.99	-2.66	74.825	156.5	8.0294	48.7	0.008	-0.056	0	2.0151	8.4571	183.33	105.65	105.56	98.866	162.97	614.51
11 JUN 01 08:00:00	63.843	65.437	68.129	68.417	45.729	45.355	41.75	41.681	41.977	42.98	1.1742	136.94	-2.514	74.78	156.65	8.0309	48.7	0.008	-0.056	0	2.015	8.4622	183.33	105.65	105.56	98.869	162.96	601.31
11 JUN 01 08:15:00	97.019	97.79	97.328	97.059	50.646	51.182	41.793	41.727	42.017	43.02	1.1737	136.92	4.5011	74.757	156.73	8.0317	48.7	0.008	-0.056	0	2.015	8.4647	183.32	105.65	105.56	98.87	162.95	652.47
11 JUN 01 08:30:00	97.852	98.832	98.004	98.247	81.727	81.871	42.292	42.943	42.057	43.06	1.1733	136.89	434.46	74.735	156.8	8.0325	48.7	0.008	-0.056	0	2.015	8.4673	183.32	105.65	105.56	98.871	162.94	634.15
11 JUN 01 08:45:00	94.106	95.214	94.831	94.656	83.274	82.282	47.058	47.149	42.285	43.323	1.1729	136.87	-11.47	74.712	156.88	8.0333	48.7	0.008	-0.056	0	2.0149	8.4698	183.32	105.65	105.56	98.873	162.94	627.71
11 JUN 01 09:00:00	93.396	93.392	92.62	92.682	70.97	68.946	50.947	51.152	42.861	43.894	1.1725	136.84	-10.86	74.689	156.77	11.451	48.7	0.008	-0.056	0	2.0149	8.4666	183.32	105.65	105.56	98.874	162.93	661.54
11 JUN 01 09:15:00	98.239	98.739	98.249	98.403	89.366	88.584	52.842	53.489	49.053	50.57	1.1711	136.82	1556.5	74.71	156.64	11.448	48.7	0.008	-0.056	0	2.0148	8.4628	183.32	105.65	105.56	98.875	162.92	616.68
11 JUN 01 09:30:00	98.618	99.22	98.711	99.065	96.187	95.903	62.168	62.969	57.829	59.538	1.1643	137.05	1722.1	74.765	156.51	11.445	48.7	0.008	-0.056	0	2.0148	8.4591	183.32	105.64	105.56	98.876	162.92	647.07
11 JUN 01 09:45:00	98.997	99.63	99.125	99.368	95.804	95.465	78.357	79.12	73.355	74.991	1.1607	137.39	1722.3	74.82	156.39	11.442	48.7	0.008	-0.056	0	2.0147	8.4554	183.31	105.64	105.56	98.878	162.91	652.51
11 JUN 01 10:00:00	99.281	99.94	99.459	99.672	95.347	95.028	90.481	91.678	89.382	91.101	1.1582	136.35	1733.4	74.875	156.26	11.439	48.7	0.008	-0.056	0	2.0147	8.4517	183.31	105.64	105.56	98.879	162.91	608.78
11 JUN 01 10:15:00	99.537	100.25	99.792	99.932	92.993	92.831	95.004	96.428	95.776	97.397	1.159	132.79	1730.3	74.929	156.13	11.436	48.7	0.008	-0.056	0	2.0147	8.448	183.31	105.64	105.56	98.88	162.9	638.46
11 JUN 01 10:30:00	99.794	100.56	100.13	100.14	94.065	93.821	97.689	98.53	98.058	99.511	1.1633	128.99	1734.7	74.984	156	11.433	48.7	0.008	-0.056	0	2.0146	8.4442	183.31	105.64	105.56	98.881	162.89	643.52
11 JUN 01 10:45:00	100.05	100.87	100.46	100.35	94.977	94.642	98.745	99.671	99.411	100.6	1.1675	125.09	1730.5	75.039	155.87	11.431	48.7	0.008	-0.056	0	2.0146	8.4405	183.31	105.64	105.56	98.883	162.89	613.6
11 JUN 01 11:00:00	100.31	101.17	100.79	100.56	95.889	95.463	99.371	100.31	100.01	101.25	1.1715	120.8	1731	75.094	155.75	11.428	48.7	0.008	-0.056	0	2.0145	8.4368	183.31	105.64	105.56	98.884	162.88	626.29
11 JUN 01 11:15:00	100.56	101.31	101.13	100.77	96.801	96.284	99.994	100.82	100.11	101.72	1.1755	116.68	1718	75.149	155.62	11.425	48.7	0.008	-0.056	0	2.0145	8.4331	183.3	105.64	105.56	98.885	162.87	640.44
11 JUN 01 11:30:00	100.82	101.45	101.46	100.98	97.713	97.104	99.347	100.02	99.637	101.25	1.1794	113.27	1713.3	75.204	155.49	11.422	48.7	0.008	-0.056	0	2.0145	8.4294	183.3	105.63	105.56	98.887	162.87	624.31
11 JUN 01 11:45:00	101.07	101.59	101.67	101.19	94.604	94.091	97.007	97.942	97.735	98.961	1.1834	123.08	1731	75.259	155.36	11.419	48.7	0.008	-0.056	0	2.0144	8.4256	183.3	105.63	105.56	98.888	162.86	627.7

EVAPORATOR PARAMETERS, 0050END-2

Time	T-150-1	T-150-2	T-150-3	T-150-4	T-150-5	T-150-6	T-150-7	T-150-8	T-150-9	T-150-10	D-150-1 evaporator density	L-150-1 evaporator level	F350-1 evaporator steam flow	T-336-1C	F 136-1	P-122-1	P-130-2	PD-130-1-1	PD-130-2-1	PD-130-3-1	PD-130-4-1	PD-130-1	T-335-2	T-130-1-1	T-130-2-1	T-130-3-1	T-130-4-1	F-130-1
	degrees C	degrees C	degrees C	degrees C	degrees C	degrees C	degrees C	degrees C	degrees C	degrees C	Grams/ml	Inches	lb/hour	degrees F	scfm	"wcvac	"wcvac	IN WC	IN WC	IN WC	IN WC	IN WC	degrees F	degrees F	degrees F	degrees F	degrees F	scfm
11 JUN 01 15:00:00	102.78	103.02	104.04	103.48	97.869	97.657	100.07	101.68	101.4	102.8	1.235	33.55	1738.9	75.972	153.7	11.38	48.7	0.008	-0.056	0	2.0139	8.3773	183.28	105.62	105.56	98.904	162.78	628.93
11 JUN 01 15:15:00	102.87	103.12	104.26	103.64	98.17	97.938	100.26	101.96	101.62	103.01	1.239	133.21	1732.2	76.027	153.57	11.377	48.7	0.008	-0.056	0	2.0138	8.3736	183.28	105.61	105.56	98.906	162.77	601.71
11 JUN 01 15:30:00	102.96	103.22	104.48	103.8	98.47	98.04	100.46	102.24	101.84	103.23	1.243	132.65	1727.5	76.082	153.44	11.374	48.7	0.008	-0.056	0	2.0138	8.3699	183.27	105.61	105.56	98.907	162.77	616.99
11 JUN 01 15:45:00	103.06	103.32	104.71	103.96	98.659	98.142	100.65	102.52	102.06	103.44	1.2469	132.01	1728.8	76.137	153.32	11.371	48.7	0.008	-0.056	0	2.0137	8.3662	183.27	105.61	105.56	98.908	162.76	611.97
11 JUN 01 16:00:00	103.15	103.42	104.92	104.12	98.78	98.245	100.84	102.72	102.28	103.65	1.2509	130.75	1726.9	76.192	153.19	11.368	48.7	0.008	-0.056	0	2.0137	8.3624	183.27	105.61	105.56	98.909	162.75	628.77
11 JUN 01 16:15:00	103.24	103.52	105.02	104.28	98.902	98.347	101.04	102.83	102.5	103.87	1.2549	129.79	1735.3	76.247	153.06	11.365	48.7	0.008	-0.056	0	2.0137	8.3587	183.27	105.61	105.56	98.911	162.75	620.8
11 JUN 01 16:30:00	103.34	103.62	105.12	104.44	99.024	98.449	101.23	102.94	102.61	104.08	1.2588	129.29	1724.9	76.302	152.93	11.362	48.7	0.008	-0.056	0	2.0136	8.355	183.27	105.61	105.56	98.912	162.74	625.07
11 JUN 01 16:45:00	103.43	103.72	105.22	104.6	99.145	98.552	101.42	103.05	102.37	103.99	1.2628	129.8	1720.2	76.356	152.8	11.359	48.7	0.008	-0.056	0	2.0136	8.3513	183.27	105.61	105.56	98.913	162.73	612.83
11 JUN 01 17:00:00	103.52	103.82	105.32	104.76	99.267	98.654	101.62	103.15	102.13	103.68	1.2668	131.13	1729.2	76.411	152.68	11.356	48.7	0.008	-0.056	0	2.0135	8.3476	183.26	105.61	105.56	98.915	162.73	624.15
11 JUN 01 17:15:00	103.62	103.92	105.42	104.92	99.388	98.756	101.77	103.26	101.88	103.38	1.2707	133.32	1731.6	76.466	152.55	11.353	48.7	0.008	-0.056	0	2.0135	8.3438	183.26	105.6	105.56	98.916	162.72	648.47
11 JUN 01 17:30:00	103.71	104.02	105.52	104.9	99.546	98.974	101.83	103.37	102.03	103.63	1.2747	134.76	1727.6	76.521	152.42	11.35	48.7	0.008	-0.056	0	2.0135	8.3401	183.26	105.6	105.56	98.917	162.71	654.52
11 JUN 01 17:45:00	103.81	104.12	105.62	104.7	100.12	99.543	101.89	103.48	102.63	104.14	1.2787	134.71	1725.7	76.576	152.29	11.347	48.7	0.008	-0.056	0	2.0134	8.3364	183.26	105.6	105.56	98.918	162.71	597.32
11 JUN 01 18:00:00	103.9	104.22	105.71	104.49	100.7	99.957	101.95	103.57	102.52	103.98	1.2827	134.65	1724.1	76.631	152.16	11.345	48.7	0.008	-0.056	0	2.0134	8.3327	183.26	105.6	105.56	98.92	162.7	663.53

Table D-1. Evaporator parameters.

EVAPORATOR PARAMETERS, 0010STRT-1

Time	T-150-1	T-150-2	T-150-3	T-150-4	T-150-5	T-150-6	T-150-7	T-150-8	T-150-9	T-150-10	D-150-1 evaporator density	L-150-1 evaporator level	F350-1 evaporator steam flow	T-336-1C	F 136-1	P-122-1	P-130-2	PD-130-1-1	PD-130-2-1	PD-130-3-1	PD-130-4-1	PD-130-1	T-335-2	T-130-1-1	T-130-2-1	T-130-3-1	T-130-4-1	F-130-1
	degrees C	degrees C	degrees C	degrees C	degrees C	degrees C	degrees C	degrees C	degrees C	degrees C	Grams/ml	Inches	lb/hour	degrees F	scfm	"wcvac	"wcvac	IN WC	IN WC	IN WC	IN WC	IN WC	degrees F	degrees F	degrees F	degrees F	degrees F	scfm
18 JUN 01 08:30:00	59.957	60.965	66.25	66.442	47.646	46.878	43.371	43.595	42.188	44.149	1.177	137.56	-0.282	75.329	151.75	8.8057	48.912	0.0085	-0.06	-0.004	2.053	8.4825	181.04	103.82	102.96	96.733	159.87	619.42
18 JUN 01 08:45:00	95.718	96.383	96.059	95.586	47.993	48.212	43.429	43.654	42.381	44.21	1.1764	137.61	4.8518	75.25	151.74	8.8073	48.913	0.0085	-0.059	-0.003	2.053	8.4822	181.04	103.81	102.96	96.72	159.86	628.78
18 JUN 01 09:00:00	96.731	97.755	97.024	97.115	65.411	66.66	43.487	43.713	42.575	44.272	1.1758	137.66	465.04	75.172	151.73	8.8088	48.914	0.0085	-0.059	-0.003	2.0531	8.4818	181.03	103.79	102.95	96.707	159.85	619.34
18 JUN 01 09:15:00	97.429	98.417	97.711	97.913	86.11	85.999	46.517	43.772	43.05	44.333	1.1736	137.71	925.33	75.094	151.72	8.8104	48.914	0.0086	-0.059	-0.003	2.0531	8.4815	181.03	103.78	102.94	96.694	159.84	632.23
18 JUN 01 09:30:00	98.127	99.08	98.399	98.71	94.438	93.726	53.309	43.831	47.983	49.769	1.1666	137.76	1283.3	75.016	151.7	8.8119	48.915	0.0086	-0.059	-0.003	2.0532	8.4811	181.02	103.77	102.93	96.68	159.83	602.91
18 JUN 01 09:45:00	98.678	99.398	99.041	99.055	95.942	95.51	64.029	47.432	58.866	60.832	1.162	137.81	1742.2	74.937	151.69	8.8134	48.915	0.0086	-0.059	-0.003	2.0532	8.4807	181.02	103.75	102.93	96.667	159.82	616.28
18 JUN 01 10:00:00	99.167	99.714	99.369	99.377	95.478	95.098	80.904	53.887	75.85	77.923	1.1585	137.87	1723.7	74.859	151.68	8.815	48.916	0.0086	-0.059	-0.003	2.0533	8.4804	181.02	103.74	102.92	96.654	159.81	596.49
18 JUN 01 10:15:00	99.657	100.02	99.697	99.738	94.277	94.312	91.523	64.716	91.039	91.368	1.1549	135.54	1725.6	74.781	151.67	8.8165	48.917	0.0087	-0.059	-0.003	2.0533	8.48	181.01	103.73	102.91	96.641	159.81	597.75
18 JUN 01 10:30:00	100.15	100.24	100.14	100.47	93.246	94.083	96.219	81.45	96.627	98.162	1.1586	131.74	1727.7	74.702	151.65	8.8181	48.917	0.0087	-0.059	-0.003	2.0534	8.4797	181.01	103.71	102.91	96.628	159.8	629.18
18 JUN 01 10:45:00	100.64	100.45	100.81	101.2	94.625	94.675	98.347	92.713	98.872	100.08	1.1631	127.94	1731.2	74.624	151.64	8.8196	48.918	0.0087	-0.059	-0.003	2.0534	8.4793	181	103.7	102.9	96.615	159.79	651.04
18 JUN 01 11:00:00	100.89	100.67	101.49	101.64	95.89	95.991	99.533	97.066	100.09	101.28	1.1674	123.94	1728.8	74.546	151.63	8.8212	48.918	0.0087	-0.059	-0.003	2.0535	8.479	181	103.69	102.89	96.602	159.78	630.88
18 JUN 01 11:15:00	101.14	100.89	101.8	102	97.155	96.981	100.25	99.192	100.73	101.56	1.1715	119.66	1728	74.579	151.62	8.8227	48.919	0.0088	-0.059	-0.003	2.0535	8.4786	180.99	103.68	102.88	96.589	159.77	624.95
18 JUN 01 11:30:00	101.38	101.1	101.89	102.34	98.42	97.92	99.971	100.4	100.27	101.15	1.1757	115.59	1738.2	74.649	151.6	8.8242	48.92	0.0088	-0.059	-0.003	2.0536	8.4782	180.99	103.66	102.88	96.576	159.76	646.2

EVAPORATOR PARAMETERS, 0010END-1

Time	T-150-1	T-150-2	T-150-3	T-150-4	T-150-5	T-150-6	T-150-7	T-150-8	T-150-9	T-150-10	D-150-1 evaporator density	L-150-1 evaporator level	F350-1 evaporator steam flow	T-336-1C	F 136-1	P-122-1	P-130-2	PD-130-1-1	PD-130-2-1	PD-130-3-1	PD-130-4-1	PD-130-1	T-335-2	T-130-1-1	T-130-2-1	T-130-3-1	T-130-4-1	F-130-1
	degrees C	degrees C	degrees C	degrees C	degrees C	degrees C	degrees C	degrees C	degrees C	degrees C	Grams/ml	Inches	lb/hour	degrees F	scfm	"wcvac	"wcvac	IN WC	IN WC	IN WC	IN WC	IN WC	degrees F	degrees F	degrees F	degrees F	degrees F	scfm
18 JUN 01 15:00:00	102.84	103.5	103.87	103.4	97.913	96.962	100.53	102.15	101.82	103.09	1.2337	132.18	1739.2	75.626	151.43	8.8459	48.928	0.0091	-0.059	-0.003	2.0542	8.4733	180.93	103.48	102.77	96.393	159.64	629.79
18 JUN 01 15:15:00	103.01	103.65	104.11	103.57	98.352	97.241	100.73	102.31	101.97	103.24	1.2379	130.75	1731.1	75.696	151.41	8.8474	48.929	0.0091	-0.059	-0.003	2.0543	8.4729	180.92	103.47	102.77	96.38	159.63	625.42
18 JUN 01 15:30:00	103.19	103.79	104.26	103.74	98.638	97.519	100.92	102.46	102.12	103.39	1.242	131.21	1729.7	75.766	151.4	8.849	48.929	0.0092	-0.059	-0.003	2.0543	8.4725	180.92	103.45	102.76	96.367	159.62	630.65
18 JUN 01 15:45:00	103.36	103.94	104.38	103.91	98.846	97.757	101.12	102.61	102.26	103.54	1.2462	131.86	1731.7	75.835	151.39	8.8505	48.93	0.0092	-0.059	-0.003	2.0544	8.4722	180.92	103.44	102.75	96.354	159.61	614.25
18 JUN 01 16:00:00	103.53	104.08	104.5	104.07	99.054	97.948	101.32	102.76	102.41	103.69	1.2503	132.75	1726.4	75.905	151.37	8.852	48.93	0.0092	-0.059	-0.003	2.0544	8.4718	180.91	103.43	102.75	96.341	159.6	629.51
18 JUN 01 16:15:00	103.71	104.13	104.62	104.24	99.261	98.139	101.52	102.91	102.56	103.84	1.2545	132.59	1733.2	75.975	151.36	8.8536	48.931	0.0092	-0.059	-0.003	2.0545	8.4715	180.91	103.41	102.74	96.328	159.6	625.14
18 JUN 01 16:30:00	103.88	104.17	104.74	104.41	99.445	98.33	101.71	103.02	102.64	103.94	1.2586	131.52	1735.1	76.045	151.35	8.8551	48.932	0.0093	-0.059	-0.003	2.0545	8.4711	180.9	103.4	102.73	96.315	159.59	638.55
18 JUN 01 16:45:00	104.06	104.22	104.86	104.58	99.558	98.521	101.91	103.06	102.56	103.98	1.2628	131.42	1730.8	76.115	151.34	8.8567	48.932	0.0093	-0.059	-0.003	2.0546	8.4708	180.9	103.39	102.72	96.302	159.58	646.95
18 JUN 01 17:00:00	104.23	104.26	104.98	104.75	99.671	98.712	102.11	103.11	102.48	104.03	1.2669	131.32	1744	76.184	151.32	8.8582	48.933	0.0093	-0.059	-0.003	2.0546	8.4704	180.89	103.37	102.72	96.288	159.57	634.08
18 JUN 01 17:15:00	104.1	104.3	105.06	104.74	99.783	98.903	102.31	103.15	102.39	104.07	1.2711	131.22	1728.4	76.254	151.31	8.8598	48.933	0.0093	-0.059	-0.003	2.0547	8.47	180.89	103.36	102.71	96.275	159.56	652.04
18 JUN 01 17:30:00	103.93	104.35	104.86	104.56	99.896	99.094	102.51	103.2	102.31	104.12	1.2751	131.13	1729.2	76.324	151.3	8.8613	48.934	0.0094	-0.059	-0.003	2.0547	8.4697	180.89	103.35	102.7	96.262	159.55	642.67
18 JUN 01 17:45:00	103.76	104.39	104.66	104.38	100.01	99.285	102.49	103.24	102.22	104.16	1.2777	131.03	1734.8	76.394	151.29	8.8629	48.934	0.0094	-0.059	-0.003	2.0548	8.4693	180.88	103.34	102.69	96.249	159.54	640.08
18 JUN 01 18:00:00	103.58	104.44	104.46	104.19	100.12	99.476	102.33	103.28	102.14	104.21	1.2803	130.93	1736.5	76.464	151.27	8.8644	48.935	0.0094	-0.059	-0.003	2.0548	8.469	180.88	103.32	102.69	96.236	159.54	634.12

EVAPORATOR PARAMETERS, 0010STRT-2

Time	T-150-1	T-150-2	T-150-3	T-150-4	T-150-5	T-150-6	T-150-7	T-150-8	T-150-9	T-150-10	D-150-1 evaporator density	L-150-1 evaporator level	F350-1 evaporator steam flow	T-336-1C	F 136-1	P-122-1	P-130-2	PD-130-1-1	PD-130-2-1	PD-130-3-1	PD-130-4-1	PD-130-1	T-335-2	T-130-1-1	T-130-2-1	T-130-3-1	T-130-4-1	F-130-1
	degrees C	degrees C	degrees C	degrees C	degrees C	degrees C	degrees C	degrees C	degrees C	degrees C	Grams/ml	Inches	lb/hour	degrees F	scfm	"wcvac	"wcvac	IN WC	IN WC	IN WC	IN WC	IN WC	degrees F	degrees F	degrees F	degrees F	degrees F	scfm
19 JUN 01 08:00:00	57.26	59.007	66.803	6.205	46.013	44.578	41.262	41.929	41.222	42.646	1.1796	136.63	0.7685	76.791	150.57	8.9509	48.968	0.0107	-0.057	-0.001	2.0575	8.449	180.63	102.59	102.28	95.505	159.05	648.15
19 JUN 01 08:15:00	96.539	97.633	96.902	96.755	49.033	49.344	41.303	41.97	41.265	42.685	1.1792	136.59	5.2849	76.797	150.55	8.9524	48.969	0.0108	-0.057	-0.001	2.0575	8.4487	180.63	102.58	102.27	95.492	159.04	646.72
19 JUN 01 08:30:00	97.501	98.482	97.727	97.745	72.128	72.202	42.046	42.834	41.307	42.723	1.1788	136.54	646.57	76.804	150.54	8.954	48.97	0.0108	-0.057	-0.001	2.0576	8.4483	180.62	102.56	102.27	95.478	159.03	627.22
19 JUN 01 08:45:00	98.288	99.086	98.382	98.603	91.532	90.707	46.395	47.041	42.405	43.767	1.1761	136.5	1020.2	76.81	150.53	8.9555	48.97	0.0108	-0.057	-0.001	2.0576	8.4479	180.62	102.55	102.26	95.465	159.02	652.98
19 JUN 01 09:00:00	99.075	99.69	99.037	99.321	95.293	94.926	54.169	55.001	48.917	49.553	1.17	136.55	1429.7	76.816	150.52	8.9571	48.971	0.0108	-0.057	-0.001	2.0577	8.4476	180.61	102.54	102.25	95.452	159.01	628.31
19 JUN 01 09:15:00	99.382	100.02	99.54	99.611	96.311	96.65	66.713	67.58	61.709	62.257	1.1667	136.82	1727.2	76.822	150.5	8.9586	48.971	0.0109	-0.057	-0.001	2.0577	8.4472	180.61	102.53	102.24	95.439	159	635.85
19 JUN 01 09:30:00	99.683	100.32	99.833	99.901	96.681	96.119	84.552	84.578	79.403	80.84	1.1639	136.84	1739.5	76.829	150.49	8.9602	48.972	0.0109	-0.057	-0.001	2.0577	8.4469	180.61	102.51	102.24	95.426	158.99	634.97
19 JUN 01 09:45:00	99.984	100.63	100.13	100.19	94.492	94.511	92.692	94.104	92.171	94.175	1.1611	134.53	1734.5	76.835	150.48	8.9617	48.972	0.0109	-0.057	-0.001	2.0578	8.4465	180.6	102.5	102.23	95.413	158.99	657.28
19 JUN 01 10:00:00	100.22	100.88	100.4	100.41	93.555	93.411	96.919	97.69	97.199	98.671	1.1643	131.01	1737.2	76.841	150.46	8.9632	48.973	0.0109	-0.057	-0.001	2.0578	8.4462	180.6	102.49	102.22	95.4	158.98	665.27
19 JUN 01 10:15:00	100.45	101.1	100.63	100.64	94.701	94.615	98.574	99.408	99.048	100.38	1.1684	127.04	1724.6	76.847	150.45	8.9648	48.974	0.0109	-0.057	-0.001	2.0579	8.4458	180.59	102.47	102.22	95.387	158.97	658.19
19 JUN 01 10:30:00	100.68	101.32	100.86	100.87	95.75	95.721	99.633	100.56	100.17	101.55	1.1733	123.13	1733	76.853	150.44	8.9663	48.974	0.011	-0.057	-0.001	2.0579	8.4455	180.59	102.46	102.21	95.374	158.96	626.94
19 JUN 01 10:45:00	100.91	101.54	101.08	101.09	96.799	96.827	100.29	101.06	100.52	102.08	1.1789	119.42	1745.2	76.86	150.43	8.9679	48.975	0.011	-0.057	-0.001	2.058	8.4451	180.58	102.45	102.2	95.361	158.95	655.64
19 JUN 01 11:00:00	101.14	101.76	101.31	101.32	97.847	97.933	100.04	101.5	100.13	102.54	1.1845	115.71	1733.5	76.866	150.41	8.9694	48.975	0.011	-0.057	-0.001	2.058	8.4447	180.58	102.43	102.19	95.348	158.94	620.62
19 JUN 01 11:15:00	101.37	101.98	101.54	101.55	96.682	96.688	97.87	98.598	98.398	99.664	1.1901	121.08	1723.2	76.872	150.4	8.971	48.976	0.011	-0.057	-0.001	2.0581	8.4444	180.58	102.42	102.19	95.335	158.93	608.99
19 JUN 01 11:30:00	101.6	102.2	101.77	101.78	96.349	96.042	99.056	99.824	99.682	100.7	1.1956	119.22	1730.2	76.878	150.39	8.9725	48.977	0.0111	-0.057	-0.001	2.0581	8.444	180.57	102.41	102.18	95.322	158.93	648.41
19 JUN 01 11:45:00	101.84	102.43	101.99	102	97.159	97.065	99.7	100.69	100.45	101.57	1.2012	118.28	1729.3	76.884	150.38	8.9741	48.977	0.0111	-0.057	-0.001	2.0582	8.4437	180.57	102.39	102.17	95.309	158.92	643.89

EVAPORATOR PARAMETERS, 0010END-2

Time	T-150-1	T-150-2	T-150-3	T-150-4	T-150-5	T-150-6	T-150-7	T-150-8	T-150-9	T-150-10	D-150-1 evaporator density	L-150-1 evaporator level	F350-1 evaporator steam flow	T-336-1C	F 136-1	P-122-1	P-130-2	PD-130-1-1	PD-130-2-1	PD-130-3-1	PD-130-4-1	PD-130-1	T-335-2	T-130-1-1	T-130-2-1	T-130-3-1	T-130-4-1	F-130-1
	degrees C	degrees C	degrees C	degrees C	degrees C	degrees C	degrees C	degrees C	degrees C	degrees C	Grams/ml	Inches	lb/hour	degrees F	scfm	"wcvac	"wcvac	IN WC	IN WC	IN WC	IN WC	IN WC	degrees F	degrees F	degrees F	degrees F	degrees F	scfm
19 JUN 01 14:00:00	103.71	104.17	103.94	103.92	97.639	97.229	100.98	101.58	101.32	103.08	1.2347	134.1	1731.5	76.94	150.26	8.988	48.983	0.0113	-0.057	-0.001	2.0586	8.4405	180.53	102.28	102.11	95.191	158.84	649.73
19 JUN 01 14:15:00	103.89	104.35	104.12	104.1	98.114	97.692	101.89	102.63	102.37	103.56	1.2387	132.01	1729.8	76.947	150.25	8.9895	48.983	0.0113	-0.057	-0.001	2.0587	8.4401	180.52	102.26	102.1	95.178	158.83	647.23
19 JUN 01 14:30:00	104.07	104.53	104.3	104.27	98.588	98.155	102.41	102.77	102.5	103.7	1.2426	131.28	1716.5	76.953	150.24	8.991	48.984	0.0113	-0.057	-0.001	2.0587	8.4398	180.52	102.25	102.09	95.165	158.82	630.81
19 JUN 01 14:45:00	104.24	104.7	104.48	104.45	99.022	98.618	102.54	102.91	102.64	103.85	1.2465	131.63	1729.2	76.959	150.22	8.9926	48.984	0.0114	-0.057	-0.001	2.0587	8.4394	180.51	102.24	102.08	95.152	158.81	662.86
19 JUN 01 15:00:00	104.42	104.88	104.66	104.62	99.365	98.966	102.67	103.06	102.77	104	1.2504	132.14	1734.4	76.965	150.21	8.9941	48.985	0.0114	-0.057	-0.001	2.0588	8.439	180.51	102.22	102.08	95.139	158.8	665.6
19 JUN 01 15:15:00	104.6	105.05	104.84	104.8	99.707	99.3	102.79	103.2	102.9	104.15	1.2543	132.96	1737.1	76.971	150.2	8.9957	48.986	0.0114	-0.057	-0.001	2.0588	8.4387	180.51	102.21	102.07	95.126	158.79	626.71
19 JUN 01 15:30:00	104.78	105.23	105.02	104.97	100.05	99.634	102.92	103.34	103.04	104.29	1.2575	133.57	1729.6	76.978	150.19	8.9972	48.986	0.0114	-0.057	-0.001	2.0589	8.4383	180.5	102.2	102.06	95.113	158.79	666.22
19 JUN 01 15:45:00	104.96	105.4	105.19	105.15	100.39	99.968	103.05	103.49	103.17	104.46	1.2607	134.1	1729.5	76.984	150.17	8.9988	48.987	0.0115	-0.057	-0.001	2.0589	8.438	180.5	102.19	102.06	95.1	158.78	652.62
19 JUN 01 16:00:00	105.14	105.58	105.37	105.32	100.73	100.3	103.17	103.76	103.36	104.74	1.2639	134.47	1730.8	76.99	150.16	9.0003	48.987	0.0115	-0.057	-0.001	2.059	8.4376	180.49	102.17	102.05	95.086	158.77	650.36
19 JUN 01 16:15:00	105.32	105.76	105.55	105.5	101.08	100.64	103.3	104.04	103.64	105.02	1.267	134.33	1729.8	76.996	150.15	9.0019	48.988	0.0115	-0.056	0	2.059	8.4373	180.49	102.16	102.04	95.073	158.76	627.25
19 JUN 01 16:30:00	105.49	105.93	105.73	105.67	101.42	100.97	103.34	104.33	103.92	105.31	1.2702	134.18	1747.8	77.003	150.14	9.0034	48.989	0.0115	-0.056	0	2.0591	8.4369	180.48	102.15	102.03	95.06	158.75	656.85
19 JUN 01 16:45:00	105.67	106.11	105.91	105.85	101.41	101.22	103.35	104.62	104.2	105.59	1.2734	134.04	1726.4	77.009	150.12	9.0049	48.989	0.0116	-0.056	0	2.0591	8.4365	180.48	102.13	102.03	95.047	158.74	665.31
19 JUN 01 17:00:00	105.85	106.28	106.09	106.02	101.3	101.06	103.36	104.9	104.48	105.87	1.2765	133.9	1731.9	77.015	150.11	9.0065	48.99	0.0116	-0.056	0	2.0592	8.4362	180.48	102.12	102.02	95.034	158.73	648.18
19 JUN 01 17:15:00	106.03	106.46	106.27	106.19	101.18	100.89	103.37	105.19	104.76	106.15	1.2797	133.74	1716.3	77.021	150.1	9.008	48.99	0.0116	-0.056	0	2.0592	8.4358	180.47	102.11	102.01	95.021	158.73	623.98
19 JUN 01 17:30:00	106.21	106.63	106.44	106.37	101.06	100.73	103.38	105.37	105.04	106.23	1.2829	133.1	1728	77.027	150.09	9.0096	48.991	0.0116	-0.056	0	2.0593	8.4355	180.47	102.09	102.01	95.008	158.72	650.79

Table D-1. Evaporator parameters.

EVAPORATOR PARAMETERS, 0031STRT-1

Time	T-150-1	T-150-2	T-150-3	T-150-4	T-150-5	T-150-6	T-150-7	T-150-8	T-150-9	T-150-10	D-150-1 evaporator density	L-150-1 evaporator level	F350-1 evaporator steam flow	T-336-1C	F 136-1	P-122-1	P-130-2	PD-130-1-1	PD-130-2-1	PD-130-3-1	PD-130-4-1	PD-130-1	T-335-2	T-130-1-1	T-130-2-1	T-130-3-1	T-130-4-1	F-130-1
	degrees C	degrees C	degrees C	degrees C	degrees C	degrees C	degrees C	degrees C	degrees C	degrees C	Grams/ml	Inches	lb/hour	degrees F	scfm	"wcvac	"wcvac	IN WC	IN WC	IN WC	IN WC	IN WC	degrees F	degrees F	degrees F	degrees F	degrees F	scfm
20 JUN 01 08:00:00	54.996	56.163	64.408	64.363	40.55	39.642	32.805	33.555	34.667	36.002	1.1964	136.89	-7.56	74.085	152.45	8.9506	48.8	0.008	-0.056	0	2.1159	8.6697	180.67	102.14	101.9	95.541	158.83	623.95
20 JUN 01 08:15:00	94.28	94.079	95.593	94.447	41.155	40.27	33.189	33.939	34.902	36.238	1.1932	136.77	-0.378	74.133	152.81	9.0915	48.799	0.008	-0.056	0	2.1158	8.6687	180.67	102.15	101.91	95.543	158.83	653.4
20 JUN 01 08:30:00	98.273	99.275	98.793	98.658	54.666	53.947	33.574	34.324	35.136	36.474	1.19	136.65	126.83	74.18	153.17	9.2324	48.798	0.008	-0.056	0	2.1156	8.6678	180.67	102.16	101.92	95.544	158.83	656.12
20 JUN 01 08:45:00	98.844	99.847	99.32	99.195	83.446	84.276	36.241	36.926	35.371	36.711	1.1858	136.53	834.14	74.227	153.53	9.3733	48.798	0.008	-0.056	0	2.1155	8.6669	180.67	102.17	101.93	95.546	158.84	668.99
20 JUN 01 09:00:00	99.248	100.12	99.646	99.537	94.975	94.458	42.124	42.857	37.759	39.66	1.1781	136.41	1284.2	74.275	153.89	9.5141	48.797	0.008	-0.056	0	2.1153	8.666	180.67	102.17	101.94	95.548	158.84	648.41
20 JUN 01 09:15:00	99.651	100.39	99.971	99.878	97.217	96.681	51.938	52.692	46.365	48.09	1.1706	136.89	1711.7	74.322	154.25	9.655	48.796	0.008	-0.056	0	2.1152	8.665	180.67	102.18	101.95	95.549	158.84	645.89
20 JUN 01 09:30:00	100.01	100.66	100.3	100.22	97.347	97.698	67.03	67.738	60.963	62.193	1.1664	137.32	1726.9	74.369	154.61	9.5319	48.796	0.008	-0.056	0	2.115	8.6641	180.67	102.19	101.96	95.551	158.85	676.01
20 JUN 01 09:45:00	100.3	100.9	100.58	100.49	96.936	97.164	86.333	86.044	81.417	83.347	1.1622	137.28	1743	74.417	154.97	9.3324	48.795	0.008	-0.056	0	2.1148	8.6632	180.67	102.2	101.96	95.552	158.85	657.61
20 JUN 01 10:00:00	100.59	101.13	100.84	100.76	95.375	95.251	93.721	95.14	93.64	95.036	1.1597	134.83	1727.8	74.464	155.33	11.08	48.794	0.008	-0.056	0	2.1147	8.6623	180.67	102.21	101.97	95.554	158.85	648.29
20 JUN 01 10:15:00	100.87	101.35	101.09	101.03	94.662	94.53	97.496	98.624	98.065	99.578	1.1639	130.93	1737.4	74.512	155.69	9.7137	48.794	0.008	-0.056	0	2.1145	8.6614	180.67	102.21	101.98	95.556	158.86	650.69
20 JUN 01 10:30:00	101.16	101.58	101.35	101.3	95.732	95.551	99.495	100.24	99.811	101.2	1.1681	127.03	1737.5	74.559	156.05	9.8022	48.793	0.008	-0.056	0	2.1144	8.6604	180.68	102.22	101.99	95.557	158.86	645.37
20 JUN 01 10:45:00	101.44	101.8	101.61	101.57	96.713	96.485	100.54	101.2	100.91	102.22	1.1744	123.13	1722.2	74.606	156.41	11.495	48.793	0.008	-0.056	0	2.1142	8.6595	180.68	102.23	102	95.559	158.86	651.2
20 JUN 01 11:00:00	101.73	102.03	101.86	101.84	97.694	97.42	101.01	101.81	101.3	102.78	1.1811	119.23	1730.2	74.654	156.77	11.407	48.792	0.008	-0.056	0	2.114	8.6586	180.68	102.24	102.01	95.561	158.87	636.56
20 JUN 01 11:15:00	102.01	102.25	102.12	102.11	98.675	98.355	101.27	101.38	100.88	102.57	1.1879	115.33	1730.3	74.701	157.13	11.319	48.791	0.008	-0.056	0	2.1139	8.6577	180.68	102.25	102.02	95.562	158.87	674.96

EVAPORATOR PARAMETERS, 0031END-1

Time	T-150-1	T-150-2	T-150-3	T-150-4	T-150-5	T-150-6	T-150-7	T-150-8	T-150-9	T-150-10	D-150-1 evaporator density	L-150-1 evaporator level	F350-1 evaporator steam flow	T-336-1C	F 136-1	P-122-1	P-130-2	PD-130-1-1	PD-130-2-1	PD-130-3-1	PD-130-4-1	PD-130-1	T-335-2	T-130-1-1	T-130-2-1	T-130-3-1	T-130-4-1	F-130-1
	degrees C	degrees C	degrees C	degrees C	degrees C	degrees C	degrees C	degrees C	degrees C	degrees C	Grams/ml	Inches	lb/hour	degrees F	scfm	"wcvac	"wcvac	IN WC	IN WC	IN WC	IN WC	IN WC	degrees F	degrees F	degrees F	degrees F	degrees F	scfm
20 JUN 01 14:00:00	104.46	104.73	104.67	104.69	97.59	97.256	101.41	102.21	101.93	102.93	1.232	125.57	1727.6	75.222	161.09	10.753	48.784	0.008	-0.056	0	2.1121	8.6475	180.69	102.33	102.13	95.58	158.91	656.82
20 JUN 01 14:15:00	104.68	104.96	104.84	104.87	97.722	97.524	101.65	102.44	102.16	103.17	1.2356	124.93	1731.6	75.269	161.45	10.731	48.783	0.008	-0.056	0	2.112	8.6466	180.69	102.34	102.14	95.581	158.91	637.19
20 JUN 01 14:30:00	104.9	105.18	105.01	105.04	97.854	97.659	101.89	102.68	102.39	103.41	1.2391	125.03	1730.3	75.316	161.8	10.709	48.783	0.008	-0.056	0	2.1118	8.6456	180.69	102.35	102.15	95.583	158.91	638.39
20 JUN 01 14:45:00	105.11	105.41	105.17	105.22	97.985	97.793	102.13	102.91	102.62	103.65	1.2427	125.31	1725.1	75.364	162.16	10.687	48.782	0.008	-0.056	0	2.1117	8.6447	180.69	102.36	102.16	95.585	158.92	663.89
20 JUN 01 15:00:00	105.27	105.58	105.34	105.39	98.117	97.928	102.37	103.15	102.86	103.89	1.2463	126.04	1729.6	75.411	162.52	10.665	48.781	0.008	-0.056	0	2.1115	8.6438	180.69	102.37	102.17	95.586	158.92	651.96
20 JUN 01 15:15:00	105.42	105.72	105.51	105.57	98.249	98.063	102.61	103.38	103.09	104.13	1.2498	127.81	1734	75.458	162.88	10.643	48.781	0.008	-0.056	0	2.1114	8.6429	180.69	102.37	102.18	95.588	158.92	639.12
20 JUN 01 15:30:00	105.57	105.86	105.67	105.74	98.381	98.198	102.84	103.62	103.32	104.36	1.2534	129.52	1725.4	75.506	163.24	10.621	48.78	0.008	-0.056	0	2.1112	8.6419	180.69	102.38	102.19	95.59	158.92	677.59
20 JUN 01 15:45:00	105.71	106	105.84	105.86	98.579	98.333	103.08	103.85	103.55	104.6	1.257	130.94	1735.8	75.553	163.6	10.608	48.779	0.008	-0.056	0	2.111	8.641	180.69	102.39	102.2	95.591	158.93	632.22
20 JUN 01 16:00:00	105.86	106.15	105.95	105.93	99.385	99.003	103.32	104.09	103.79	104.84	1.2605	132.31	1712.9	75.601	163.96	10.611	48.779	0.008	-0.056	0	2.1109	8.6401	180.7	102.4	102.21	95.593	158.93	637.01
20 JUN 01 16:15:00	106.01	106.29	106	106	100.04	99.628	103.56	104.32	104.02	105.08	1.2641	133.47	1729.6	75.648	164.32	10.614	48.778	0.008	-0.056	0	2.1107	8.6392	180.7	102.41	102.22	95.594	158.93	643.51
20 JUN 01 16:30:00	106.15	106.43	106.05	106.06	100.62	100.12	103.8	104.56	104.25	105.32	1.2677	134.43	1730.1	75.695	164.68	10.617	48.777	0.008	-0.056	0	2.1106	8.6382	180.7	102.42	102.23	95.596	158.94	674.5
20 JUN 01 16:45:00	106.3	106.57	106.1	106.13	101.2	100.61	104.04	104.79	104.48	105.56	1.2712	134.47	1721.6	75.743	165.04	10.62	48.777	0.008	-0.056	0	2.1104	8.6373	180.7	102.42	102.24	95.598	158.94	646.77
20 JUN 01 17:00:00	106.44	106.71	106.16	106.19	101.77	101.11	104.28	105.03	104.72	105.76	1.2748	134.1	1738.5	75.79	165.4	10.624	48.776	0.008	-0.056	0	2.1102	8.6364	180.7	102.43	102.25	95.599	158.94	645.82
20 JUN 01 17:15:00	106.59	106.85	106.21	106.26	102.11	101.6	104.37	105.12	104.83	105.82	1.2784	133.08	1734.4	75.837	165.76	10.627	48.775	0.008	-0.056	0	2.1101	8.6355	180.7	102.44	102.26	95.601	158.95	644.32
20 JUN 01 17:30:00	106.74	106.99	106.26	106.33	101.93	102.07	104.42	105.17	104.83	105.88	1.2819	131.77	1732.4	75.885	166.12	10.63	48.775	0.008	-0.056	0	2.1099	8.6346	180.7	102.45	102.27	95.602	158.95	641.71
20 JUN 01 17:45:00	106.88	107.13	106.31	106.39	101.74	101.6	104.47		104.83	105.94	1.2855	130.49	1715.7	75.932	166.48	10.633	48.774	0.008	-0.056	0	2.1098	8.6336	180.7	102.46	102.27	95.604	158.95	648.04

EVAPORATOR PARAMETERS, 0031STRT-2

Time	T-150-1	T-150-2	T-150-3	T-150-4	T-150-5	T-150-6	T-150-7	T-150-8	T-150-9	T-150-10	D-150-1 evaporator density	L-150-1 evaporator level	F350-1 evaporator steam flow	T-336-1C	F 136-1	P-122-1	P-130-2	PD-130-1-1	PD-130-2-1	PD-130-3-1	PD-130-4-1	PD-130-1	T-335-2	T-130-1-1	T-130-2-1	T-130-3-1	T-130-4-1	F-130-1
	degrees C	degrees C	degrees C	degrees C	degrees C	degrees C	degrees C	degrees C	degrees C	degrees C	Grams/ml	Inches	lb/hour	degrees F	scfm	"wcvac	"wcvac	IN WC	IN WC	IN WC	IN WC	IN WC	degrees F	degrees F	degrees F	degrees F	degrees F	scfm
21 JUN 01 08:15:00	97.597	98.4	97.627	97.503	48.193	48.396	37.211	37.359	37.49	38.814	1.1819	136.59	9.6779	75.89	166.16	11.56	48.735	0.008	-0.056	0	2.1004	8.5791	180.75	102.93	102.85	95.699	159.14	654.22
21 JUN 01 08:30:00	99.175	100.02	98.757	99.515	76.222	76.637	38.235	38.954	37.552	39.187	1.1814	136.52	701.28	75.91	166.06	11.555	48.734	0.008	-0.056	0	2.1003	8.5782	180.75	102.94	102.86	95.701	159.15	665.13
21 JUN 01 09:00:00	99.923	100.38	99.826	100.27	93.493	93.117	42.507	43.269	38.604	40.175	1.1809	136.45	1132.2	75.93	165.97	11.551	48.734	0.008	-0.056	0	2.1001	8.5773	180.76	102.95	102.87	95.702	159.15	652.82
21 JUN 01 09:15:00	100.15	100.74	100.31	100.48	96.585	96.137	50.239	51.187	44.778	46.309	1.1795	136.37	1406.8	75.951	165.88	11.547	48.733	0.008	-0.056	0	2.0999	8.5763	180.76	102.96	102.87	95.704	159.15	647.93
21 JUN 01 09:30:00	100.38	101.01	100.52	100.69	97.776	97.779	63.102	63.852	57.098	58.478	1.1711	136.57	1734.8	75.971	165.79	11.543	48.732	0.008	-0.056	0	2.0998	8.5754	180.76	102.96	102.88	95.706	159.16	660.87
21 JUN 01 09:45:00	100.6	101.24	100.73	100.9	97.595	97.469	81.278	82.349	75.452	76.601	1.1664	136.84	1730.4	75.992	165.7	11.538	48.732	0.008	-0.056	0	2.0996	8.5745	180.76	102.97	102.89	95.707	159.16	644.42
21 JUN 01 10:00:00	100.82	101.47	100.93	101.11	96.2	96.063	92.289	93.465	91.434	91.963	1.1624	135.9	1727.8	76.011	165.61	11.534	48.731	0.008	-0.056	0	2.0995	8.5736	180.76	102.98	102.9	95.709	159.16	642.39
21 JUN 01 10:15:00	101.02	101.71	101.22	101.51	94.211	94.088	96.806	97.873	97.301	98.899	1.1648	132.32	1729.9	76.032	165.52	11.53	48.73	0.008	-0.056	0	2.0993	8.5727	180.76	102.99	102.91	95.711	159.17	662.74
21 JUN 01 10:30:00	101.21	101.95	101.71	101.97	95.327	95.2	98.98	99.864	99.488	100.89	1.1695	128.36	1729.8	76.052	165.43	11.526	48.73	0.008	-0.056	0	2.0992	8.5717	180.76	103	102.92	95.712	159.17	641.5
21 JUN 01 10:45:00	101.4	102.19	102.19	102.44	96.272	96.137	100.07	101.01	100.62	102.04	1.1739	124.34	1724.2	76.072	165.34	11.521	48.729	0.008	-0.056	0	2.099	8.5708	180.76	103	102.93	95.714	159.17	633.28
21 JUN 01 11:00:00	101.6	102.42	102.68	102.9	97.217	97.075	100.82	101.64	101.25	102.56	1.1781	120.3	1735.2	76.093	165.25	11.517	48.729	0.008	-0.056	0	2.0988	8.5699	180.76	103.01	102.94	95.715	159.18	662.7
21 JUN 01 11:15:00	101.79	102.66	102.84	103	98.162	98.013	100.82	101.59	100.85	102.89	1.1824	116.27	1729.9	76.113	165.15	11.513	48.728	0.008	-0.056	0	2.0987	8.569	180.76	103.02	102.95	95.717	159.18	664.03
21 JUN 01 11:30:00	101.98	102.79	102.94	103.09	98.928	98.691	99.067	98.815	99.27	99.51	1.1867	121.79	1724.1	76.133	165.06	11.509	48.727	0.008	-0.056	0	2.0985	8.568	180.76	103.03	102.96	95.719	159.18	642.91
21 JUN 01 11:45:00	102.18	102.92	103.04	103.18	95.13	95.048	97.764	98.835	98.483	99.779	1.1909	124.49	1746.7	76.154	164.97	11.504	48.727	0.008	-0.056	0	2.0984	8.5671	180.76	103.04	102.97	95.72	159.19	674.12
21 JUN 01 12:00:00	102.37	103.05	103.14	103.26	95.32	95.229	98.296	99.176	98.954	100.05	1.1952	126.51	1715.2	76.174	164.88	11.5	48.726	0.008	-0.056	0	2.0982	8.5662	180.77	103.04	102.98	95.722	159.19	647.82

EVAPORATOR PARAMETERS, 0031END-2

Time	T-150-1	T-150-2	T-150-3	T-150-4	T-150-5	T-150-6	T-150-7	T-150-8	T-150-9	T-150-10	D-150-1 evaporator density	L-150-1 evaporator level	F350-1 evaporator steam flow	T-336-1C	F 136-1	P-122-1	P-130-2	PD-130-1-1	PD-130-2-1	PD-130-3-1	PD-130-4-1	PD-130-1	T-335-2	T-130-1-1	T-130-2-1	T-130-3-1	T-130-4-1	F-130-1
	degrees C	degrees C	degrees C	degrees C	degrees C	degrees C	degrees C	degrees C	degrees C	degrees C	Grams/ml	Inches	lb/hour	degrees F	scfm	"wcvac	"wcvac	IN WC	IN WC	IN WC	IN WC	IN WC	degrees F	degrees F	degrees F	degrees F	degrees F	scfm
21 JUN 01 13:30:00	103.53	103.88	103.9	103.79	97.637	97.437	101.1	102.03	101.27	102.58	1.2209	135.91	1728.3	76.296	164.33	11.475	48.722	0.008	-0.056	0	2.0973	8.5607	180.77	103.09	103.04	95.731	159.21	640.72
21 JUN 01 13:45:00	103.72	104.12	104.16	103.96	98.124	97.909	101.71	102.46	101.66	102.94	1.2251	133.45	1733	76.316	164.24	11.47	48.721	0.008	-0.056	0	2.0971	8.5597	180.77	103.1	103.05	95.733	159.21	649.24
21 JUN 01 14:00:00	103.91	104.35	104.43	104.24	98.612	98.381	101.9	102.65	101.94	103.25	1.2294	132.47	1730.5	76.337	164.15	11.466	48.721	0.008	-0.056	0	2.0969	8.5588	180.77	103.11	103.06	95.735	159.22	637.74
21 JUN 01 14:15:00	104.11	104.59	104.7	104.52	98.98	98.784	102.09	102.84	102.21	103.55	1.2337	132.23	1727.2	76.357	164.06	11.462	48.72	0.008	-0.056	0	2.0968	8.5579	180.77	103.12	103.07	95.736	159.22	636.51
21 JUN 01 14:30:00	104.3	104.83	104.97	104.8	99.149	98.942	102.28	103.03	102.49	103.85	1.238	131.99	1717.4	76.377	163.97	11.458	48.719	0.008	-0.056	0	2.0966	8.557	180.77	103.12	103.08	95.738	159.22	675.28
21 JUN 01 14:45:00	104.49	105.07	105.21	105.07	99.319	99.099	102.46	103.22	102.69	104.15	1.2422	131.62	1734.4	76.398	163.88	11.453	48.719	0.008	-0.056	0	2.0965	8.556	180.78	103.13	103.09	95.74	159.23	659.59
21 JUN 01 15:00:00	104.69	105.31	105.37	105.31	99.488	99.256	102.61	103.38	102.85	104.46	1.2465	131.11	1732.7	76.418	163.78	11.449	48.718	0.008	-0.056	0	2.0963	8.5551	180.78	103.14	103.1	95.741	159.23	630.83
21 JUN 01 15:15:00	104.88	105.54	105.52	105.49	99.657	99.414	102.67	103.5	103.01	104.63	1.2508	130.6	1721.5	76.438	163.69	11.445	48.717	0.008	-0.056	0	2.0961	8.5542	180.78	103.15	103.11	95.743	159.23	665.68
21 JUN 01 15:30:00	105.07	105.78	105.68	105.66	99.827	99.571	102.73	103.62	103.17	104.79	1.255	129.82	1730.2	76.459	163.6	11.441	48.717	0.008	-0.056	0	2.096	8.5533	180.78	103.16	103.12	95.744	159.23	674.34
21 JUN 01 15:45:00	105.27	105.94	105.84	105.84	100.09	99.692	102.79	103.74	103.33	104.95	1.2593	128.93	1731.8	76.479	163.51	11.436	48.716	0.008	-0.056	0	2.0958	8.5523	180.78	103.17	103.13	95.746	159.24	670.64
21 JUN 01 16:00:00	105.46	106.08	106	106.01	100.36	99.756	102.86	103.86	103.48	105.1	1.2636	128.78	1729.1	76.499	163.42	11.432	48.715	0.008	-0.056	0	2.0957	8.5514	180.78	103.17	103.14	95.748	159.24	638.04
21 JUN 01 16:15:00	105.65	106.22	106.15	106.18	100.63	99.82	102.92	103.98	103.64	105.26	1.2679	129.03	1731.1	76.52	163.33	11.428	48.715	0.008	-0.056	0	2.0955	8.5505	180.78	103.18	103.15	95.749	159.24	661.13
21 JUN 01 16:30:00	105.84	106.35	106.31	106.36	100.9	99.884	102.98	104.1	103.8	105.41	1.2721	129.28	1724.6	76.54	163.24	11.424	48.714	0.008	-0.056	0	2.0954	8.5496	180.78	103.19	103.16	95.751	159.25	671.63
21 JUN 01 16:45:00	106.04	106.49	106.47	106.53	101.16	99.949	103.04	104.22	103.92	105.5	1.2764	131.12	1732.7	76.56	163.15	11.419	48.713	0.008	-0.056	0	2.0952	8.5486	180.78	103.2	103.16	95.752	159.25	673.8
21 JUN 01 17:00:00	106.23	106.63	106.52	106.71	101.43	100.01	103.28	104.34	103.93	105.5	1.2797	132.89	1724.6	76.581	163.05	11.415	48.713	0.008	-0.056	0	2.095	8.5477	180.78	103.21	103.17	95.754	159.25	633
21 JUN 01 17:15:00	106.42	106.76	106.27	106.88	101.7	100.08	103.81	104.46	103.95	105.5	1.2823	133.43	1725.6	76.601	162.96	11.411	48.712	0.008	-0.056	0	2.0949	8.5468	180.78	103.21	103.18	95.756	159.26	649.07

NWCF Fluoride Hot Sump Tank – NCC-119

Metals, Anions, and Miscellaneous

Analyte	Units	Method Number	Sample Log # 9812031		Sample Log # 9902261		Sample Log # 9903061		Sample Log # 9903171	
			Results	LQF	Results	LQF	Results	LQF	Results	LQF
pH		EPA150.1	0.45		0.35	B	0.34	U	0.34	U
Acidity	N	AC7012								
Aluminum	µg/L	SW6010B			8.29E+06		3.04E+07		2.31E+07	
Antimony	µg/L	SW6010B	4.52E+02	U	4.40E+02	U	2.82E+03	U	2.82E+03	U
Arsenic	µg/L	SW6010B	5.04E+02	U	4.74E+02	U	5.74E+03	U N	5.74E+03	U N
Barium	µg/L	SW6010B	1.11E+03		2.94E+02		1.80E+03	B	1.53E+03	B
Beryllium	µg/L	SW6010B	1.8E+01	B	3.8E+01	B	1.31E+02	B	1.11E+02	B
Boron	µg/L	SW6010B								
Cadmium	µg/L	SW6010B	6.59E+04		3.85E+04		1.43E+05		1.06E+05	
Calcium	µg/L	SW6010B								
Chloride	µg/L	AC7171								
Chromium	µg/L	SW6010B	2.64E+04		3.34E+04		1.07E+05		9.03E+04	
Cobalt	µg/L	SW6010B			2.74E+02	B	1.25E+03	B	1.64E+03	B
Copper	µg/L	SW6010B			2.75E+03		5.40E+03	E	5.80E+03	E
Fluoride	µg/L	AC7093	5.77E+05	B	8.84E+05	B E	2.45E+06	B E	2.80E+06	B
Iron	µg/L	SW6010B								
Lead	µg/L	SW6010B	1.82E+04		1.35E+04		4.95E+04	N	3.83E+04	N
Manganese	µg/L	SW6010B			3.78E+04		1.42E+05		1.13E+05	
Mercury	µg/L	SW7470A	1.19E+05		1.95E+07	N	1.41E+07		1.58E+07	
Nickel	µg/L	SW6010B	1.19E+04		1.15E+04	N	2.73E+04		2.20E+04	
Nitrate	µg/L	AC7074								
Phosphorus	µg/L	SW6010B								
Potassium	µg/L	SW6010B								
Selenium	µg/L	SW6010B	3.32E+02	U	5.34E+02	U	3.14E+03	U	3.14E+03	U
Silver	µg/L	SW6010B	1.38E+02	B	3.18E+02	B	2.32E+02	U	2.32E+02	U
Sodium	µg/L	SW6010B								
Sulfur	µg/L	SW6010B								
Thallium	µg/L	SW6010B	4.68E+02	U	5.68E+02	U	3.76E+03	U	3.76E+03	U
Uranium	µg/L	AC7920			5.41E+03		1.46E+04		9.68E+03	
Vanadium	µg/L	SW6010B	1.64E+02	U	1.12E+02	B	4.54E+02	U	4.54E+02	U
Zinc	µg/L	SW6010B	2.01E+04		8.36E+03		1.42E+04	E	1.20E+04	E
Zirconium	µg/L	SW6010B								
UDS	µg/L	AC7972								
TIC	µg/L	AC8060			4.66E+04	U	5.82E+04	U	5.82E+04	U
TOC	µg/L	SW9060			1.29E+05	B	3.06E+05	B	3.06E+05	B

NWCF Fluoride Hot Sump Tank – NCC-119 (con't.)

Metals, Anions, and Miscellaneous (con't)

Analyte	Units	Method Number	Sample Log # 9903201		Sample Log # 9904071		Sample Log # 9904111		Sample Log # 9906241	
			Results	LQF	Results	LQF	Results	LQF	Results	LQF
pH		EPA150.1	0.34	U	0.34	U	0.34	U		
Acidity	N	AC7012							5.8E00	
Aluminum	µg/L	SW6010B	2.16E+07		3.20E+07		2.55E+07		2.05E+07	
Antimony	µg/L	SW6010B	2.82E+03	U	2.82E+03	U	2.82E+03	U	7.60E+02	U
Arsenic	µg/L	SW6010B	9.19E+03	B N	5.74E+03	U	5.74E+03	U	2.59E+03	B
Barium	µg/L	SW6010B	1.55E+03	B	1.94E+03	B	2.00E+03	B	7.66E+02	E
Beryllium	µg/L	SW6010B	1.01E+02	B	1.72E+02	B	1.31E+02	B	1.01E+02	
Boron	µg/L	SW6010B								
Cadmium	µg/L	SW6010B	1.09E+05		3.70E+04	E	2.90E+04	E	1.46E+04	
Calcium	µg/L	SW6010B								
Chloride	µg/L	AC7171								
Chromium	µg/L	SW6010B	9.73E+04		9.67E+04		9.97E+04		4.51E+04	
Cobalt	µg/L	SW6010B	3.74E+02	U	4.85E+02	B	5.45E+02	B	3.15E+02	B
Copper	µg/L	SW6010B	5.43E+03	E	6.73E+03	E	6.53E+03	E	3.45E+03	
Fluoride	µg/L	AC7093	3.38E+06		1.94E+06		2.10E+06	B	6.95E+05	B
Iron	µg/L	SW6010B								
Lead	µg/L	SW6010B	3.82E+04	N	1.02E+05	E	9.68E+04	E	4.55E+04	
Manganese	µg/L	SW6010B	1.07E+05		2.12E+05		2.03E+05		1.02E+05	
Mercury	µg/L	SW7470A	2.19E+07		2.06E+07		2.13E+07		2.97E+06	
Nickel	µg/L	SW6010B	2.25E+04		2.28E+04		2.17E+04		1.40E+04	
Nitrate	µg/L	AC7074								
Phosphorus	µg/L	SW6010B								
Potassium	µg/L	SW6010B								
Selenium	µg/L	SW6010B	3.14E+03	U	3.14E+03	U	3.14E+03	U	6.12E+02	U
Silver	µg/L	SW6010B	2.32E+02	U	2.32E+02	U	2.32E+02	U	9.9E+01	B
Sodium	µg/L	SW6010B								
Sulfur	µg/L	SW6010B								
Thallium	µg/L	SW6010B	3.76E+03	U	3.76E+03	U	3.76E+03	U	1.11E+03	U
Uranium	µg/L	AC7920	1.02E+04		1.65E+04		1.37E+04		8.49E+03	
Vanadium	µg/L	SW6010B	4.54E+02	U	4.54E+02	U	4.54E+02	U	1.71E+02	B
Zinc	µg/L	SW6010B	1.01E+04	E	1.68E+04	E	1.48E+04	E	9.45E+03	
Zirconium	µg/L	SW6010B								
UDS	µg/L	AC7972								
TIC	µg/L	AC8060	5.82E+04	U	5.82E+04	U	5.82E+04	U	6.83E+04	U
TOC	µg/L	SW9060	3.91E+05	B	1.19E+05		7.54E+04	B	1.92E+05	B

NWCF Fluoride Hot Sump Tank – NCC-119 (con't.)

Metals, Anions, and Miscellaneous (con't)

Analyte	Units	Method Number	Sample Log # 9909071		Sample Log # 9910191		Sample Log # 9911071		Sample Log # 0001121	
			Results	LQF	Results	LQF	Results	LQF	Results	LQF
pH		EPA150.1								
Acidity	N	AC7012	1.6E00		4.3E-01	B	1.4E00		1.1E00	
Aluminum	µg/L	SW6010B	2.42E+06		1.49E+06		1.67E+06		1.53E+06	
Antimony	µg/L	SW6010B	7.56E+02	U	7.56E+02	U	7.56E+02	U	1.58E+02	U
Arsenic	µg/L	SW6010B	8.34E+02	U	2.57E+03	B	1.14E+03	B	5.17E+02	U
Barium	µg/L	SW6010B	2.69E+02	B E	7.98E+01	B E	1.91E+02	B E	2.23E+02	
Beryllium	µg/L	SW6010B	1.5E+01	B	< 4.2E00	U	6.3E00	B	9E00	B
Boron	µg/L	SW6010B								
Cadmium	µg/L	SW6010B	4.41E+03		1.09E+03		2.95E+03		2.54E+03	
Calcium	µg/L	SW6010B								
Chloride	µg/L	AC7171								
Chromium	µg/L	SW6010B	6.66E+03		2.96E+03		7.76E+03		6.12E+03	E
Cobalt	µg/L	SW6010B	7.98E+01	U	7.98E+01	U	1.16E+02	B	9.8E+01	B
Copper	µg/L	SW6010B	8.67E+02		2.50E+02	B	7.73E+02		9.61E+02	E
Fluoride	µg/L	AC7093	6.01E+04	B	2.42E+04	B	7.30E+04	B	6.69E+04	B
Iron	µg/L	SW6010B								
Lead	µg/L	SW6010B	5.51E+03		2.24E+03	B	4.53E+03		4.10E+03	
Manganese	µg/L	SW6010B	1.78E+04		6.98E+03		1.65E+04		1.38E+04	
Mercury	µg/L	SW7470A	2.51E+03	E	9.28E+02	B E	3.42E+03		2.83E+03	B E
Nickel	µg/L	SW6010B	5.72E+03		1.98E+03		5.42E+03		4.20E+03	
Nitrate	µg/L	AC7074								
Phosphorus	µg/L	SW6010B								
Potassium	µg/L	SW6010B								
Selenium	µg/L	SW6010B	6.09E+02	U	6.09E+02	U	6.09E+02	U	8.76E+02	U
Silver	µg/L	SW6010B	4.4E+01	U	4.4E+01	U	4.4E+01	U	6.6E+01	B
Sodium	µg/L	SW6010B								
Sulfur	µg/L	SW6010B								
Thallium	µg/L	SW6010B	1.11E+03	U	1.11E+03	U	1.11E+03	U	4.87E+02	U
Uranium	µg/L	AC7920	1.51E+03		6.99E+02		1.03E+03		7.33E+02	
Vanadium	µg/L	SW6010B	7.77E+01	U	7.77E+01	U	7.77E+01	U	3.5E+01	U
Zinc	µg/L	SW6010B	1.85E+03		6.11E+02		1.60E+03		1.49E+03	
Zirconium	µg/L	SW6010B								
UDS	µg/L	AC7972								
TIC	µg/L	AC8060	2.70E+03	U E	3.45E+03	U	3.45E+03	U	2.70E+04	U
TOC	µg/L	SW9060	4.81E+04		1.32E+04		2.95E+04		2.19E+05	

NWCF Fluoride Hot Sump Tank – NCC-119 (con't.)

Metals, Anions, and Miscellaneous (con't)

Analyte	Units	Method Number	Sample Log # 0003012		Sample Log # 0102193		Sample Log # 0106214		Sample Log # 0202251	
			Results	LQF	Results	LQF	Results	LQF	Results	LQF
pH		EPA150.1								
Acidity	N	AC7012	3.3E00		3.03E+00		1.74E+00		3.83E00	
Aluminum	µg/L	SW6010B	5.39E+05		1.47E+07		8.43E+06		2.97E+07	
Antimony	µg/L	SW6010B	1.58E+02	U	2.54E+03	B	1.56E+03	B	1.54E+03	B
Arsenic	µg/L	SW6010B	5.17E+02	U	9.08E+02	U	5.8E+02	U	4.65E+02	B
Barium	µg/L	SW6010B	9.9E+01	B	8.39E+03		2.96E+03		2.25E+04	
Beryllium	µg/L	SW6010B	3E00	B	2.02E+02		6.00E+01	B	1.82E+02	
Boron	µg/L	SW6010B							3.71E+05	
Cadmium	µg/L	SW6010B	6.52E+03		5.72E+05		1.47E+05		2.29E+05	
Calcium	µg/L	SW6010B							4.77E+06	
Chloride	µg/L	AC7171							6.86E+05	
Chromium	µg/L	SW6010B	5.44E+03		4.49E+05		8.70E+04		1.67E+05	
Cobalt	µg/L	SW6010B	2.21E+02	B	2.72E+03		1.42E+03	B		
Copper	µg/L	SW6010B	4.57E+02		8.91E+04		1.91E+04			
Fluoride	µg/L	AC7093	4.35E+04	B	2.97E+06	U N	1.00E+06		3.41E+06	
Iron	µg/L	SW6010B							1.28E+06	
Lead	µg/L	SW6010B	1.58E+03	B	2.95E+05		8.63E+04		1.00E+05	
Manganese	µg/L	SW6010B	4.85E+03		1.68E+06		3.39E+05		2.97E+05	
Mercury	µg/L	SW7470A	2.24E+04		5.09E+05		1.14E+05		6.28E+06	
Nickel	µg/L	SW6010B	4.20E+03		1.88E+05		5.53E+04		9.49E+04	
Nitrate	µg/L	AC7074							4.42E+08	
Phosphorus	µg/L	SW6010B							2.00E+04	
Potassium	µg/L	SW6010B							2.46E+06	
Selenium	µg/L	SW6010B	8.76E+02	U	5.85E+02	U	9.6E+02	U	3.64E+02	U
Silver	µg/L	SW6010B	3.3E+01	U	3.43E+02	B	4E+02	U	2.47E+03	
Sodium	µg/L	SW6010B							1.50E+07	
Sulfur	µg/L	SW6010B							1.21E+06	
Thallium	µg/L	SW6010B	4.87E+02	U	7.67E+02	U	8E+02	U	4.14E+02	U
Uranium	µg/L	AC7920	5.30E+02		2.11E+05		6.22E+04			
Vanadium	µg/L	SW6010B	3.5E+01	U	1.67E+03	B	5.60E+02	B	8.48E+02	B
Zinc	µg/L	SW6010B	4.62E+02		8.22E+04		3.23E+04		4.34E+04	
Zirconium	µg/L	SW6010B							1.17E+06	
UDS	µg/L	AC7972			1.00E+05		1.29E+06		3.8E+04	
TIC	µg/L	AC8060	4.68E+04	U	1.22E+05	U E	1.19E+05	U E		
TOC	µg/L	SW9060	2.51E+04	B	6.13E+05	B	7.55E+05	B	3.47E+05	

NWCF Fluoride Hot Sump Tank – NCC-119 (con't.)

Volatile Organic Compounds and Semi-volatile Organic Compounds

Analyte	Units	Method Number	Sample Log # 9812031		Sample Log # 9902261		Sample Log # 9903061		Sample Log # 9903171	
			Results	LQF	Results	LQF	Results	LQF	Results	LQF
Semi-Volatile Organic Compounds										
2,4-Dinitrophenol	µg/L	SW8270C	1.90E+02	J B D M	2.5E+01	U M	7.3E+01	M		
2,4-Dinitrotoluene	µg/L	SW8270C	2E+01	U	2.5E+01	U	2.5E+01	U		
2,6-Dinitrotoluene	µg/L	SW8270C	2E+01	U	2.5E+01	U	2.5E+01	U		
4-Nitrophenol	µg/L	SW8270C	2E+01	U	2.5E+01	U	2.5E+01	U		
4,6-Dinitro-2-methylphenol	µg/L	SW8270C	2E+01	U M	3.1E+01	M	2.5E+01	U		
Bis-(2-ethylhexyl) phthalate	µg/L	SW8270C	1.90E+02	B Z D	3.4E+01		5.40E+02	D		
Butylbenzyl phthalate	µg/L	SW8270C	2E+01	U	2.5E+01	U	2.5E+01	U		
Diethylphthalate	µg/L	SW8270C	4.6E+01		2.5E+01	U M	2.5E+01	U M		
Di-n-octyl phthalate	µg/L	SW8270C	2E+01	U	2.5E+01	U	2.5E+01	U		
Nitrobenzene	µg/L	SW8270C	2E+01	U	4.1E+01	M	2.5E+01	U M		
n-Nitrosodimethylamine	µg/L	SW8270C	2E+01	U	2.5E+01	U	2.5E+01	U		
Pyridine	µg/L	SW8270C	2E+01	U	2.5E+01	U	2.5E+01	U		
Tri-n-butyl phosphate	µg/L	SW8270C	2E+01	U	2.5E+01	U M	2.5E+01	U M		
Volatile Organic Compounds										
1,1-Dichloroethane	µg/L	SW8260A	1E+01	U	2E00	U H	2E00	U	3E00	U H M
1,1,1-Trichloroethane	µg/L	SW8260A	1E+01	U	2E00	U H	2E00	U	3E00	U H
2-Butanone	µg/L	SW8260A	1.20E+01		3E00	U H	3E00	U	8E00	U H
2-Hexanone	µg/L	SW8260A	3E00	J M	3E00	U H M	3E00	U M	2.3E+01	U H M
4-Methyl-2-pentanone	µg/L	SW8260A	1E+01	U	3E00	U H M	3E00	U M	1.2E+01	U H M
Acetone	µg/L	SW8260A	1E+01	U	2E00	J H	2E00	U	4E+00	U H
Benzene	µg/L	SW8260A	1E+01	U	2E00	U H	2E00	U	3E00	U H M
Bromodichloromethane	µg/L	SW8260A	1E+01	U	2E00	U H	2E00	U	3E00	U H
Bromoform	µg/L	SW8260A	1E+01	U	2E00	U H	2E00	U	1.4E+01	U H
Bromomethane	µg/L	SW8260A	1E+01	U	6E00	J H	3E00	J	1.2E+02	B H M
Carbon disulfide	µg/L	SW8260A	1E+01	U	2E00	U H	2E00	U	4E00	U H
Carbon tetrachloride	µg/L	SW8260A	1E+01	U	2E00	U H	2E00	U	7E00	U H
Chloroform	µg/L	SW8260A	1E+01	U	2E00	U H	2E00	U	3E00	U H
Chloromethane	µg/L	SW8260A	1E+01	U	2E00	J H M	2E00	U M	1.7E+01	U H M
Dibromochloromethane	µg/L	SW8260A	1E+01	U	2E00	U H	2E00	U	6E00	U H
Dichloromethane	µg/L	SW8260A	1E+01	U M	2E00	U H M	2E00	U M	8.6E+01	H M
Styrene	µg/L	SW8260A	1E+01	U M	2E00	U H M	2E00	U M	1.4E+01	U H M
Trichlorofluoromethane	µg/L	SW8260A	1E+01	U	2E00	U H	2E00	U	4E00	U H
Tentatively Identified Organic Compounds										

NWCF Fluoride Hot Sump Tank – NCC-119 (con't.)

Volatile Organic Compounds and Semi-volatile Organic Compounds (con't.)

Analyte	Units	Method Number	Sample Log # 9903201		Sample Log # 9904071		Sample Log # 9904111		Sample Log # 9906241	
			Results	LQF	Results	LQF	Results	LQF	Results	LQF
Semi-Volatile Organic Compounds										
2,4-Dinitrophenol	µg/L	SW8270C	2.7E+02	M D	2.9E+01	M	2.5E+01	U M	2.5E+01	U M
2,4-Dinitrotoluene	µg/L	SW8270C	5E+01	U D	2.5E+01	U	2.5E+01	U	2.5E+01	U
2,6-Dinitrotoluene	µg/L	SW8270C	5E+01	U D	2.5E+01	U	2.5E+01	U	2.5E+01	U
4-Nitrophenol	µg/L	SW8270C	5E+01	U D	2.5E+01	U	2.5E+01	U	2.5E+01	U
4,6-Dinitro-2-methylphenol	µg/L	SW8270C	5E+01	U M D	2.5E+01	U M	2.5E+01	U M	2.5E+01	U M
Bis-(2-ethylhexyl) phthalate	µg/L	SW8270C	5E+01	U D	4.5E+01	B	6.8E+01	B	3.6E+01	
Butylbenzyl phthalate	µg/L	SW8270C	5E+01	U D	2.5E+01	U	2.5E+01	U	2.5E+01	U
Diethylphthalate	µg/L	SW8270C	5E+01	U M D	2.5E+01	U M	2.5E+01	U M	2.5E+01	U M
Di-n-octyl phthalate	µg/L	SW8270C	5E+01	U D	2.5E+01	U Z	2.5E+01	U	2.5E+01	U
Nitrobenzene	µg/L	SW8270C	5E+01	U M D	2.5E+01	U M	2.5E+01	U M	2.5E+01	U M
n-Nitrosodimethylamine	µg/L	SW8270C	5E+01	U M D	2.5E+01	U M	2.5E+01	U	2.5E+01	U
Pyridine	µg/L	SW8270C	5E+01	U D	2.5E+01	U	2.5E+01	U	2.5E+01	U
Tri-n-butyl phosphate	µg/L	SW8270C	5E+01	U M D	2.5E+01	U M	2.5E+01	U M	2.5E+01	U
Volatile Organic Compounds										
1,1-Dichloroethane	µg/L	SW8260A	3E00	U M	3E00	U M	3E00	U M	2E00	U
1,1,1-Trichloroethane	µg/L	SW8260A	3E00	U	3E00	U	3E00	U	2E00	U
2-Butanone	µg/L	SW8260A	8E00	U	8E00	U	8E00	U	3E00	U
2-Hexanone	µg/L	SW8260A	2.3E+01	U M	2.3E+01	U M	2.3E+01	U M	3E00	U
4-Methyl-2-pentanone	µg/L	SW8260A	1.2E+01	U M	1.2E+01	U M	1.2E+01	U M	3E00	U
Acetone	µg/L	SW8260A	4E00	U	6E00	J	4E00	J B	9E00	J B M
Benzene	µg/L	SW8260A	3E00	U M	3E00	U M	3E00	U M	2E00	U M
Bromodichloromethane	µg/L	SW8260A	3E00	U	3E00	U	3E00	U	2E00	U
Bromoform	µg/L	SW8260A	1.4E+01	U	1.4E+01	U	1.4E+01	U	2E00	U
Bromomethane	µg/L	SW8260A	5.9E+01	B M	9.5E+01	M	4.7E+01	B M	7E00	J M
Carbon disulfide	µg/L	SW8260A	4E00	U	4E00	U	4E00	U	2E00	U
Carbon tetrachloride	µg/L	SW8260A	7E00	U	7E00	U	7E00	U	2E00	U
Chloroform	µg/L	SW8260A	3E00	U	3E00	U	3E00	U	2E00	U
Chloromethane	µg/L	SW8260A	1.7E+01	U M	8.9E+01	M	1.7E+01	U M	2E00	U
Dibromochloromethane	µg/L	SW8260A	6E00	U	6E00	U	6E00	U	2E00	U
Dichloromethane	µg/L	SW8260A	6E00	U M	6E00	U M	2.1E+01	M	2E00	U
Styrene	µg/L	SW8260A	1.4E+01	U M	1.4E+01	U M	1.4E+01	U M	2E00	U M
Trichlorofluoromethane	µg/L	SW8260A	4E00	U	4E00	U	4E00	U	2E00	U
Tentatively Identified Organic Compounds										
no. Ided / total conc.	µg/L		21 / 3.79E+03		21 / 6.23E+02		17 / 5.78E+02		21 / 3.74E+03	

NWCF Fluoride Hot Sump Tank – NCC-119 (con't.)

Volatile Organic Compounds and Semi-volatile Organic Compounds (con't.)

Analyte	Units	Method Number	Sample Log # 9909071		Sample Log # 9910191		Sample Log # 9911071		Sample Log # 0001121	
			Results	LQF	Results	LQF	Results	LQF	Results	LQF
Semi-Volatile Organic Compounds										
2,4-Dinitrophenol	µg/L	SW8270C	8E+01	M	4E+01	U M	9.9E+01	M	4E+01	U M D
2,4-Dinitrotoluene	µg/L	SW8270C	2.5E+01	U	2E+01	U	2E+01	U	4E+01	U D
2,6-Dinitrotoluene	µg/L	SW8270C	2.5E+01	U	2E+01	U	2E+01	U	4E+01	U D
4-Nitrophenol	µg/L	SW8270C	2.5E+01	U	2E+01	U	1E+01	U	4E+01	U D
4,6-Dinitro-2-methylphenol	µg/L	SW8270C	2.5E+01	U	4E+01	U M	4E+01	U M	4E+01	U M D
Bis-(2-ethylhexyl) phthalate	µg/L	SW8270C	2.5E+01	U	2E+01	U	2E+01	U	4E+01	U D
Butylbenzyl phthalate	µg/L	SW8270C	2.5E+01	U	2E+01	U	2E+01	U	4E+01	U D
Diethylphthalate	µg/L	SW8270C	2.5E+01	U M	2E+01	U M	2E+01	U M	4E+01	U D
Di-n-octyl phthalate	µg/L	SW8270C	2.5E+01	U	2E+01	U	2E+01	U	4E+01	U D
Nitrobenzene	µg/L	SW8270C	2.5E+01	U M	4E+01	U	2E+01	U	4E+01	U D
n-Nitrosodimethylamine	µg/L	SW8270C	2.5E+01	U	4E+01	U	4E+01	U	4E+01	U D
Pyridine	µg/L	SW8270C	2.5E+01	U	2E+01	U	2E+01	U	4E+01	U D
Tri-n-butyl phosphate	µg/L	SW8270C	2.5E+01	U M	2E+01	U M	2E+01	U M	4E+01	U D
Volatile Organic Compounds										
1,1-Dichloroethane	µg/L	SW8260A	1E00	U	1E00	U	1E+01	U	1E00	U
1,1,1-Trichloroethane	µg/L	SW8260A	1E00	U	1E00	U	1E+01	U	1E00	U
2-Butanone	µg/L	SW8260A	2E00	U	2E00	U	1E+01	U	2E00	U M
2-Hexanone	µg/L	SW8260A	2E00	U	2E00	U	1E+01	U	2E00	U M
4-Methyl-2-pentanone	µg/L	SW8260A	2E00	U	2E00	U	1E+01	U	2E00	U M
Acetone	µg/L	SW8260A	4E00	J B M	2E00	U	3E00	J B	4E00	J M
Benzene	µg/L	SW8260A	1E00	U M	1E00	U M	3E00	J B M	1E00	U M
Bromodichloromethane	µg/L	SW8260A	1E00	U	1E00	U	1E+01	U	1E00	U
Bromoform	µg/L	SW8260A	2E00	U M	2E00	U	1E+01	U	2E00	U
Bromomethane	µg/L	SW8260A	2E00	U	2E00	U	1E+01	U	2E00	U
Carbon disulfide	µg/L	SW8260A	1E00	U	1E00	U	1E+01	U	1E00	U
Carbon tetrachloride	µg/L	SW8260A	2E00	U	2E00	U	1E+01	U	2E00	U
Chloroform	µg/L	SW8260A	1E00	U	1E00	U	1E+01	U	1E00	U
Chloromethane	µg/L	SW8260A	2E00	U	2E00	U	1E+01	U	2E00	U M
Dibromochloromethane	µg/L	SW8260A	1E00	U	1E00	U	1E+01	U	1E00	U
Dichloromethane	µg/L	SW8260A	1E00	U	1E00	U M	1E+01	U M	1E00	U M
Styrene	µg/L	SW8260A	1E00	U M	1E00	U M	1E+01	U M	1E00	U M
Trichlorofluoromethane	µg/L	SW8260A	1E00	U	1E00	U	1E+01	U	1E00	U
Tentatively Identified Organic Compounds										
no. Ided / total conc.	µg/L		15 / 6.48E+02	SVOCs only	10 / 8.88E+02		11 / 3.27E+02		1 / 1.80E+04	

NWCF Fluoride Hot Sump Tank – NCC-119 (con't.)

Volatile Organic Compounds and Semi-volatile Organic Compounds (con't.)

Analyte	Units	Method Number	Sample Log # 0003012		Sample Log # 0102193		Sample Log # 0106214		Sample Log # 0202251	
			Results	LQF	Results	LQF	Results	LQF	Results	LQF
Semi-Volatile Organic Compounds										
2,4-Dinitrophenol	µg/L	SW8270C	9E00	J	2E+01	U M	4.4E+01	M	1.4E+01	U M
2,4-Dinitrotoluene	µg/L	SW8270C	2E+01	U	2E+01	U	2E+01	U	8E00	U
2,6-Dinitrotoluene	µg/L	SW8270C	2E+01	U	1.2E+01	J	2E+01	U	1.1E+01	U
4-Nitrophenol	µg/L	SW8270C	2E+01	U	2E+01	U	2E+01	U M	3E+01	U X
4,6-Dinitro-2-methylphenol	µg/L	SW8270C	2E+01	U	2E+01	U M	2E+01	U M	1.3E+01	U M
Bis-(2-ethylhexyl) phthalate	µg/L	SW8270C	6E00	J	2E+01	U	1.4E+02	U	9E00	U M
Butylbenzyl phthalate	µg/L	SW8270C	2E+01	U	2E+01	U	2E+01	U	9E00	U M
Diethylphthalate	µg/L	SW8270C	8E00	J M	2E+01	U M	2E+01	U M	1.2E+01	U M
Di-n-octyl phthalate	µg/L	SW8270C	2E+01	U	2E+01	U	2E+01	U	6E00	U
Nitrobenzene	µg/L	SW8270C	2E+01	U M	2E+01	U	2E+01	U	7E00	U M
n-Nitrosodimethylamine	µg/L	SW8270C	2E+01	U M	1.4E+02		3.6E+01		2.4E+01	U X
Pyridine	µg/L	SW8270C	2E+01	U	2E+01	U	2E+01	U	1.5E+01	U
Tri-n-butyl phosphate	µg/L	SW8270C	2E+01	U M	2E+01	U			1.1E+01	B J M
Volatile Organic Compounds										
1,1-Dichloroethane	µg/L	SW8260A	1E+01	U	1E+01	U	1E+01	U	1E+01	U
1,1,1-Trichloroethane	µg/L	SW8260A	1E+01	U	1E+01	U	1E+01	U	1E+01	U
2-Butanone	µg/L	SW8260A	1E+01	U M	1E+01	U	1E+01	U	1E+01	U
2-Hexanone	µg/L	SW8260A	1E+01	U M	2E+01	U M Z	2E+01	U Z	1E+01	U
4-Methyl-2-pentanone	µg/L	SW8260A	1E+01	U	2E+01	U Z	2E+01	U Z	1E+01	U
Acetone	µg/L	SW8260A	7E00	B J M	2E+01	U Z Y	2E+01	U Z	7E00	J B
Benzene	µg/L	SW8260A	1E+01	U M	1E+01	U	1E+01	U	1E+01	U M
Bromodichloromethane	µg/L	SW8260A	1E+01	U	1E+01	U	1E+01	U	1E+01	U
Bromoform	µg/L	SW8260A	1E+01	U	1E+01	U	1E+01	U	1E+01	U
Bromomethane	µg/L	SW8260A	1E+01	U	1.8E+01		3.7E+01	B M	2.6E+01	
Carbon disulfide	µg/L	SW8260A	1E+01	U	1E+01	U	1E+01	U	1E+01	U
Carbon tetrachloride	µg/L	SW8260A	1E+01	U	1E+01	U M	1E+01	U	1E+01	U M
Chloroform	µg/L	SW8260A	1E+01	U	1E+01	U	1E+01	U	1E+01	U
Chloromethane	µg/L	SW8260A	1E+01	U	6E00	J	1E+01	U	1.7E+01	M
Dibromochloromethane	µg/L	SW8260A	1E+01	U	1E+01	U	1E+01	U	1E+01	U
Dichloromethane	µg/L	SW8260A	4.8E+01	M	2E+01	U Z Y	2E+01	U Z	1E+01	U
Styrene	µg/L	SW8260A	1E+01	U M	1E+01	U	2E+01	U Z	1E+01	U M
Trichlorofluoromethane	µg/L	SW8260A	1E+01	U	1E+01	U	1E+01	U	1E+01	U
Tentatively Identified Organic Compounds										
no. Ided / total conc.	µg/L		4 / 4.91E+02		9 / 2.94E+02	SVOCs only	21 / 5.22E+02		12 / 4.94E+02	

NWCF Non-Fluoride Hot Sump Tank – NCC-122

Metals, Anions, and Miscellaneous

Analyte	Units	Method Number	Sample Log # 9902051		Sample Log # 9904181		Sample Log # 0003284		Sample Log # 0102123	
			Results	LQF	Results	LQF	Results	LQF	Results	LQF
pH		EPA150.1	0.35		0.63	B				
Acidity	N	AC7012					3.3E-01	B	4.1E-01	
Aluminum	µg/L	SW6010B	2.06E+04		6.72E+05		1.88E+05		2.01E+04	
Antimony	µg/L	SW6010B	4.52E+02	U	2.20E+02	U	1.32E+02	U	9E00	B
Arsenic	µg/L	SW6010B	5.04E+02	U	2.37E+02	U	8.5E+01	U	4.5E00	U
Barium	µg/L	SW6010B	1.10E+02	B	1.17E+02	B	4.13E+02		1.54E+01	
Beryllium	µg/L	SW6010B	2.0E00	B	3.0E00	B	1.7E00		3E-01	B
Boron	µg/L	SW6010B								
Cadmium	µg/L	SW6010B	2.76E+02	B	2.11E+03	N	4.55E+02		7.88E+02	
Calcium	µg/L	SW6010B								
Chloride	µg/L	AC7171								
Chromium	µg/L	SW6010B	2.24E+03		4.29E+03	N	1.27E+03		6.57E+02	
Cobalt	µg/L	SW6010B	7.4E+01	U	2.4E+01	B	1.67E+01		5.7E00	B
Copper	µg/L	SW6010B	5.24E+02	B	4.83E+02		8.60E+02		1.39E+02	
Fluoride	µg/L	AC7093	2.56E+04	U E	3.31E+04	B	1.85E+04	U	1.14E+05	U N
Iron	µg/L	SW6010B								
Lead	µg/L	SW6010B	3.72E+02	U	1.92E+03	B	8.60E+02		4.19E+02	
Manganese	µg/L	SW6010B	3.64E+03		7.32E+03		2.33E+03		2.17E+03	
Mercury	µg/L	SW7470A	1.91E+04		6.34E+05		1.90E+03		7.44E+03	
Nickel	µg/L	SW6010B	1.81E+03		1.60E+03		9.07E+02		3.01E+02	
Nitrate	µg/L	AC7074								
Phosphorus	µg/L	SW6010B								
Potassium	µg/L	SW6010B								
Selenium	µg/L	SW6010B	3.32E+02	U	2.67E+02	U	7.8E+01	U	2.9E00	U
Silver	µg/L	SW6010B	1.28E+02	U	6.2E+01	U	2.5E+01	U	1.7E00	U
Sodium	µg/L	SW6010B								
Sulfur	µg/L	SW6010B								
Thallium	µg/L	SW6010B	4.68E+02	U	2.84E+02	U	1.18E+02	U	3.8E00	U
Uranium	µg/L	AC7920	1.89E+02	U	3.17E+02		1.29E+02		3.42E+02	
Vanadium	µg/L	SW6010B	1.64E+02	U	3.6E+01	U	4.5E+01	U	3.4E+00	B
Zinc	µg/L	SW6010B	2.57E+03		2.88E+03		5.78E+03		2.17E+02	
Zirconium	µg/L	SW6010B								
UDS	µg/L	AC7972					0.00E00		2E+05	
TIC	µg/L	AC8060	5.83E+04	U	5.82E+04	U	1.40E+05	U E	2.38E+04	U E
TOC	µg/L	SW9060	4.95E+04		1.18E+05	B	8.20E+04	B	7.92E+04	B

NWCF Non-Fluoride Hot Sump Tank – NCC-122 (con't.)

Metals, Anions, and Miscellaneous (con't.)

Analyte	Units	Method Number	Sample Log # 0106221		Sample Log # 0202141					
			Results	LQF	Results	LQF	Results	LQF	Results	LQF
pH		EPA150.1								
Acidity	N	AC7012	5.1E-01		7.19E-01					
Aluminum	µg/L	SW6010B	1.7E+03		8.63E+02					
Antimony	µg/L	SW6010B	4.7E+01	U	3.7E+01	U				
Arsenic	µg/L	SW6010B	2.9E+01	U	3.3E+01	U				
Barium	µg/L	SW6010B	9E00	B	1.0E+01	B				
Beryllium	µg/L	SW6010B	1E00	U	1E00	U				
Boron	µg/L	SW6010B			3.56E+03					
Cadmium	µg/L	SW6010B	4E00	U	6.0E00	B				
Calcium	µg/L	SW6010B			9.84E+02	E				
Chloride	µg/L	AC7171			3.24E+04	U				
Chromium	µg/L	SW6010B	2.7E+01	B	5.5E+01	B				
Cobalt	µg/L	SW6010B	1E+01	U						
Copper	µg/L	SW6010B	1.4E+01	U						
Fluoride	µg/L	AC7093	7.02E+04	U	2.35E+04	U				
Iron	µg/L	SW6010B			2.32E+03					
Lead	µg/L	SW6010B	6.3E+01	U	4.4E+01	U				
Manganese	µg/L	SW6010B	1.3E+01	B	3.2E+01					
Mercury	µg/L	SW7470A	3.95E+03		1.66E+04					
Nickel	µg/L	SW6010B	3.2E+01	B	6.0E+01	B				
Nitrate	µg/L	AC7074			4.04E+07					
Phosphorus	µg/L	SW6010B			8.1E+01	B				
Potassium	µg/L	SW6010B			2.62E+02	U				
Selenium	µg/L	SW6010B	4.8E+01	U	3.6E+01	U				
Silver	µg/L	SW6010B	2E+01	U	2.0E+01	U				
Sodium	µg/L	SW6010B			4.12E+03					
Sulfur	µg/L	SW6010B			2.62E+02	B				
Thallium	µg/L	SW6010B	4E+01	U	4.1E+01	U				
Uranium	mg/L	AC7920	3.2E+02	U						
Vanadium	µg/L	SW6010B	1E+01	U	1.4E+01	U				
Zinc	µg/L	SW6010B	5.3E+01		4.1E+01					
Zirconium	µg/L	SW6010B			6.0E+01	B				
UDS	µg/L	AC7972	5.0E+03	U	1E+05					
TIC	µg/L	AC8060	2.38E+04	U E						
TOC	µg/L	SW9060	1.48E+05	B	2.94E+04					

NWCF Non-Fluoride Hot Sump Tank – NCC-122 (con't.)

Volatile Organic Compounds and Semi-volatile Organic Compounds

Analyte	Units	Method Number	Sample Log # 9902051		Sample Log # 9904181		Sample Log # 0003284		Sample Log # 0102123	
			Results	LQF	Results	LQF	Results	LQF	Results	LQF
Semi-Volatile Organic Compounds										
2,4-Dinitrophenol	µg/L	SW8270C			2.5E+01	U M	7.8E+01	M	1.2E+02	M
2,4-Dinitrotoluene	µg/L	SW8270C			2.5E+01	U	2E+01	U	7E00	J
2,6-Dinitrotoluene	µg/L	SW8270C			2.5E+01	U	2E+01	U	2E+01	U
4-Nitrophenol	µg/L	SW8270C			2.5E+01	U	1.8E+01	J M	2E+01	U
4,6-Dinitro-2-methylphenol	µg/L	SW8270C			2.5E+01	U M	2E+01	U M	2E+01	U M
Bis-(2-ethylhexyl) phthalate	µg/L	SW8270C			2.5E+01	U	4E+01		5.2E+01	
Butylbenzyl phthalate	µg/L	SW8270C			2.5E+01	U	2E+01	U	2E+01	U
Diethylphthalate	µg/L	SW8270C			2.5E+01	U M	1E+01	J	2E+01	U M
Di-n-octyl phthalate	µg/L	SW8270C			2.5E+01	U	2E+01	U	5.8E+01	
Nitrobenzene	µg/L	SW8270C			2.5E+01	U M	2E+01	U	2E+01	J
n-Nitrosodimethylamine	µg/L	SW8270C			2.5E+01	U M	2E+01	U	3.6E+02	D
Pyridine	µg/L	SW8270C			2.5E+01	U	2E+01	U	2E+01	U
Tri-n-butyl phosphate	µg/L	SW8270C			2.5E+01	U M	2E+01	U M	4.8E+01	
Volatile Organic Compounds										
1,1-Dichloroethane	µg/L	SW8260A			3E00	U M	1E+01	U	1E+01	U
1,1,1-Trichloroethane	µg/L	SW8260A			3E00	U	1E+01	U	1E+01	U
2-Butanone	µg/L	SW8260A			8E00	U	1E+01	U	1E+01	U
2-Hexanone	µg/L	SW8260A			2.3E+01	U M	1E+01	U	1E+01	U
4-Methyl-2-pentanone	µg/L	SW8260A			1.2E+01	U M	1E+01	U	1E+01	U
Acetone	µg/L	SW8260A			4E00	U	1.8E+01	BM	1.1E+02	E
Benzene	µg/L	SW8260A			3E00	U M	1E+01	U M	1E+01	U
Bromodichloromethane	µg/L	SW8260A			3E00	U	1E+01	U	1E+01	U
Bromoform	µg/L	SW8260A			1.4E+01	U	1E+01	U	1E+01	U
Bromomethane	µg/L	SW8260A			7E00	U M	1E+01	U M	1.9E+01	
Carbon disulfide	µg/L	SW8260A			4E00	U	1E+01	U	1E+01	U
Carbon tetrachloride	µg/L	SW8260A			7E00	U	1E+01	U	1E+01	U
Chloroform	µg/L	SW8260A			3E00	U	1E+01	U	1E+01	U
Chloromethane	µg/L	SW8260A			1.7E+01	U M	1E+01	U	3.7E+01	M
Dibromochloromethane	µg/L	SW8260A			6E00	U	1E+01	U	1E+01	U
Dichloromethane	µg/L	SW8260A			6E00	U M	1E+01	U M	1E+01	U
Styrene	µg/L	SW8260A			1.4E+01	U M	1E+01	U M	1E+01	U
Trichlorofluoromethane	µg/L	SW8260A			4E00	U	1E+01	U	1E+01	U
Tentatively Identified Organic Compounds										
no. Ided / total conc.	µg/L				6 / 1.98E+02	SVOCs only	20 / 2.64E+03		21 / 7.85E+02	

NWCF Non-Fluoride Hot Sump Tank – NCC-122 (con't.)

Volatile Organic Compounds and Semi-volatile Organic Compounds (con't.)

Analyte	Units	Method Number	Sample Log # 0106221		Sample Log # 0202141					
			Results	LQF	Results	LQF	Results	LQF	Results	LQF
Semi-Volatile Organic Compounds										
2,4-Dinitrophenol	µg/L	SW8270C	1.1E+02	M	1.3E+01	U M				
2,4-Dinitrotoluene	µg/L	SW8270C	2E+01	U	8E00	U				
2,6-Dinitrotoluene	µg/L	SW8270C	2E+01	U	1.1E+01	U				
4-Nitrophenol	µg/L	SW8270C	2E+01	U M	3E+01	U X				
4,6-Dinitro-2-methylphenol	µg/L	SW8270C	2E+01	U M	1.3E+01	U M				
Bis-(2-ethylhexyl) phthalate	µg/L	SW8270C	2E+01	U	9E00	U M				
Butylbenzyl phthalate	µg/L	SW8270C	2E+01	U	9E00	U M				
Diethylphthalate	µg/L	SW8270C	2E+01	U M	1.2E+01	U M				
Di-n-octyl phthalate	µg/L	SW8270C	2E+01	U	6E00	U				
Nitrobenzene	µg/L	SW8270C	2E+01	U	7E00	U M				
n-Nitrosodimethylamine	µg/L	SW8270C	4.2E+01		2.4E+01	U X				
Pyridine	µg/L	SW8270C	2E+01	U	1.5E+01	U				
Tri-n-butyl phosphate	µg/L	SW8270C			4.2E+01	B M				
Volatile Organic Compounds										
1,1-Dichloroethane	µg/L	SW8260A	1E+01	U	1E+01	U				
1,1,1-Trichloroethane	µg/L	SW8260A	1E+01	U	1E+01	U				
2-Butanone	µg/L	SW8260A	1E+01	U	1E+01	U				
2-Hexanone	µg/L	SW8260A	2E+01	U Z	1E+01	U				
4-Methyl-2-pentanone	µg/L	SW8260A	2E+01	U Z	1E+01	U				
Acetone	µg/L	SW8260A	3.2E+01	Y	5.1E+01	B				
Benzene	µg/L	SW8260A	1E+01	U	1E+01	U M				
Bromodichloromethane	µg/L	SW8260A	1E+01	U	1E+01	U				
Bromoform	µg/L	SW8260A	1E+01	U	1E+01	U				
Bromomethane	µg/L	SW8260A	1.6E+02	E B M	4E+01					
Carbon disulfide	µg/L	SW8260A	1E+01	U	1E+01	U				
Carbon tetrachloride	µg/L	SW8260A	1E+01	U	1E+01	U M				
Chloroform	µg/L	SW8260A	1E+01	U	1E+01	U				
Chloromethane	µg/L	SW8260A	1E+01	U	7E+01	M				
Dibromochloromethane	µg/L	SW8260A	1E+01	U	1E+01	U				
Dichloromethane	µg/L	SW8260A	2E+01	U Z	1E+01	U				
Styrene	µg/L	SW8260A	1E+01	U	1E+01	U M				
Trichlorofluoromethane	µg/L	SW8260A	1E+01	U	1E+01	U				
Tentatively Identified Organic Compounds										
no. Ided / total conc.	µg/L		7 / 1.65E+02		9 / 1.61E+02					

NWCF Decontamination Hold Tanks – NCD-123 & NCD-129

Metals, Anions, and Miscellaneous

Analyte	Units	Method Number	Sample Log # 9902101		Sample Log # 9904021		Sample Log # 9906171		Sample Log # 0104176	
			Results	LQF	Results	LQF	Results	LQF	Results	LQF
pH		EPA150.1	0.97		0.34	U				
Acidity	N	AC7012					5.7E-01	B	7.79E-01	
Aluminum	µg/L	SW6010B	9.14E+04		7.39E+04		5.25E+04		7.14E+03	
Antimony	µg/L	SW6010B	3.12E+02	B	2.20E+02	U	4.57E+02		2.06E+03	
Arsenic	µg/L	SW6010B	2.52E+02	U	2.37E+02	U	3.9E+01	U	1.45E+01	U
Barium	µg/L	SW6010B	9.5E+01	B	1.07E+02	B	3.39E+02		2.26E+03	
Beryllium	µg/L	SW6010B	2.0E00	B	2E00	U	1E00	U	5E-01	U
Boron	µg/L	SW6010B								
Cadmium	µg/L	SW6010B	6.94E+02		3.81E+02		1.35E+02		4.5E+01	
Calcium	µg/L	SW6010B								
Chloride	µg/L	AC7171								
Chromium	µg/L	SW6010B	4.21E+03		4.88E+03		2.13E+03		5.78E+02	
Cobalt	µg/L	SW6010B			2.2E+01	U	2.3E+01	B	5E00	U
Copper	µg/L	SW6010B			1.32E+03		3.10E+03		1.6E+02	
Fluoride	µg/L	AC7093	2.56E+04	U E	2.57E+04	U	1.28E+04	U	7.02E+04	U
Iron	µg/L	SW6010B								
Lead	µg/L	SW6010B	4.11E+02	B	2.16E+03		1.92E+03		1.16E+03	
Manganese	µg/L	SW6010B			4.38E+04		1.24E+04		5.36E+02	
Mercury	µg/L	SW7470A	3.63E+02		1.03E+03		2.93E+03	E	2.12E+02	
Nickel	µg/L	SW6010B	8.58E+02		2.21E+03		1.23E+03		3.47E+02	
Nitrate	µg/L	AC7074								
Phosphorus	µg/L	SW6010B								
Potassium	µg/L	SW6010B								
Selenium	µg/L	SW6010B	1.66E+02	U	2.67E+02	U	4.3E+01	U	2.4E+01	U
Silver	µg/L	SW6010B	6.4E+01	U	1.08E+01	B	7.7E+01	B	1E+01	U
Sodium	µg/L	SW6010B								
Sulfur	µg/L	SW6010B								
Thallium	µg/L	SW6010B	2.34E+02	U	2.84E+02	U	3.4E+01	U	2E+01	U
Uranium	µg/L	AC7920	1.90E+02	U					3.2E+02	U
Vanadium	µg/L	SW6010B	8.2E+01	U	5.0E+01	B	3.5E+01	B	2.05E+01	B
Zinc	µg/L	SW6010B	6.98E+03		2.13E+04		1.16E+04		3.1E+03	
Zirconium	µg/L	SW6010B								
UDS	µg/L	AC7972							2.5E+04	
TIC	µg/L	AC8060	9.32E+04	U					5.95E+04	U E
TOC	µg/L	SW9060	1.24E+06						1.66E+05	

NWCF Decontamination Hold Tanks – NCD-123 & NCD-129 (con't.)

Metals, Anions, and Miscellaneous (con't.)

Analyte	Units	Method Number	Sample Log # 0107021	
			Results	LQF
pH		EPA150.1		
Acidity	N	AC7012	7.2E-01	
Aluminum	µg/L	SW6010B	2.14E+04	
Antimony	µg/L	SW6010B	3.24E+02	
Arsenic	µg/L	SW6010B	1.45E+01	U
Barium	µg/L	SW6010B	3.03E+03	
Beryllium	µg/L	SW6010B	5E-01	B
Boron	µg/L	SW6010B		
Cadmium	µg/L	SW6010B	1.85E+02	
Calcium	µg/L	SW6010B		
Chloride	µg/L	AC7171		
Chromium	µg/L	SW6010B	4E+03	
Cobalt	µg/L	SW6010B	3.85E+01	B
Copper	µg/L	SW6010B	4E+02	
Fluoride	µg/L	AC7093	7.02E+04	U
Iron	µg/L	SW6010B		
Lead	µg/L	SW6010B	2.02E+02	B
Manganese	µg/L	SW6010B	8.06E+02	
Mercury	µg/L	SW7470A	1.21E+03	
Nickel	µg/L	SW6010B	2.93E+03	
Nitrate	µg/L	AC7074		
Phosphorus	µg/L	SW6010B		
Potassium	µg/L	SW6010B		
Selenium	µg/L	SW6010B	2.4E+01	U
Silver	µg/L	SW6010B	2.22E+02	
Sodium	µg/L	SW6010B		
Sulfur	µg/L	SW6010B		
Thallium	µg/L	SW6010B	2E+01	U
Uranium	µg/L	AC7920	3.2E+02	U
Vanadium	µg/L	SW6010B	2.7E+01	B
Zinc	µg/L	SW6010B	2.27E+03	
Zirconium	µg/L	SW6010B		
UDS	µg/L	AC7972	5.0E+03	U
TIC	µg/L	AC8060	2.38E+04	U E
TOC	µg/L	SW9060	1.98E+04	U E

NWCF Decontamination Hold Tanks – NCD-123 & NCD-129 (con't.)

Volatile Organic Compounds and Semi-volatile Organic Compounds

Analyte	Units	Method Number	Sample Log # 9902101		Sample Log # 9904021		Sample Log # 9906171		Sample Log # 0104176	
			Results	LQF	Results	LQF	Results	LQF	Results	LQF
Semi-Volatile Organic Compounds										
2,4-Dinitrophenol	µg/L	SW8270C	7.6E+01	M	2.5E+01	U M	2.6E+01	M	2E+01	U M
2,4-Dinitrotoluene	µg/L	SW8270C	2.5E+01	U	2.5E+01	U	2E+01	U	2E+01	U
2,6-Dinitrotoluene	µg/L	SW8270C	2.5E+01	U	2.5E+01	U	2E+01	U	2E+01	U
4-Nitrophenol	µg/L	SW8270C	2.5E+01	U	2.5E+01	U	2E+01	U	2E+01	U
4,6-Dinitro-2-methylphenol	µg/L	SW8270C	2.5E+01	U	2.5E+01	U M	2E+01	U M	2E+01	U M
Bis-(2-ethylhexyl) phthalate	µg/L	SW8270C	4.7E+01		2.5E+01	U	2E+01	U	2E+01	U
Butylbenzyl phthalate	µg/L	SW8270C	2.5E+01	U	2.5E+01	U	2E+01	U	2E+01	U
Diethylphthalate	µg/L	SW8270C	2.5E+01	U M	2.5E+01	U M	2E+01	U	2E+01	U M
Di-n-octyl phthalate	µg/L	SW8270C	2.5E+01	U	2.5E+01	U Z	2E+01	U	2E+01	U
Nitrobenzene	µg/L	SW8270C	2.5E+01	U	2.5E+01	U	2E+01	U M	2E+01	U M
n-Nitrosodimethylamine	µg/L	SW8270C	2.5E+02	U D	2.5E+01	U M	2E+01	U	2E+01	U
Pyridine	µg/L	SW8270C	2.5E+02	U D	2.5E+01	U	2E+01	U	2E+01	U
Tri-n-butyl phosphate	µg/L	SW8270C	2.5E+01	U M	2.5E+01	U M	2E+01	U	2E+01	U M
Volatile Organic Compounds										
1,1-Dichloroethane	µg/L	SW8260A	5E+01	U D H	1E+01	U M	1E+01	U	1E+01	U
1,1,1-Trichloroethane	µg/L	SW8260A	5E+01	U D H	1E+01	U	1E+01	U	1E+01	U
2-Butanone	µg/L	SW8260A	5E+01	U D H	1E+01	U	1E+01	U	1E+01	U
2-Hexanone	µg/L	SW8260A	5E+01	U D H	5E+01	U M	1E+01	U	1E+01	U
4-Methyl-2-pentanone	µg/L	SW8260A	5E+01	U D H	5E+01	U M Z	1E+01	U	1E+01	U
Acetone	µg/L	SW8260A	1.3E+01	J D H M	1E+01	U	8E00	J B M	1.4E+01	
Benzene	µg/L	SW8260A	5E+01	U D H M	1E+01	U M	1E+01	U M	1E+01	U
Bromodichloromethane	µg/L	SW8260A	5E+01	U D H	1E+01	U	1E+01	U	1E+01	U
Bromoform	µg/L	SW8260A	5E+01	U D H	2E+01	U Z	1E+01	U	1E+01	U
Bromomethane	µg/L	SW8260A	5E+01	U D H M	1E+01	U M	1E+01	U M	1E+01	U
Carbon disulfide	µg/L	SW8260A	5E+01	U D H	1E+01	U	1E+01	U	1E+01	U
Carbon tetrachloride	µg/L	SW8260A	5E+01	U D H	1E+01	U	1E+01	U	1E+01	U
Chloroform	µg/L	SW8260A	5E+01	U D H	1E+01	U	1E+01	U	1E+01	U
Chloromethane	µg/L	SW8260A	5E+01	U D H	2E+01	U M Z	1E+01	U	1E+01	U M
Dibromochloromethane	µg/L	SW8260A	5E+01	U D H	1E+01	U	1E+01	U	1E+01	U
Dichloromethane	µg/L	SW8260A	5E+01	U D H	1E+01	U M	1E+01	U	1E+01	U
Styrene	µg/L	SW8260A	5E+01	U D H M	2E+01	U M Z	1E+01	U M	1E+01	U
Trichlorofluoromethane	µg/L	SW8260A	5E+01	U D H	1E+01	U	1E+01	U	1E+01	U
Tentatively Identified Organic Compounds										
no. Ided / total conc.	µg/L		20 / 1.03E+04	SVOCs only	6 / 2.21E+02		12 / 3.99E+02	SVOCs only	5 / 3.05E+02	SVOCs only

NWCF Decontamination Hold Tanks – NCD-123 & NCD-129 (con't.)

Volatile Organic Compounds and Semi-volatile Organic Compounds (con't.)

Analyte	Units	Method Number	Sample Log # 0107021							
			Results	LQF	Results	LQF	Results	LQF	Results	LQF
Semi-Volatile Organic Compounds										
2,4-Dinitrophenol	µg/L	SW8270C	2E+01	U H M						
2,4-Dinitrotoluene	µg/L	SW8270C	2E+01	U H						
2,6-Dinitrotoluene	µg/L	SW8270C	2E+01	U H						
4-Nitrophenol	µg/L	SW8270C	2E+01	U H M						
4,6-Dinitro-2-methylphenol	µg/L	SW8270C	2E+01	U H M						
Bis-(2-ethylhexyl) phthalate	µg/L	SW8270C	2E+01	U H						
Butylbenzyl phthalate	µg/L	SW8270C	2E+01	U H						
Diethylphthalate	µg/L	SW8270C	2E+01	U H M						
Di-n-octyl phthalate	µg/L	SW8270C	2E+01	U H						
Nitrobenzene	µg/L	SW8270C	2E+01	U H						
n-Nitrosodimethylamine	µg/L	SW8270C	2E+01	U H						
Pyridine	µg/L	SW8270C	2E+01	U H						
Tri-n-butyl phosphate	µg/L	SW8270C								
Volatile Organic Compounds										
1,1-Dichloroethane	µg/L	SW8260A	1E+01	U						
1,1,1-Trichloroethane	µg/L	SW8260A	1E+01	U						
2-Butanone	µg/L	SW8260A	1E+01	U						
2-Hexanone	µg/L	SW8260A	1E+01	U						
4-Methyl-2-pentanone	µg/L	SW8260A	1E+01	U						
Acetone	µg/L	SW8260A	1E+01	U						
Benzene	µg/L	SW8260A	1E+01	U						
Bromodichloromethane	µg/L	SW8260A	1E+01	U						
Bromoform	µg/L	SW8260A	1E+01	U						
Bromomethane	µg/L	SW8260A	1E+01	U						
Carbon disulfide	µg/L	SW8260A	1E+01	U						
Carbon tetrachloride	µg/L	SW8260A	1E+01	U						
Chloroform	µg/L	SW8260A	1E+01	U						
Chloromethane	µg/L	SW8260A	1E+01	U M						
Dibromochloromethane	µg/L	SW8260A	1E+01	U						
Dichloromethane	µg/L	SW8260A	6E00	J B M						
Styrene	µg/L	SW8260A	1E+01	U						
Trichlorofluoromethane	µg/L	SW8260A	1E+01	U						
Tentatively Identified Organic Compounds										
no. Ided / total conc.	µg/L		3 / 9.3E+01	SVOCs only						

Log Search

Date of Search: 2003-06-16 13:42:09.522 Run by: JEFF LONG

****

Search Criteria:

Start Log.....:980624 1
End Log.....:980624 1
Log Approval.:ALL Logs
Result Type..:All Entries
Lab/Group....:ALL Groups
Name Column..:Lab Sample ID

Total # Logs Found...: 1
Total # Results Found: 9

****

Log # / Idx	Lab ID	Request Name / Meth #	Log Type / Lab / Analyst	Analyte	ARL	Charge Num / Result	Log Approval Info
980624-1	WL-133		PLANT			56161B201	011010 16:29 KIMBERLY A WHITEH
1	8BP53	57171	7BGP	CHLORIDE	A..	5.1E+01 +- 1.6E+01	ug/mL
2	8BP53	57093	7BGP	FLUORIDE	A..	8.49E+01 +- 6.2E+00	ug/mL
3	8BP53	97074	7BCS	NITRATE	A..	6.58E-01 +- 8.0E-02	Molar
4	8BP53	97168	7BCS	SULFATE	A..	2.61E+02 +- 2.2E+01	ug/ml
5	8BP53	87100	7BCS	ALUMINUM	A..	3.61E-02 +- 1.2E-03	MOLAR
6	8BP53	57015	7BGP	ACID	A..	4.0E-01 +- 1.8E-01	Normal Acid
7	8BP53	47981	7BGP	SPGR	A..	1.02375E+00 +- 6.6E-05	@ 25/4
8	8BP53	17920	7BCS	URANIUM	A..	3.42E-03 +- 3.3E-04	G/L
9	8BP53	17972	7BGP	UDS	A..	43.524	G/L

********** END **********

Log Search

Date of Search: 2003-06-16 13:44:19.946 Run by: JEFF LONG

****

Search Criteria:

Start Log.....:960928 1
End Log.....:960928 1
Log Approval.:ALL Logs
Result Type..:All Entries
Lab/Group....:ALL Groups
Name Column..:Lab Sample ID

Total # Logs Found...: 1
Total # Results Found: 98

****

Log # Idx	Lab ID	Request Name Meth #	Log Type Lab	Ana-lyst	Analyte	ARL	Charge Num / Result	Log Approval Info
960928-1		WL-133CONDC	RCRA				522020702	Not Approved
1	6CX56	57012	7RAH		ACID	A..	5.274E-01 +- 8.6E-03	Normal Acid
2	6CX56	57012	7RAH		ACID	A..	5.255E-01 +- 8.6E-03	Normal Acid
3	6CX57	87100	7BCS		ALUMINUM	A..	2.93E-03 +- 3.9E-04	MOLAR
					BORON	A..	< 1.16162E-03	MOLAR
					IRON	A..	6.8E-04 +- 2.3E-04	MOLAR
					ZIRCONIUM	A..	< 1.00485E-03	MOLAR
					CALCIUM	A..	1.17E-03 +- 1.2E-04	MOLAR
4	6CX56	11023	1BCS		AL/F RATIO	A..	Ratio Not Performed	
5	6CX56	57171	7RAH		CHLORIDE	A..	< 2.55951E+01	ug/ml
6	6CX56	57093	7RAH		FLUORIDE	C..	Canceled Entry	
7	6CX58	17985	7BCS		FLASH POIN	A..	NO FLASH @ 60.00	deg C corrected
8	6CX58	17985	7BCS		FLASH POIN	A..	NO FLASH @ 60.00	deg C corrected
9	6CX56	87970	7BCS		GROSS BETA	C..	Canceled Entry	
10	6CX56	17802	7BCS		MERCURY	C..	Canceled Entry	
11	6CX56	97168	7BCS		SULFATE	A..	< 1.84443E+01	uG/mL
12	6CX56	67920	7RLC		URANIUM	A..	< 2.4629E-03	G/L
13	6CX56	67920	7RLC		URANIUM	A..	< 2.4629E-03	G/L
14	6CX56	7972	7		UDS	C..	Canceled Entry	
15	6CX57	22800	2SDN		SODIUM	A..	3.1077E+02	ug/mL
					POTASSIUM	A..	5.6475E+01	ug/mL
16	6CX56	97074	7BCS		NITRATE	C..	Canceled Entry	
17	6CX56	13202	3IDG		PU239	A..	5.7E+01 +- 1.2E+01	d/s/ml
					PU238	A..	2.40E+03 +- 2.6E+02	d/s/ml
18	6CX56	13993	3MLE		CS137	A..	1.025E+05 +- 7.1E+03	d/s/ml
					EU154	A..	6.79E+02 +- 6.3E+01	d/s/ml
					NB94	A..	3.07E+02 +- 3.2E+01	d/s/ml
					RU106	A..	2.15E+03 +- 2.1E+02	d/s/ml
					SB125	A..	9.79E+03 +- 4.9E+02	d/s/ml
19	6CX56	13011	3WDT		TRITIUM	A..	5.09528E+03 +- 1.2E-01	D/S/ML
20	6CX56	13011	3WDT		TRITIUM	A..	5.25961E+03 +- 1.3E-01	D/S/ML

Log Idx	# Lab ID	Request Name Meth #	Log Type Lab	Ana-lyst	Analyte	ARL	Charge Num Log Approval Info Result
21	6CX56	23381	3	BJS	TOTAL SR	A..	2.49E+03 +- 2.3E+02 D/S/ML
22	6CX56	3539	3		IODINE	C..	Canceled Entry
23	6CX56	57017	7	RAH	PH	A..	6.6E-01 +- 1.3E-01 pH
24	6CX56	57017	7	RAH	PH	A..	6.2E-01 +- 1.3E-01 pH
25	6CX57	32900	7	CBG	ANTIMONY	A..	8.05E+02 ug/L
					ARSENIC	A..	Not Detected: MDL= 795.0 ug/L
					BARIUM	A..	6.0E+02 ug/L
					BERYLLIUM	A..	7.65E+02 ug/L
					CADMIUM	A..	3.8775E+03 ug/L
					CHROMIUM	A..	1.1225E+03 ug/L
					LEAD	A..	8.5975E+03 ug/L
					NICKEL	A..	1.47E+03 ug/L
					SELENIUM	A..	1.3075E+03 ug/L
					SILVER	A..	1.25E+02 ug/L
					THALLIUM	A..	2.815E+03 ug/L
26	6CX57	32900	7	CBG	ANTIMONY	A..	4.725E+02 ug/L
					ARSENIC	A..	Not Detected: MDL= 795.0 ug/L
					BARIUM	A..	6.0E+02 ug/L
					BERYLLIUM	A..	7.875E+02 ug/L
					CADMIUM	A..	4.0725E+03 ug/L
					CHROMIUM	A..	1.305E+03 ug/L
					LEAD	A..	8.3225E+03 ug/L
					NICKEL	A..	1.3475E+03 ug/L
					SELENIUM	A..	8.65E+02 ug/L
					SILVER	A..	Not Detected: MDL= 37.5 ug/L
					THALLIUM	A..	3.39E+03 ug/L
27	6CX61	32900	7	CBG	ANTIMONY	A..	5.6E+01 ug/L
					ARSENIC	A..	1.068E+02 ug/L
					BARIUM	A..	4.8E+01 ug/L
					BERYLLIUM	A..	6.28E+01 ug/L
					CADMIUM	A..	5.0E+00 ug/L
					CHROMIUM	A..	1.78E+01 ug/L
					LEAD	A..	Not Detected: MDL= 39.0 ug/L
					NICKEL	A..	Not Detected: MDL= 10.2 ug/L
					SELENIUM	A..	1.61E+02 ug/L
					SILVER	A..	1.046E+02 ug/L
					THALLIUM	A..	Not Detected: MDL= 129.0 ug/L
28	6CX57	12800	2	SDN	MERCURY	A..	30.1 mg/L
29	6CX57	12800	2	SDN	MERCURY	A..	30.6 mg/L
30	6CX61	12800	2	SDN	MERCURY	A..	Not Detected: MDL= 2.0 ug/L
31	6CX58	8060	8		TOC	C..	Canceled Entry
32	6CX58	18060	8	BGP	TOC	A..	5.28462E+02 ug/ml
					TOC(r)	C..	Canceled Entry
33	6CX62	18060	8	BGP	TOC	A..	Not enough sample to run a dup.
34	6CX59	19260	9	HCJ	VOA	A..	SEE ATTACHED
35	6CX59	19260	9	HCJ	VOA	A..	SEE ATTACHED
36	6CX60	19260	9	HCJ	VOA	A..	SEE ATTACHED
37	6CX58	19270	9	JXJ	SVOA	...	Data Not Approved Yet
38	6CX58	19270	9	JXJ	SVOA	...	Data Not Approved Yet

Log Id x	# Lab ID	Request Name Meth #	Log Type Lab	Ana-lyst	Analyte	ARL	Charge Num Result	Log Approval Info
39	6CX62	19270	9JXJ	SVOA		...	Data Not Approved Yet	
40	6CX56	87980	7BCS	SPGR		A..	1.01886E+00 @ 25/4	
41	6CX56	87980	7BCS	SPGR		A..	1.02496E+00 @ 25/4	
42	6CX56	87980	7BCS	SPGR		A..	1.02496E+00 @ 25/4	
43	6CX56	87970	7BCS	GROSS BETA		A..	2.441E+07 +- 6.7E+05 B/Min/mL	
44	6CX56	97074	7BCS	NITRATE		A..	4.94E-01 +- 1.7E-02 Molar	
45	6CX56	57093	7RAH	FLUORIDE		C..	Canceled Entry	
46	6CX56	57093	7RAH	FLUORIDE		A..	< 8.72116E+00 uG/mL	
47	6DM47	32900	7CBG	ANTIMONY		C..	Canceled Entry	
					ARSENIC	C..	Canceled Entry	
					BARIUM	C..	Canceled Entry	
					BERYLLIUM	C..	Canceled Entry	
					CADMIUM	C..	Canceled Entry	
					CHROMIUM	C..	Canceled Entry	
					LEAD	C..	Canceled Entry	
					NICKEL	C..	Canceled Entry	
					SELENIUM	C..	Canceled Entry	
					SILVER	C..	Canceled Entry	
					THALLIUM	C..	Canceled Entry	

********** END **********

Log Search

Date of Search: 2003-06-16 14:07:00.293 Run by: JEFF LONG

****

Search Criteria:

Start Log.....:800101 1
End Log.....:801231 15
Log Approval.:ALL Logs
Result Type..:All Entries
Lab/Group....:ALL Groups
Name Column..:Lab Sample ID
Request Name..:*WL-102*

Total # Logs Found...: 1
Total # Results Found: 12

****

Log # Id x	Lab ID	Request Name Meth #	L a b	Ana-lyst	Log Type Analyte	Charge Num ARL	Log Approval Info Result
800616-9	WL-102					13301-240-412	Unapproved by
34	WL-102	5971		CLD	GROSS-B ...		+- 1.34437E+06+-41010.6 B/MIN/ML
35	WL-102	3993		LEE	GAMMA SCAN ...		ATTACHED
36	WL-102	11000		JGJ	SODIUM ...		4.32 & 4.34 G/L
37	WL-102	11000		JGJ	POTASSIUM ...		1.04 & 1.02 G/L
38	WL-102	5171		JMR	CHLORIDE ...		+- 126.404+-8.97287 UG/ML
39	WL-102	5092		BLH	FLUORIDE ...		+- 127.292+-5.89728 UG/ML
40	WL-102	5071		NWH	NITRATE ...		+- .736395+-2.93917E-02 MOLAR
41	WL-102	11000		HAS	SEMI-QUANT ...		ATTACHED
42	WL-102	5015		BLH	ACID ...		+- .473127+-2.07193E-02 NACID
43	WL-102	6981		CLD	SP-GR ...		+- 1.0297+-4.28787E-04
66	WL-102	5961		DBB	NA/K ...		
67	WL-102	5961		DBB	SEMI-QUANT ...		

********** END **********

EXXON NUCLEAR IDAHO COMPANY, Inc.

Internal Correspondence

Date: October 5, 1983

To: W. B. Palmer WBP

From: D. W. Rhodes/Rhod-17-83 DW Rhodes

Subject: Composition of PEW Evaporator Feed, Condensate and Bottoms

Distribution:
D. R. Alexander
B. R. Dickey
G. W. Hogg
J. E. Johnson
G. E. Lohse
L. W. McClure
W. A. Mickelson
R. E. Mizia
E. P. Mondok
P. I. Nelson
A. P. Roeh
R. E. Schindler
M. D. Staiger
M. C. Swenson
F. S. Ward
D. W. Rhodes-2

During the period August 5 through August 11, 1983, a sampling program was completed to help define the concentrations of chemicals and radionuclides in PEW feed, condensate and bottoms while the NWCF was operating.* The results of similar sampling programs were reported earlier in (1) Rhod-6-81 (uranium recovery process operating) and (2) Rhod-1-81 (WCF operating).

The feed solution to the evaporator during the test consisted of waste from tanks WG-100(2), WH-101, WC-119, NCD-123, WL-104, and SFE-106. The waste solutions from the PEW-CFD tanks, WG-100 and WH-101, were analyzed as a composite. The condensate samples from WL-107(2), WL-163, and WL-106 were also analyzed as a composite. The results are given in Tables I, II, and III. No interpretation of the results was attempted, since each user has a different need. If you have any questions, please contact me at 6-3080.

---

*The uranium extraction systems were not operating and the Rover burner operated only one day during the sampling period.

rls

Table I

Chemical Composition of PEW Evaporator Feed Solutions, Condensate and Bottoms

		Vessel Number						
Component	Unit	WG-100 WH-101	WC-119	NCD 123	WL-104	SFE-106	WL-613	WL-106 WL-107 WL-163
Cl	mg/L	67	135	97	83	195	2435	43
F		16	29	296	1424	0.9	1777	47
SO_4		83	12	42	104	24	6336	< 1
Hg		0.2	6.8	4E-3	0.7	2E-3	1201	7.7
Al		240	9.6	14	460	100	2700	ND
B		ND	3.9	ND	20	ND	1800	< 2
Ca		11	37	230	160	250	18000	1
Cr		ND	0.6	52	2.6	ND	580	< 0.4
Fe		ND	3.4	39	13	16	1100	0.7
Mg		19	8.4	160	55	27	1800	0.3
Mn		ND	0.3	1500	0.6	2.4	7000	ND
Mo		ND	ND	ND	6.6	ND	ND	ND
Na		620	10	6110	185	488	110000	0.2
Ni		ND	< 0.1	ND	ND	1.4	48	ND
Pb		ND	ND	21	35	ND	470	ND
Si		< 20	3.8	71	44	29	430	< 0.2
K		23	3	1927	79	8	26000	9
Ti		ND	ND	12	3.3	ND	ND	ND
Zn		ND	1	ND	ND	ND	39	ND
NO_3		13640	20646	5580	4588	2728	556000	5270
pH		1.38	0.77	12.5	1.48	2.34	0.55	1.23

ND = Not Detected

Table II

Sources of Waste Solutions During Boildown Test*

Date	Feed Source	Gallons	Tank	Condensate Batch No.	Gallons
7-5	WG-100	2650	WL-107	227	4000
7-6	SFE-106	1250	WL-163	228	4000
7-7	WC-119	2100	WL-106	229	4000
7-7	WH-101	2900	WL-107	230	4000
7-10	NCD-123	2700			16000
7-11	WG-100	2550			
7-11	WL-104	700	WL-613	Evaporator Bottoms	200
	Total	14850			16200

*The difference between the feed volume and the volume of condensate plus evaporator bottoms is 16200-14850=1350 gal. This difference is due to the input of small volumes of water from a variety of sources (VOG loop seals, off-gas drains, pump priming, etc.), that are not measured, as well as instrument and/or reading errors.

Table III

Radiochemical Composition of PEW Evaporator Feed Solutions, Condensate and Bottoms

		Vessel Number						
Component	Unit	WG-100 WH-101	WC-119	NCD 123	WL-104	SFE-106	WL-613	WL-106 WL-107 WL-163
Total U	mg/L	2.3	<0.055	<0.055	3.9	0.22	217	<0.055
I-129	µCi/mL	6.3E-6	1.7E-4	3.1E-6	5.5E-6	2.9E-5	2.1E-4	8.2E-6
Ce-144		6.1E-3	9.8E-2	6.5E-5	ND	5.8E-4	1.2	5.4E-7
Co-60		3.2E-4	5.5E-5	6.6E-4	1.5E-4	6.3E-4	2.7E-2	ND
Cs-134		6.3E-4	1.5E-2	ND	7.1E-4	ND	0.17	2.8E-7
Cs-137		2.6E-2	1.6E-1	5.7E-4	1.9E-2	3.7E-4	2.73	5.2E-6
Eu-152		ND	ND	ND	ND	1.8E-2	0.16	ND
Eu-154		ND	1.1E-3	ND	ND	1.4E-2	0.13	ND
Eu-155		ND	6.0E-4	ND	5.9E-4	3.1E-3	4.7E-2	ND
Ru-106		0.29	1.0E-2	2.3E-3	1.9E-2	ND	3.9	4.3E-5
Sr-90		3.3E-2	0.10	7.7E-6	3.3E-3	1.2E-2	3.5	1.9E-6
Sb-125		6.1E-3	1.8E-3	5.7E-5	3.9E-2	ND	0.45	4.1E-6
Mn-54		ND	ND	ND	4.9E-5	ND	ND	ND
Pr-144		6.1E-3	9.8E-2	6.5E-5	ND	5.8E-4	1.2	5.4E-7
Y-90		3.3E-2	0.10	7.7E-6	3.3E-3	1.2E-2	3.5	1.9E-6
H-3		1.7E-3	0.26	1.5E-4	3.0E-3	3.6E-4	2.1E-2	4.0E-2
Nb-95		ND	5.6E-4	2.1E-5	ND	ND	9.7E-2	8.2E-7
K-40		ND	ND	ND	ND	1.3E-3	ND	ND
Zr-95		ND	1.0E-3	ND	ND	ND	8.6E-2	ND

ND = Not Detected

6153.101.2

COVER PAGE

1. SDG Transmittal Date: 5/15/01

2. Subcontractor Name: INTEC ANALYTICAL CHEMISTRY LABORATORY
   Analytical Laboratories Department
   Bechtel BWXT Idaho, LLC

3. Contract Number: ER-SOW-169

4. SDG Type: Volatile Organics by GC/MS

5. Reporting Tier: Tier II

Original
EP10060101
WM-186-010307-02
Entered 5/[illegible]

6. SDG Number: WM-186-010307

7. SAP Number: N/A

8. Applicable TOS Modification Numbers: N/A

Jeffrey L. Jeter
Acting ALD Organic Analyses Supervisor — Date: 5/15/01

Shelly J. Sailer
ALD Quality Assurance Officer — Date: 5/15/01

Jeffrey L. Jeter
Volatile Analyses Technical Leader — Date: 5/15/01

ORIGINAL

TOTAL VOC ANALYSIS DATA SHEET

Idaho National Engineering and Environmental Laboratory

Analytical Laboratories Department

Lab Code:	ALDINTEC	Contract Number:	NA
TOS Number:	NA	SDG Number:	WM-186-010307
ALD Report Number:	0103072	Analytical Batch No:	0103072
Field Sample ID:	WM-186-010307-TB	Method Number:	9260
Matrix:	WATER	Lab Sample ID:	1AM76
Sample wt/vol:	5 mL	Lab File ID:	SV102644
Level (low/med):	Low	Date Sampled:	03/07/2001
%Solid:	0	Date Received:	03/08/2001
GC Column:	VOCOL ID: 0.250 (mm)	Date Extracted:	
Soil Extract Volume:	N/A	Date Analyzed:	03/21/2001
Soil Aliquot Volume:	N/A	Dilution Factor:	1

CAS #	COMPOUND	CONCENTRATION (ug/L)	Q
74-87-3	Chloromethane	10	U
75-01-4	Vinyl Chloride	10	U
74-83-9	Bromomethane	10	U
75-00-3	Chloroethane	10	U
75-69-4	Trichlorofluoromethane	10	U
75-35-4	1,1-Dichloroethene	10	U
76-13-1	1,1,2-Trichloro-1,2,2-trifluoroethane	10	U
75-15-0	Carbon Disulfide	10	U
67-64-1	Acetone	20	UZY
75-09-2	Methylene Chloride	20	UZY
156-60-5	trans-1,2-Dichloroethene	10	U
75-34-3	1,1-Dichloroethane	10	U
156-59-2	cis-1,2-Dichloroethene	10	U
78-93-3	2-Butanone	10	U
67-66-3	Chloroform	10	U
71-55-6	1,1,1-Trichloroethane	10	U
56-23-5	Carbon Tetrachloride	10	UM
71-43-2	Benzene	10	U
107-06-2	1,2-Dichloroethane	20	UMZ
79-01-6	Trichloroethene	10	U

TOTAL VOC ANALYSIS DATA SHEET

Idaho National Engineering and Environmental Laboratory

Analytical Laboratories Department

Lab Code:	ALDINTEC	Contract Number:	NA
TOS Number:	NA	SDG Number:	WM-186-010307
ALD Report Number:	0103072	Analytical Batch No:	0103072
Field Sample ID:	WM-186-010307-TB	Method Number:	9260
Matrix:	WATER	Lab Sample ID:	1AM76
Sample wt/vol:	5 mL	Lab File ID:	SV102644
Level (low/med):	Low	Date Sampled:	03/07/2001
%Solid:	0	Date Received:	03/08/2001
GC Column:	VOCOL ID: 0.250 (mm)	Date Extracted:	
Soil Extract Volume:	N/A	Date Analyzed:	03/21/2001
Soil Aliquot Volume:	N/A	Dilution Factor:	1

CAS #	COMPOUND	CONCENTRATION (ug/L)	Q
78-87-5	1,2-Dichloropropane	10	U
75-27-4	Bromodichloromethane	10	U
10061-01-5	cis-1,3-Dichloropropene	10	U
108-10-1	4-Methyl-2-Pentanone	20	UZ
108-88-3	Toluene	10	U
10061-02-6	trans-1,3-Dichloropropene	10	U
79-00-5	1,1,2-Trichloroethane	10	U
127-18-4	Tetrachloroethene	10	U
591-78-6	2-Hexanone	20	UMZ
124-48-1	Dibromochloromethane	10	U
108-90-7	Chlorobenzene	10	U
100-41-4	Ethylbenzene	10	U
108-38-3	m-xylene and 106-42-3 p-xylene	20	U
95-47-6	o-Xylene	10	U
100-42-5	Styrene	10	U
75-25-2	Bromoform	10	U
79-34-5	1,1,2,2-Tetrachloroethane	20	UMZ

TOTAL VOC ANALYSIS DATA SHEET
TENTATIVELY IDENTIFIED COMPOUNDS

Idaho National Engineering and Environmental Laboratory

Analytical Laboratories Department

Lab Code:	ALDINTEC	Contract Number:	NA
TOS Number:	NA	SDG Number:	WM-186-010307
ALD Report Number:	0103072	Analytical Batch No:	0103072
Field Sample ID:	WM-186-010307-TB	Method Number:	9260
Matrix:	WATER	Lab Sample ID:	1AM76
Sample wt/vol:	5 mL	Lab File ID:	SV102644
Level (low/med):	Low	Date Sampled:	03/07/2001
%Solid:	0	Date Received:	03/08/2001
GC Column:	VOCOL ID: 0.250 (mm)	Date Extracted:	
Soil Extract Volume:	N/A	Date Analyzed:	03/21/2001
Soil Aliquot Volume:	N/A	Dilution Factor:	1

Number of TICs Found: 0

	CAS Number	Tentatively Identified VOCs	Concentration (ug/L)	Q	Retention Time (min)
1		None			

- 021/15

C6153.101.

COVER PAGE

1.	**Transmittal Date:**	04/26/01
2.	**Subcontractor Name:**	INTEC Analytical Chemistry Laboratory Analytical Laboratories Department Bechtel BWXT Idaho, LLC
3.	**Contract Number:**	Not Applicable
4.	**SDG Type:**	Type- 1B
5.	**Reporting Tier:**	Tier-2
6.	**Delivery Schedule:**	Not Applicable
7.	**SDG Number:**	WM-186-010307
8.	**LTI Number:**	01-03072
9.	**TOS Number:**	Not Applicable
10.	**TOS Modification Number:**	Not Applicable
11.	**IDP Cost:**	Not Applicable
12.	**FSID Numbers:**	WM-186-010307 Metals
13.	**Billable QC Samples:**	None

Original
SDG: WM-186-010307
Sample: BP1006 0101

ORIGINAL

RCRA METALS ANALYSIS DATA SHEET Page 1 of 1

Lab Name: INEEL - ACL Lab Code: ALDCPP Contract:BOP

TOS # : NA LTI # : 0103072 SDG # :WM-186-010307

Matrix : WATER Date Received: 03/07/2001

Field Sample ID#: WM-186-010307 Lab Sample ID#: 1AM75

Sample Preparation Method(s) SEE NARRATIVE

% Solids: 0.0 (NA)

Concentration Units (ug/L or mg/kg wet weight basis): UG/L

CAS No.	Analyte	Concentration	C	Q	M	V
7429-90-5	ALUMINUM	6.87E+06			P	
7440-36-0	ANTIMONY	2.73E+02	U		P	
7440-38-2	ARSENIC	5.45E+02	B		P	
7440-39-3	BARIUM	3.03E+03			P	
7440-41-7	BERYLLIUM	4.04E+01	B		P	
7440-43-9	CADMIUM	1.39E+05			P	
7440-47-3	CHROMIUM	2.16E+05			P	
7440-48-4	COBALT	1.20E+03			P	
7440-50-8	COPPER	4.08E+04			P	
7439-92-1	LEAD	1.02E+05			P	
7439-96-5	MANGANESE	6.85E+05			P	
7439-97-6	MERCURY	2.60E+05			CV	
7440-02-0	NICKEL	8.99E+04			P	
7782-49-2	SELENIUM	3.03E+02	B		P	
7440-22-4	SILVER	2.83E+02	B		P	
7440-28-0	THALLIUM	3.84E+02	U		P	
7440-62-2	VANADIUM	5.96E+02	B		P	
7440-66-6	ZINC	2.59E+04			P	

Cas No. Chemical Abstracts Service Registry Number;
C = concentration qualifier code; Q = data qualifier Code;
M = method qualifier code; V = validation qualifier Code;

Comments:

SDG TYPE-1B FORM #1 SOW156

6153.101.2C

Original
WM-186-0103072-1
BP:001001 01
Entered 6/4/2001

DATA REPORT COVER PAGE

1.	**Transmittal Date:**	May 31, 2001
2.	**Subcontractor Name:**	INTEC Analytical Chemistry Laboratory Analytical Laboratories Department BECHTEL BWXT LLC, Idaho
3.	**Contract Number:**	PLN-613
4.	**SDG Type:**	Type – 3
5.	**Reporting Tier:**	Tier – 2
6.	**Delivery Schedule:**	Not Applicable
7.	**SDG Number:**	WM-186-0103072
8.	**LTI Number:**	0103072
9.	**TOS Number:**	Not Applicable
10.	**TOS Modification Number:**	Not Applicable
11.	**IDP Cost:**	Internal BBWI charge number credited with all applicable work hours performed.
12.	**FSID Numbers:**	WM-186-010307
13.	**Billable QC Samples:**	None

ORIGINAL

000001/2

MISCELLANEOUS CLASSICAL ANALYSIS DATA SHEET Page 1 of 1

Lab Name: INEEL - ACL Lab Code: ALDCPP Contract:ER SOW

TOS # : NA LTI # : 0103072 SDG # :WM-186-010307 2

Matrix : WATER Date Received: 03/08/2001

Field Sample ID#: WM-186-010307 Lab Sample ID#: 1AM75

% Solids: N/A

Analyte	Concentration	UNITS	C	Q	METHOD	V
ACID	1.5	N ACID			ACMM 7012	
FLUORIDE	2970	MG/L	U		ACMM 7093	
TIC	119	MG/L	U	E	ACMM 8060	
TOC	562	MG/L			USEPA 9060	
UDS	0.0	MG/L			ACMM 7972	
URANIUM	101	MG/L			ACMM 7920	

C = concentration qualifier code; Q = data qualifier Code;
V = validation qualifier Code;
Comments:

SDG TYPE-3 FORM #1 SOW156

F I N A L R E P O R T for WM-186 SOLIDS

Log Type: ** TECHNICAL **

Report for : T.G. GARN
Mailstop : 5218
Log Number : 01-05245
Phone Number : 6-7196

Date Received : May 24 2001
Time Received : 16:26
Date Approved : Feb 11 2002
Time Approved : 10:26

GWA charged : 561DTA101
Reviewed by TIFFANY PARK

MSA mR/hr : WARM
Signature _____

Hazard Index : 1E4
Laboratory QA Review

PCBs >50 ppm : NO
Signature _____

COMMENTS:

Analysis	Lab Spl ID	Field Spl ID	Method	Analyst	Results
Aluminum	1BF85	WM-186 SOLID LIB	42900	RHH	2.23659E+00 wt%
Am241	1BF85	WM-186 SOLID LIB	13201	IDG	4.04E+03 +- 4.0E+02 d/s/g
Antimony	1BF85	WM-186 SOLID LIB	42900	RHH	Not Detected: IDL= 0.002292683 w
Arsenic	1BF85	WM-186 SOLID LIB	42900	RHH	Not Detected: IDL= 0.001414634 w
Barium	1BF85	WM-186 SOLID LIB	42900	RHH	1.5122E-03 wt%
Beryllium	1BF85	WM-186 SOLID LIB	42900	RHH	4.87805E-05 wt%
Boron	1BF86	WM-186 SOLID NAOH	42900	RHH	2.11091E-02 wt%
CURIUM-242	1BF85	WM-186 SOLID LIB	13960	IDG	3.19E+00+-2.10E+00 d/s/g
Cadmium	1BF85	WM-186 SOLID LIB	42900	RHH	4.06341E-02 wt%
Calcium	1BF85	WM-186 SOLID LIB	42900	RHH	4.67976E-01 wt%
Cerium	1BF85	WM-186 SOLID LIB	42900	RHH	Not Detected: IDL= 0.002780488 w
Cesium	1BF85	WM-186 SOLID LIB	12800	SDN	<.00114 wt%
Chloride	1BF87	WM-186 SOLID NACO	28202	NWJ	1.58766E+03 ug/g
Chromium	1BF85	WM-186 SOLID LIB	42900	RHH	7.78537E-02 wt%
Co60	1BF85	WM-186 SOLID LIB	33993	SJH	8.56E+04 +- 7.3E+03 pC/g
Cobalt	1BF85	WM-186 SOLID LIB	42900	RHH	Not Detected: IDL= 0.0004878049
Copper	1BF85	WM-186 SOLID LIB	42900	RHH	1.81951E-02 wt%
Cs134	1BF85	WM-186 SOLID LIB	33993	SJH	1.12E+05 +- 1.0E+04 pC/g
Cs137	1BF85	WM-186 SOLID LIB	33993	SJH	9.09E+07 +- 2.6E+06 pC/g
Curium-244	1BF85	WM-186 SOLID LIB	13960	IDG	3.45E+01+-8.93E+00 d/s/g
Eu154	1BF85	WM-186 SOLID LIB	33993	SJH	2.28E+05 +- 3.3E+04 pC/g
Fluoride	1BF87	WM-186 SOLID NACO	28201	NWJ	6.23088E+02 ug/g
Gadolinium	1BF85	WM-186 SOLID LIB	42900	RHH	1.41463E-03 wt%
Iron	1BF85	WM-186 SOLID LIB	42900	RHH	3.92683E-01 wt%
Lead	1BF85	WM-186 SOLID LIB	42900	RHH	3.03415E-02 wt%
Lithium	1BF86	WM-186 SOLID NAOH	42900	RHH	6.0E-04 wt%
Magnesium	1BF85	WM-186 SOLID LIB	42900	RHH	1.71024E-01 wt%
Manganese	1BF85	WM-186 SOLID LIB	42900	RHH	1.87171E-01 wt%
Mercury	1BF85	WM-186 SOLID LIB	12800	SDN	< 0.00013 Wt%
Molybdenum	1BF85	WM-186 SOLID LIB	42900	RHH	1.29268E-02 wt%
NB94	1BF85	WM-186 SOLID LIB	33993	SJH	2.77E+04 +- 2.1E+03 pC/g
Nickel	1BF85	WM-186 SOLID LIB	42900	RHH	5.37073E-02 wt%
Niobium	1BF85	WM-186 SOLID LIB	42900	RHH	2.57561E-02 wt%
Nitrate	1BF86	WM-186 SOLID NAOH	28204	NWJ	2.46185E+05 ug/g

Analysis	Lab Spl ID	Field Spl ID	Method	Analyst	Results
Np237	1BF85	WM-186 SOLID LIB	13204	IDG	3.21E+01 +- 4.8E+00 d/s/g
PHOSPHORUS	1BF85	WM-186 SOLID LIB	42900	RHH	2.4022E+00 wt%
PU238	1BF85	WM-186 SOLID LIB	13202	IDG	1.62E+05 +- 1.5E+04 d/s/g
PU239	1BF85	WM-186 SOLID LIB	13202	IDG	2.71E+04 +- 2.6E+03 d/s/g
Palladium	1BF85	WM-186 SOLID LIB	42900	RHH	1.74634E-02 wt%
Phosphate	1BF87	WM-186 SOLID NACO	28203	NWJ	5.51802E+04 ug/g
Potassium	1BF85	WM-186 SOLID LIB	12800	SDN	1.63 WT%
Ruthenium	1BF85	WM-186 SOLID LIB	42900	RHH	Not Detected: IDL= 0.001512195 w
Sb125	1BF85	WM-186 SOLID LIB	33993	SJH	2.97E+05 +- 1.8E+04 pC/g
Selenium	1BF85	WM-186 SOLID LIB	42900	RHH	Not Detected: IDL= 0.002341463 w
Silicon	1BF85	WM-186 SOLID LIB	42900	RHH	2.12561E+00 wt%
Silver	1BF85	WM-186 SOLID LIB	42900	RHH	4.05366E-02 wt%
Sodium	1BF85	WM-186 SOLID LIB	12800	SDN	5.28 WT%
Strontium	1BF85	WM-186 SOLID LIB	42900	RHH	1.31707E-03 wt%
Sulfate	1BF86	WM-186 SOLID NAOH	28205	NWJ	1.3994E+04 ug/g
Sulfur	1BF85	WM-186 SOLID LIB	42900	RHH	4.60146E-01 wt%
TCLP SAMPLE PREP	1BF84	WM-186 SOLID	17998	BGP	Done 6/12/01. Store at RAL stati
Thallium	1BF85	WM-186 SOLID LIB	42900	RHH	Not Detected: IDL= 0.00195122 wt
Tin	1BF85	WM-186 SOLID LIB	42900	RHH	1.13317E-01 wt%
Titanium	1BF85	WM-186 SOLID LIB	42900	RHH	4.80976E-02 wt%
Total Sr	1BF85	WM-186 SOLID LIB	23381	PAT	1.83E+05 +- 2.7E+04 D/S/G
Tritium	1BF85	WM-186 SOLID LIB	33011	WDT	1.71E+02 +- 2.3E+01 D/S/gram
U234	1BF85	WM-186 SOLID LIB	13209	IDG	1.08E+02+-2.91E+01 D/S/G
U235	1BF85	WM-186 SOLID LIB	13209	IDG	1.04E+01+-6.14E+00 D/S/G
U236	1BF85	WM-186 SOLID LIB	13209	IDG	1.23E+01+-6.46E+00 D/S/G
U238	1BF85	WM-186 SOLID LIB	13209	IDG	5.59E+00+-7.40E+00 D/S/G
Uranium	1BF85	WM-186 SOLID LIB	42900	RHH	2.37073E-02 wt%
Vanadium	1BF85	WM-186 SOLID LIB	42900	RHH	Not Detected: IDL= 0.0004878049
Zinc	1BF85	WM-186 SOLID LIB	42900	RHH	1.60488E-02 wt%
Zirconium	1BF85	WM-186 SOLID LIB	42900	RHH	1.91732E+00 wt%
End of Report --	64 results.				

Log Search

Date of Search: 2003-06-16 14:21:46.965 Run by: JEFF LONG

****

Search Criteria:

Start Log.....:961008 15
End Log.....:961008 15
Log Approval.:ALL Logs
Result Type..:All Entries
Lab/Group....:ALL Groups
Name Column..:Lab Sample ID

Total # Logs Found...: 1
Total # Results Found: 9

****

Log # Idx	Lab ID	Request Name / Meth #	Log Type / Lab	Ana-lyst	Analyte	ARL	Charge Num / Result	Log Approval Info
961008-15	WL-103		PLANT				522020702	961012 16:48 CLAYNE B GRIGG
1	6DC01	87092	7RAH		FLUORIDE	A..	2.40E+01 +- 1.7E+00 ug/ml	
2	6DC01	57171	7RAH		CHLORIDE	A..	< 1.25947E+01 ug/ml	
3	6DC01	97168	7BCS		SULFATE	A..	< 9.03652E+00 uG/mL	
4	6DC02	17168	7BCS		SULFATE	C..	Canceled Entry	
5	6DC01	17012	7RAH		ACID	A..	titrated less than .5ml	
6	6DC01	47981	7BCS		SPGR	A..	9.98685E-01 +- 2.6E-04 @ 25/4	
7	6DC01	17920	7RAH		URANIUM	A..	1.99E-02 +- 1.2E-03 G/L	
8	6DC01	17920	7RAH		URANIUM	A..	2.02E-02 +- 1.2E-03 G/L	
9	6DC01	87017	7RLC		PH	A..	2.46E+00 +- 1.6E-01 pH	

********** END **********

Log Search

Date of Search: 2003-06-16 14:22:11.754 Run by: JEFF LONG

****

Search Criteria:

Start Log.....:961214 1
End Log.....:961214 1
Log Approval.:ALL Logs
Result Type..:All Entries
Lab/Group.....:ALL Groups
Name Column..:Lab Sample ID

Total # Logs Found...: 1
Total # Results Found: 12

****

Log # Idx	Lab ID	Request Name / Meth #	Log Type / Lab Analyst	Analyte	ARL	Charge Num / Result	Log Approval Info
961214-1	WL-103		PLANT			522020702	970415 21:54 ALAN W OLAVESON
1	6EA76	87802	7KFM	MERCURY	A..	Not Detected: MDL=0.009 uG/mL	
2	6EA76	17929	7SRT	URANIUM PR	A..	2.0E+00 ml	
3	6EA76	87100	7RLC	ALUMINUM	A..	2.43E-03 +- 4.4E-04 MOLAR	
4	6EA76	24900	4DDJ	URANIUM.	A..	2.2E-02 g/kg	
				U234	A..	7.0E-03 WEIGHT %	
				U235	A..	7.2E-01 WEIGHT %	
				U236	A..	7.0E-03 WEIGHT %	
				U238	A..	9.93E+01 WEIGHT %	
5	6EA76	87970	7RLC	GROSS BETA	A..	5.0E+02 +- 1.1E+02 B/Min/ml	
6	6EA76	47981	7RLC	SPGR	A..	9.98734E-01 +- 2.6E-04 @ 25/4	
7	6EA76	17920	7KFM	URANIUM	A..	2.69E-02 +- 1.8E-03 G/L	
8	6EA76	17920	7KFM	URANIUM	A..	2.65E-02 +- 1.8E-03 G/L	

********** END **********

Log Search

Date of Search: 2003-06-16 14:22:33.887 Run by: JEFF LONG

****

Search Criteria:

Start Log.....:961008 16
End Log.....:961008 16
Log Approval.:ALL Logs
Result Type..:All Entries
Lab/Group....:ALL Groups
Name Column..:Lab Sample ID

Total # Logs Found...: 1
Total # Results Found: 9

****

Log # / Idx	Lab ID	Request Name / Meth #	Log Type / Lab / Analyst	Analyte	Charge Num / ARL	Log Approval Info / Result
961008-16	WL-104		PLANT		522020702	961223 15:11 JACQUIE S JANIBAG
1	6DC30	87092	7RAH	FLUORIDE	A..	3.49E+01 +- 1.7E+00 ug/ml
2	6DC30	57171	7RAH	CHLORIDE	A..	< 1.25947E+01 ug/ml
3	6DC30	97168	7BCS	SULFATE	A..	< 9.03652E+00 uG/mL
4	6DC30	17012	7RAH	ACID	A..	titrated less than .5 ml
5	6DC30	47981	7BCS	SPGR	A..	9.99012E-01 +- 2.6E-04 @ 25/4
6	6DC30	17920	7RAH	URANIUM	A..	2.35E-02 +- 1.3E-03 G/L
7	6DC30	87017	7RLC	PH	A..	2.75E+00 +- 1.6E-01 pH
8	6DC30	17920	7RAH	URANIUM	C..	Canceled Entry
9	6DC30	17920	7RAH	URANIUM	A..	2.23E-02 +- 1.6E-03 G/L

********** END **********

Log Search

Date of Search: 2003-06-16 14:22:54.612 Run by: JEFF LONG

****

Search Criteria:

Start Log.....:961214 2
End Log.....:961214 2
Log Approval.:ALL Logs
Result Type..:All Entries
Lab/Group.....:ALL Groups
Name Column..:Lab Sample ID

Total # Logs Found...: 1
Total # Results Found: 12

****

Log # Idx	Lab ID	Request Name / Meth #	Log Type / Lab Ana-lyst	Analyte	ARL	Charge Num / Result	Log Approval Info
961214-2	WL-104		PLANT			522020702	970415 22:30 ALAN W OLAVESON
1	6EA78	87802	7KFM	MERCURY	A..	Not Detected: MDL=0.009 uG/mL	
2	6EA78	87100	7RLC	ALUMINUM	A..	3.50E-03 +- 4.5E-04 MOLAR	
3	6EA78	87970	7RLC	GROSS BETA	A..	1.20E+03 +- 1.9E+02 B/Min/ml	
4	6EA78	24900	4DDJ	URANIUM.	A..	2.4E-02 g/kg	
				U234	A..	0.0E+00 WEIGHT %	
				U235	A..	7.0E-01 WEIGHT %	
				U236	A..	4.0E-03 WEIGHT %	
				U238	A..	9.93E+01 WEIGHT %	
5	6EA78	17929	7SRT	URANIUM PR	A..	2.0E+00 ml	
6	6EA78	47981	7RLC	SPGR	A..	9.98949E-01 +- 2.6E-04 @ 25/4	
7	6EA78	17920	7KFM	URANIUM	A..	2.60E-02 +- 1.8E-03 G/L	
8	6EA78	17920	7KFM	URANIUM	A..	2.43E-02 +- 1.7E-03 G/L	

********** END **********

Log Search

Date of Search: 2003-06-16 14:23:17.773 Run by: JEFF LONG

****

Search Criteria:

Start Log.....:970916 9
End Log.....:970916 9
Log Approval.:ALL Logs
Result Type..:All Entries
Lab/Group....:ALL Groups
Name Column..:Lab Sample ID

Total # Logs Found...: 1
Total # Results Found: 10

****

Log # Idx	Lab ID	Request Name Meth #	Log Type Lab Analyst	Analyte	Charge Num ARL	Log Approval Info Result
970916-9		WL-105:105	PLANT		522020602	970929 17:30 ROBERTA A JORDAN
1	7HR36	87012	7SRT	ACID	A..	<.0241 Normal Acid
2	7HR36	87017	7SRT	PH	A..	2.404E+00 +- 5.6E-02
3	7HR36	57171	7RAH	CHLORIDE	A..	< 4.11211E+00 ug/mL
4	7HR36	87092	7RAH	FLUORIDE	A..	5.07E-04 +- 8.1E-05 molar
5	7HR36	17920	7KFM	URANIUM	A..	< 3.46607E-01 ug/mL
6	7HR36	17920	7KFM	URANIUM	A..	< 3.46607E-01 ug/mL
7	7HR36	87100	7BCS	ALUMINUM	A..	< 6.72322E-04 MOLAR
8	7HR36	97168	7BCS	SULFATE	A..	< 4.06935E+00 ug/ml
9	7HR36	87970	7KFM	GROSS BETA	A..	2.05E+03 +- 1.9E+02 B/Min/ml
10	7HR36	87100	7BCS	ALUMINUM	A..	< 4.74571E-04 MOLAR

********** END **********

Log # Idx	Lab ID	Request Name / Meth #	Lab	Ana-lyst	Log Type / Analyte	ARL	Charge Num / Result	Log Approval Info
930513-29	WM-100						13120-200-001930601	04:14 SPLMGT SPLMGT
75	CANCELLED	1	1		LOG	C..	-- No sample received --	
930820-5	WM-100AT						13120-200-001940204	13:12 SPLMGT SPLMGT
30	1	7961	7RLC	RADIO CHEM		C..	Prep Completed 082193 07:33	
31	1	53993	3DAO	GAMMA SCAN		C..	** See Index 478 thru 481. **	
32	1	23381	3BJS	TOTAL SR		A..	5.95137+-.289466 UCI/ML	
33	1	2110	2JSL	SODIUM		A..	=0.023 Molarity	
34	1	2190	2JSL	POTASSIUM		A..	=0.0018 Molarity	
35	1	77168	7BKH	SULFATE		A..	6.05235E-03+-2.86055E-04 Molar	
36	1	77074	7SRT	NITRATE		A..	4.22397+-.646989 Molar	
37	1	57171	7BET	CHLORIDE		C..	< 155.44 UG/ML	
38	1	7972	7WDT	UDS		A..	* 3.68 MG/ML	
39	1	47981	7WDT	SP-GR		A..	1.21961+-7.80476E-04 @ 25/4	
40	1	67015	7BET	ACID		A..	< 8.97114E-02 NACID	
41	1	67093	7BGP	FLUORIDE		A..	2.20899E-02+-1.89826E-03 MOLAR	
42	1	7961	7RLC	SPEC CHEM		C..	Prep Completed 082193 07:33	
43	1	67920	7BET	URANIUM		A..	2.40951E-03+-6.96431E-04 G/L	
44	1	7100	7SDN	METALS-ICP		C..	See Individual Elements Below	
45	1	7101	7SDN	ALUMINUM		C..	> .190546 MOLAR	
46	1	7102	7SDN	BORON		A..	< 3.75619E-03 MOLAR	
47	1	7103	7	CADMIUM		C..	SEE472	
48	1	7105	7SDN	IRON		A..	1.81135E-02+-5.63841E-04 MOLAR	
49	1	7110	7SDN	ZIRCONIUM		A..	< 1.56506E-03 MOLAR	
50	1	7111	7SDN	CALCIUM		A..	2.67232E-03+-5.75093E-04 MOLAR	
330	2	57171	7BET	CHLORIDE		A..	25.2599+-4.24004 UG/ML	
465	1	7100	7SDN	METALS-ICP		C..	See Individual Elements Below	
466	1	7101	7SDN	ALUMINUM		A..	1.29549+-.361913 MOLAR	
471	1	7100	7SDN	METALS-ICP		C..	SEE 472	
472	1	7103	7SDN	CADMIUM		C..	< 9.50622E-04 MOLAR	
478	1	53993	3DAO	CO-60		A..	2060+-228 D/S/ML	
479	1	53993	3DAO	CS-134		A..	19400+-894 D/S/ML	
480	1	53993	3DAO	CS-137		A..	514000+-17500 D/S/ML	
481	1	53993	3DAO	EU-154		A..	3230+-383 D/S/ML	
485	1	7900	7WDT	EPA-TOX		C..	See Individual Elements Below	
486	1	7903	7WDT	CADMIUM		C..	> 130.628 mg/L	
493	1R	57171	7RLC	CHLORIDE		A..	30.9039+-7.96776 UG/ML	
494	PLASTIC1R	2110	2	SODIUM		C..	NOT REQUESTED	
495	PLASTIC1R	2190	2	POTASSIUM		C..	NOT REQUESTED	
496	PLASTIC1R	7961	7WDT	NA/K SPEC		C..	Prep Completed 090393 18:57	
497	1	7900	7WDT	EPA-TOX		C..	See Individual Elements Below	
498	1	7903	7WDT	CADMIUM		A..	100.222+-7.66378 mg/L	
930820-13	WM-100						13120-200-001940217	08:29 SPLMGT SPLMGT
375	1	47981	7MLE	SP-GR		A..	1.26416+-7.80474E-04 @ 25/4	
376	2	47981	7MLE	SP-GR		A..	1.24535+-7.80487E-04 @ 25/4	
377	3	47981	7MLE	SP-GR		A..	1.26386+-7.80474E-04 @ 25/4	

Log Idx	# Lab ID	Request Name	Log Type Meth #	L a b	Ana- lyst	Analyte	ARL	Result
378	2		67015		7BGP	ACID	A..	.120714+-3.74996E-02 NACID
379	3		67015		7BGP	ACID	A..	.121173+-3.75033E-02 NACID
380	2		67920		7BET	URANIUM	A..	1.07043E-02+-1.39365E-03 G/L
381	4		7972		7RLC	UDS	A..	* 2.18 MG/ML
382	2		57171		7BET	CHLORIDE	A..	156.221+-41.1815 UG/ML
383	3		77074		7SRT	NITRATE	A..	6.40565+-.636018 Molar
384	2		67093		7MLE	FLUORIDE	A..	2.22026E-02+-1.89713E-03 MOLAR
385	3		77168		7BKH	SULFATE	A..	1.01392E-03+-3.09891E-04 Molar
386	5		7961		7MLE	RADIOCHEM	C..	Prep Completed 082393 21:35
387	PLASTIC 1		7961		7MLE	SPECTCHEM	C..	Prep Completed 082393 14:45
388	PLASTIC 2		7961		7MLE	SPECTCHEM	C..	Prep Completed 082393 14:46
389	5		83993		3DAO	GAMMA SCAN	C..	** See Index 483 thru 484. **
390	5		23381		3BJS	TOTAL SR	A..	13.1827+-.434105 UCI/ML
391	5		3205		3IDG	TRANS-UA	A..	6002.79+-344.485 D/S/ML
392	5		23011		3JSJ	TRITIUM	A..	.297639+-4.64174E-02 D/SEC/ML
393	PLASTIC 1		7900		7CBG	EPA-TOX	C..	See Individual Elements Below
394	PLASTIC 1		7901		7CBG	ARSENIC	A..	< 3.54948 mg/L
395	PLASTIC 1		7902		7CBG	BARIUM	A..	< 4.57491 mg/L
396	PLASTIC 1		7903		7CBG	CADMIUM	A..	62.9984+-3.09222 mg/L
397	PLASTIC 1		7904		7CBG	CHROMIUM	A..	32.517+-2.81098 mg/L
398	PLASTIC 1		7905		7CBG	LEAD	A..	40.7849+-3.38658 mg/L
399	PLASTIC 1		7906		7CBG	SELENIUM	C..	< 3.12083 mg/L
400	PLASTIC 1		7907		7CBG	SILVER	C..	< 4.04898 mg/L
401	PLASTIC 1		7908		7CBG	NICKEL	A..	12.5588+-1.0438 mg/L
402	PLASTIC 2		7900		7CBG	EPA-TOX	C..	See Individual Elements Below
403	PLASTIC 2		7901		7CBG	ARSENIC	A..	< 3.54948 mg/L
404	PLASTIC 2		7902		7CBG	BARIUM	A..	< 4.57491 mg/L
405	PLASTIC 2		7903		7CBG	CADMIUM	A..	61.2782+-3.04655 mg/L
406	PLASTIC 2		7904		7CBG	CHROMIUM	A..	33.6403+-2.86527 mg/L
407	PLASTIC 2		7905		7CBG	LEAD	A..	44.3699+-3.53409 mg/L
408	PLASTIC 2		7906		7CBG	SELENIUM	C..	< 3.12083 mg/L
409	PLASTIC 2		7907		7CBG	SILVER	C..	< 4.04898 mg/L
410	PLASTIC 2		7908		7CBG	NICKEL	A..	13.9321+-1.11811 mg/L
411	PLASTIC 1		2809		2LBZ	MERCURY	A..	=1.7E+02 mg/l
412	PLASTIC 2		2809		2LBZ	MERCURY	A..	=1.6E+02 mg/l
413	PLASTIC 1		2330	2		ARSENIC.	C..	SEE RAL DATA
414	PLASTIC 2		2330	2		ARSENIC.	C..	SEE RAL DATA
415	PLASTIC 1		2340	2		SELENIUM.	C..	SEE RAL DATA
416	PLASTIC 2		2340	2		SELENIUM.	C..	SEE RAL DATA
417	PLASTIC 1		2110		2JSL	SODIUM	A..	=0.17 Molarity
418	PLASTIC 1		2190		2JSL	POTASSIUM	A..	=0.021 Molarity
419	5		67016		7KFM	PH	A..	< .5 pH
420	RAMP WM100		7985		7CWL	FLASHPOINT	A..	NO Flash @ 60.0 deg C corrected
421	PLASTIC 1		7961		7MLE	SPECTCHEM	C..	Prep Completed 082393 14:46
422	VOA VIAL 1		9305		9HCJ	GCMS-2SRC	A..	SEE ATTACHED
423	VOA VIAL 2		9305		9HCJ	GCMS-2SRC	A..	SEE ATTACHED
424	PLASTIC 1		7100		7SDN	METALS-ICP	C..	See Individual Elements Below
425	PLASTIC 1		7101		7SDN	ALUMINUM	C..	> .190546 MOLAR
426	PLASTIC 1		7102		7SDN	BORON	A..	< 3.75619E-03 MOLAR

Log Idx	# Lab ID	Request Name	Meth #	Lab	Log Type Ana-lyst	Analyte	ARL	Charge Num / Log Approval Info / Result
427	PLASTIC 1		7103	7		CADMIUM	C..	SEE467
428	PLASTIC 1		7105	7	SDN	IRON	A..	.02076+-6.04381E-04 MOLAR
429	PLASTIC 1		7110	7	SDN	ZIRCONIUM	A..	< 1.56506E-03 MOLAR
430	PLASTIC 1		7111	7	SDN	CALCIUM	A..	1.16336E-02+-9.42946E-04 MOLAR
431	4		47981	7	MLE	SP-GR	A..	1.2311+-7.80485E-04 @ 25/4
432	6		67016	7	KFM	PH	A..	< .5 pH
452	5		7900	7	SDN	EPA-TOX	C..	See Individual Elements Below
453	5		7901	7	SDN	ARSENIC	C..	< 5.59712 mg/L
454	5		7906	7	SDN	SELENIUM	C..	< 2.53942 mg/L
455	5		7907	7	SDN	SILVER	A..	< 2.45596 mg/L
456	6		7900	7	SDN	EPA-TOX	C..	See Individual Elements Below
457	6		7901	7	SDN	ARSENIC	C..	< 5.59712 mg/L
458	6		7906	7	SDN	SELENIUM	C..	< 2.53942 mg/L
459	6		7907	7	SDN	SILVER	A..	< 2.45596 mg/L
463	PLASTIC 1		7100	7	SDN	METALS-ICP	C..	See Individual Elements Below
464	PLASTIC 1		7101	7	SDN	ALUMINUM	A..	1.08878+-.362405 MOLAR
467	PLASTIC 1		7100	7	SDN	METALS-ICP	C..	See Individual Elements Below
468	PLASTIC 1		7103	7	SDN	CADMIUM	A..	< 9.50622E-04 MOLAR
483	5		83993	3	DAO	CS-134	A..	20600+-1120 D/S/ML
484	5		83993	3	DAO	CS-137	A..	838000+-31900 D/S/ML
487	PLASTIC1R		7100	7	WDT	METALS-ICP	C..	See Individual Elements Below
488	PLASTIC1R		7111	7	WDT	CALCIUM	A..	1.18246E-02+-9.5268E-04 MOLAR
489	3R		77074	7	MLE	NITRATE	A..	5.78416+-.618707 Molar
490	BEG KNOWN		7985	7	CWL	FLASHPOINT	C..	Flashed @ 52.0 deg C corrected
491	END KNOWN		7985	7	CWL	FLASHPOINT	C..	Flashed @ 52.0 deg C corrected
492	60C WM100		7985	7	CWL	FLASHPOINT	A..	NO Flash @ 60.0 deg C corrected
499	PLASTIC 1		7961	7	KFM	SP CHEM	C..	Prep Completed 090893 23:20
500	PLASTIC 1		7961	7	KFM	SP CHEM	C..	Prep Completed 090893 23:21
501	PLASTIC 2		7961	7	KFM	SP CHEM	C..	Prep Completed 090893 23:21
504	PLASTIC 1R		7900	7	SDN	EPA-TOX	C..	See Individual Elements Below
505	PLASTIC 1R		7901	7	SDN	ARSENIC	A..	< 3.89309 mg/L
506	PLASTIC 2R		7900	7	SDN	EPA-TOX	C..	See Individual Elements Below
507	PLASTIC 2R		7901	7	SDN	ARSENIC	A..	< 3.89309 mg/L
508	PLASTIC 1R		7900	7	SDN	EPA-TOX	C..	See Individual Elements Below
509	PLASTIC 1R		7906	7	SDN	SELENIUM	A..	< .991639 mg/L
510	PLASTIC 2R		7900	7	SDN	EPA-TOX	C..	See Individual Elements Below
511	PLASTIC 2R		7906	7	SDN	SELENIUM	A..	< .991639 mg/L
930820-16		WM-100						13120-200-001940210 23:33 SPLMGT SPLMGT
331	1		47981	7	RLC	SP-GR	A..	.999071+-7.79144E-04 @ 25/4
332	3		47981	7	RLC	SP-GR	A..	.999458+-7.79146E-04 @ 25/4
333	2		67015	7	BGP	ACID	A..	< 8.83383E-02 NACID
334	3		67015	7	BGP	ACID	A..	< 8.97114E-02 NACID
335	2		87920	7	RLC	URANIUM	A..	< 4.22281E-04 G/L
336	4		7972	7	RLC	UDS	A..	NO VISIBLE SOLIDS
337	2		57171	7	BET	CHLORIDE	A..	< 15.0301 UG/ML
338	3		77074	7	SRT	NITRATE	A..	< 1.61E-05 Molar
339	2		67093	7	BGP	FLUORIDE	C..	< 1.35096E-03 MOLAR
340	3		77168	7	MLE	SULFATE	A..	< 1.04102E-06 Molar

Log Idx	# Lab ID	Request Name	Meth #	Lab	Log Type Ana-lyst	Analyte	Charge Num ARL	Log Approval Info Result
341	5		7961	7RLC	RADIO CHEM	C..		Prep Completed 082193 04:48
342	PLASTIC 1		7961	7RLC	RADIO CHEM	C..		Prep Completed 082193 04:48
343	PLASTIC 2		7961	7RLC	SPEC CHEM	C..		Prep Completed 082193 04:49
344	5		53993	3DAO	GAMMA SCAN	C..		** See Index 482. **
345	5		23381	3BJS	TOTAL SR	A..		3.12763E-05+-6.78419E-06 UCI/M
346	5		3205	3IDG	TRANS-UA	A..		< .137597 D/S/ML
347	5		23011	3JSJ	TRITIUM	A..		< .157442 D/SEC/ML
348	PLASTIC 1		7900	7CBG	EPA-TOX	C..		See Individual Elements Below
349	PLASTIC 1		7901	7CBG	ARSENIC	A..		< .67931 mg/L
350	PLASTIC 1		7902	7CBG	BARIUM	A..		< .875559 mg/L
351	PLASTIC 1		7903	7CBG	CADMIUM	A..		< .863441 mg/L
352	PLASTIC 1		7904	7CBG	CHROMIUM	A..		< .830681 mg/L
353	PLASTIC 1		7905	7CBG	LEAD	A..		< .573449 mg/L
354	PLASTIC 1		7906	7CBG	SELENIUM	A..		< .597274 mg/L
355	PLASTIC 1		7907	7CBG	SILVER	A..		< .774906 mg/L
356	PLASTIC 1		7908	7CBG	NICKEL	A..		< .806555 mg/L
357	PLASTIC 2		2809	2LBZ	MERCURY	A..		=Not Detected:DL= 0.0045 mg/l
358	PLASTIC 2		2330	2	ARSENIC.	C..		SEE METHOD 7901
359	PLASTIC 1		2340	2	SELENIUM.	C..		SEE METHOD 7906
360	PLASTIC 1		2110	2JSL	SODIUM	A..		=7.0E-06 Molarity
361	PLASTIC 1		2190	2JSL	POTASSIUM	A..		=1.8E-06 Molarity
362	5		67016	7KFM	PH	A..		9.56302+-.035681 pH
363	KNOWN		7985	7SDN	FLASHPOINT	C..		Flashed @ 41.0 deg C corrected
364	PLASTIC 1		7961	7RLC	SPEC CHEM	C..		Prep Completed 082193 04:49
365	VOA VIAL 1		9305	9HCJ	GCMS-2SRC	A..		SEE ATTACHED
366	VOA VIAL 2		9305	9HCJ	GCMS-2SRC	C..		NOT REQUIRED
367	PLASTIC 1		7100	7SDN	METALS-ICP	C..		See Individual Elements Below
368	PLASTIC 1		7101	7SDN	ALUMINUM	A..		< 6.56896E-03 MOLAR
369	PLASTIC 1		7102	7SDN	BORON	A..		3.96261E-03+-1.52717E-03 MOLAR
370	PLASTIC 1		7103	7	CADMIUM	C..		SEE 469
371	PLASTIC 1		7105	7SDN	IRON	A..		< 2.211E-04 MOLAR
372	PLASTIC 1		7110	7SDN	ZIRCONIUM	A..		< 1.56506E-03 MOLAR
373	PLASTIC 1		7111	7SDN	CALCIUM	A..		< 2.54008E-03 MOLAR
374	2		47981	7RLC	SP-GR	A..		.999714+-7.79147E-04 @ 25/4
434	5		67016	7KFM	PH	A..		9.08224+-3.55412E-02 pH
435	6		67016	7KFM	PH	A..		8.50498+-3.54009E-02 pH
469	PLASTIC 1		7100	7SDN	METALS-ICP	C..		See Individual Elements Below
470	PLASTIC 1		7103	7SDN	CADMIUM	A..		< 9.50622E-04 MOLAR
482	5		53993	3DAO	CS-137	A..		58.4+-3.39 D/S/ML
502	6		7985	7SDN	FLASHPOINT	A..		NO Flash @ 60.0 deg C corrected

930821-6 WM-100 13120-200-001940302 15:36 SPLMGT SPLMGT

24	1		47981	7MLE	SP-GR	A..		1.22632+-7.80482E-04 @ 25/4
25	2		47981	7MLE	SP-GR	A..		1.2212+-7.80478E-04 @ 25/4
26	3		47981	7MLE	SP-GR	A..		1.22013+-7.80477E-04 @ 25/4
27	2		67015	7BET	ACID	A..		< 8.97114E-02 NACID
28	3		67015	7BET	ACID	A..		< 8.97114E-02 NACID
29	2		67920	7BET	URANIUM	A..		3.66657E-03+-8.39782E-04 G/L

Log Idx	# Lab ID	Request Name	Log Type Meth #	Lab	Analyst	Analyte	Charge Num ARL	Log Approval Info Result
30	4		7972	7	RLC	UDS	A..	* 5.07 MG/ML
31	2		57171	7	BET	CHLORIDE	C..	< 120.968 UG/ML
32	3		77074	7	SRT	NITRATE	A..	3.2689+-.65288 Molar
33	2		67093	7	MLE	FLUORIDE	A..	6.7234E-03+-2.09296E-03 MOLAR
34	3		77168	7	BKH	SULFATE	A..	1.31621E-03+-1.8172E-04 Molar
35	5		7961	7	WDT	RADIOCHEM	C..	Prep Completed 082393 11:31
36	PLASTIC 1		7961	7	MLE	SPECTCHEM	C..	Prep Completed 082393 14:50
37	PLASTIC 2		7961	7	MLE	SPECTCHEM	C..	Prep Completed 082393 14:50
38	5		73993	3	DAO	GAMMA SCAN	C..	** See Index 279 thru 281. **
39	5		23381	3	BJS	TOTAL SR	A..	3.66712+-.227142 UCI/ML
40	5		3205	3	IDG	TRANS-UA	A..	5440.28+-337.004 D/S/ML
41	5		23011	3	JSJ	TRITIUM	A..	< 157.599 D/SEC/ML
42	PLASTIC 1		7900	7	CBG	EPA-TOX	C..	See Individual Elements Below
43	PLASTIC 1		7901	7	CBG	ARSENIC	A..	< 3.54948 mg/L
44	PLASTIC 1		7902	7	CBG	BARIUM	A..	< 4.57491 mg/L
45	PLASTIC 1		7903	7	CBG	CADMIUM	A..	22.7578+-1.74276 mg/L
46	PLASTIC 1		7904	7	CBG	CHROMIUM	A..	8.02915+-1.10001 mg/L
47	PLASTIC 1		7905	7	CBG	LEAD	A..	12.4807+-1.86114 mg/L
48	PLASTIC 1		7906	7	CBG	SELENIUM	C..	< 3.12083 mg/L
49	PLASTIC 1		7907	7	CBG	SILVER	C..	< 4.04898 mg/L
50	PLASTIC 1		7908	7	CBG	NICKEL	A..	4.84096+-.433302 mg/L
51	PLASTIC 2		7900	7	CBG	EPA-TOX	C..	See Individual Elements Below
52	PLASTIC 2		7901	7	CBG	ARSENIC	A..	< 3.54948 mg/L
53	PLASTIC 2		7902	7	CBG	BARIUM	A..	< 4.57491 mg/L
54	PLASTIC 2		7903	7	CBG	CADMIUM	A..	21.9886+-1.70681 mg/L
55	PLASTIC 2		7904	7	CBG	CHROMIUM	A..	8.02166+-1.09908 mg/L
56	PLASTIC 2		7905	7	CBG	LEAD	A..	9.43227+-1.61476 mg/L
57	PLASTIC 2		7906	7	CBG	SELENIUM	C..	< 3.12083 mg/L
58	PLASTIC 2		7907	7	CBG	SILVER	C..	< 4.04898 mg/L
59	PLASTIC 2		7908	7	CBG	NICKEL	A..	< 4.21435 mg/L
60	PLASTIC 1		2809	2	LBZ	MERCURY	A..	=65 mg/l
61	PLASTIC 2		2809	2	LBZ	MERCURY	A..	=61 mg/l
62	PLASTIC 1		2330	2		ARSENIC.	C..	SEE RAL DATA
63	PLASTIC 2		2330	2		ARSENIC.	C..	SEE RAL DATA
64	PLASTIC 1		2340	2		SELENIUM.	C..	SEE RAL DATA
65	PLASTIC 2		2340	2		SELENIUM.	C..	SEE RAL DATA
66	PLASTIC 1		2110	2	JSL	SODIUM	A..	=0.049 Molarity
67	PLASTIC 1		2190	2	JSL	POTASSIUM	A..	=0.0046 Molarity
68	5		67016	7	KFM	PH	A..	1.67766+-3.60744E-02 pH
69	RAMP WM100		7985	7	CWL	FLASHPOINT	A..	NO Flash @ 60.0 deg C corrected
70	PLASTIC 1		7961	7	MLE	SPECTCHEM	C..	Prep Completed 082393 14:50
71	VOA VIAL 1		9305	9	HCJ	GCMS-2SRC	A..	SEE ATTACHED
72	VOA VIAL 2		9305	9	HCJ	GCMS-2SRC	C..	SAMPLES BATCHED SINGLE ANALYSIS
73	PLASTIC 1		7100	7	SDN	METALS-ICP	C..	See Individual Elements Below
74	PLASTIC 1		7101	7	SDN	ALUMINUM	C..	> .190546 MOLAR
75	PLASTIC 1		7102	7	SDN	BORON	A..	< 3.75619E-03 MOLAR
76	PLASTIC 1		7103	7		CADMIUM	C..	SEE 273
77	PLASTIC 1		7105	7	SDN	IRON	A..	2.02119E-02+-5.96183E-04 MOLAR
78	PLASTIC 1		7110	7	SDN	ZIRCONIUM	A..	< 1.56506E-03 MOLAR

Log Id	# Lab ID	Request Name	Meth #	Log Type Lab	Ana-lyst	Analyte	ARL	Charge Num / Log Approval Info / Result
79	PLASTIC 1		7111	7SDN	CALCIUM		A..	3.42787E-03+-6.14036E-04 MOLAR
80	4		47981	7MLE	SP-GR		A..	1.177+-7.80374E-04 @ 25/4
138	3		57171	7BET	CHLORIDE		A..	53.9264+-8.5855 UG/ML
244	6		67016	7KFM	PH		A..	1.69967+-3.60655E-02 pH
249	PLASTIC 2		7961	7MLE	SPECTCHEM		C..	Prep Completed 082393 14:51
251	60C WM100		7985	7CWL	FLASHPOINT		A..	NO Flash @ 60.0 deg C corrected
252	END KNOWN		7985	7CWL	FLASHPOINT		A..	Flashed @ 60.0 deg C corrected
256	5		7900	7SDN	EPA-TOX		C..	See Individual Elements Below
257	5		7901	7SDN	ARSENIC		C..	< 5.59712 mg/L
258	5		7906	7SDN	SELENIUM		C..	< 2.53942 mg/L
259	5		7907	7SDN	SILVER		A..	< 2.45596 mg/L
260	5		7908	7SDN	NICKEL		A..	5.05519+-.488375 mg/L
261	6		7900	7SDN	EPA-TOX		C..	See Individual Elements Below
262	6		7901	7SDN	ARSENIC		C..	< 5.59712 mg/L
263	6		7906	7SDN	SELENIUM		C..	< 2.53942 mg/L
264	6		7907	7SDN	SILVER		A..	< 2.45596 mg/L
265	6		7908	7SDN	NICKEL		A..	6.17468+-.591991 mg/L
271	PLASTIC 1		7100	7SDN	METALS-ICP		C..	See Individual Elements Below
272	PLASTIC 1		7101	7SDN	ALUMINUM		A..	1.04358+-.362522 MOLAR
273	PLASTIC 1		7100	7SDN	METALS-ICP		C..	See Individual Elements Below
274	PLASTIC 1		7103	7SDN	CADMIUM		A..	< 9.50622E-04 MOLAR
279	5		73993	3DAO	SB-125		A..	4750+-1310 D/S/ML
280	5		73993	3DAO	CS-134		A..	13300+-793 D/S/ML
281	5		73993	3DAO	CS-137		A..	415000+-16100 D/S/ML
283	PLASTIC 1		7961	7KFM	SP CHEM		C..	Prep Completed 090993 20:49
284	PLASTIC 2		7961	7KFM	SP CHEM		C..	Prep Completed 090993 20:49
293	PLASTIC 1R		7900	7SDN	EPA-TOX		C..	See Individual Elements Below
294	PLASTIC 1R		7901	7SDN	ARSENIC		A..	< 3.89309 mg/L
295	PLASTIC 2R		7900	7SDN	EPA-TOX		C..	See Individual Elements Below
296	PLASTIC 2R		7901	7SDN	ARSENIC		A..	< 3.89309 mg/L
297	PLASTIC 1R		7900	7SDN	EPA-TOX		C..	See Individual Elements Below
298	PLASTIC 1R		7906	7SDN	SELENIUM		A..	< .991639 mg/L
299	PLASTIC 2R		7900	7SDN	EPA-TOX		C..	See Individual Elements Below
300	PLASTIC 2R		7906	7SDN	SELENIUM		A..	< .991639 mg/L
930821-7		WM-100						13120-200-001940210 23:16 SPLMGT SPLMGT
81	1		47981	7MLE	SP-GR		A..	1.20464+-7.80453E-04 @ 25/4
82	2		47981	7MLE	SP-GR		A..	1.20465+-7.80453E-04 @ 25/4
83	3		47981	7MLE	SP-GR		A..	1.20457+-7.80453E-04 @ 25/4
84	2		67015	7BET	ACID		A..	< 8.97114E-02 NACID
85	3		67015	7BET	ACID		A..	< 8.97114E-02 NACID
86	2		67920	7BET	URANIUM		A..	< 1.16045E-03 G/L
87	4		7972	7AWO	UDS		A..	NO VISIBLE SOLIDS
88	2		57171	7BET	CHLORIDE		A..	< 15.0301 UG/ML
89	3		77074	7SRT	NITRATE		A..	< 1.61E-05 Molar
90	2		67093	7MLE	FLUORIDE		A..	< 1.33105E-03 MOLAR
91	3		77168	7MLE	SULFATE		A..	< 1.45209E-06 Molar
92	5		7961	7WDT	RADIOCHEM		C..	Prep Completed 082393 11:24
93	PLASTIC 1		7961	7WDT	SPEC-CHEM		C..	Prep Completed 082393 11:25

Log Idx	# Lab ID	Request Name	Log Type Meth #	L ab	Ana- lyst	Analyte	ARL	Result
94	PLASTIC 2		7961	7		SPEC PREP	C..	NOT REQUESTED
95	5		73993	3	DAO	GAMMA SCAN	C..	** See Index 282. **
96	5		23381	3	BJS	TOTAL SR	A..	<< 5.01646E-06+-3.56361E-06 UCI/M
97	5		3205	3	IDG	TRANS-UA	A..	< .137597 D/S/ML
98	5		23011	3	JSJ	TRITIUM	A..	< 5.6679 D/SEC/ML
99	PLASTIC 1		7900	7	CBG	EPA-TOX	C..	See Individual Elements Below
100	PLASTIC 1		7901	7	CBG	ARSENIC	A..	< .67931 mg/L
101	PLASTIC 1		7902	7	CBG	BARIUM	A..	< .875559 mg/L
102	PLASTIC 1		7903	7	CBG	CADMIUM	A..	< .863441 mg/L
103	PLASTIC 1		7904	7	CBG	CHROMIUM	A..	< .830681 mg/L
104	PLASTIC 1		7905	7	CBG	LEAD	A..	< .573449 mg/L
105	PLASTIC 1		7906	7	CBG	SELENIUM	A..	< .597274 mg/L
106	PLASTIC 1		7907	7	CBG	SILVER	A..	< .774906 mg/L
107	PLASTIC 1		7908	7	CBG	NICKEL	A..	< .806555 mg/L
108	PLASTIC 2		7900	7		EPA-TOX	C..	NOT REQUESTED
109	PLASTIC 2		7901	7		ARSENIC	C..	NOT REQUESTED
110	PLASTIC 2		7902	7		BARIUM	C..	NOT REQUESTED
111	PLASTIC 2		7903	7		CADMIUM	C..	NOT REQUESTED
112	PLASTIC 2		7904	7		CHROMIUM	C..	NOT REQUESTED
113	PLASTIC 2		7905	7		LEAD	C..	NOT REQUESTED
114	PLASTIC 2		7906	7		SELENIUM	C..	NOT REQUESTED
115	PLASTIC 2		7907	7		SILVER	C..	NOT REQUESTED
116	PLASTIC 2		7908	7		NICKEL	C..	NOT REQUESTED
117	PLASTIC 1		2809	2	LBZ	MERCURY	A..	=Not Detected:DL= 0.0045 mg/l
118	PLASTIC 2		2809	2		MERCURY	C..	NOT REQUESTED
119	PLASTIC 1		2330	2		ARSENIC.	C..	SEE METHOD 7901
120	PLASTIC 2		2330	2		ARSENIC.	C..	NOT REQUESTED
121	PLASTIC 1		2340	2		SELENIUM.	C..	SEE METHOD 7906
122	PLASTIC 2		2340	2		SELENIUM.	C..	NOT REQUESTED
123	PLASTIC 1		2110	2	JSL	SODIUM	A..	=7.3E-05 Molarity
124	PLASTIC 1		2190	2	JSL	POTASSIUM	A..	=4.5E-06 Molarity
125	5		67016	7	KFM	PH	A..	7.41985+-3.52197E-02 pH
126	6		7985	7	SDN	FLASHPOINT	A..	NO Flash @ 60.0 deg C corrected
127	PLASTIC 1		7961	7	WDT	SPEC-CHEM	C..	Prep Completed 082393 11:26
128	VOA VIAL 1		9305	9	HCJ	GCMS-2SRC	C..	SEE LOG 082016 INDEX 365
129	VOA VIAL 2		9305	9	HCJ	GCMS-2SRC	C..	SEE LOG 082016 INDEX 365
130	PLASTIC 1		7100	7	SDN	METALS-ICP	C..	See Individual Elements Below
131	PLASTIC 1		7101	7	SDN	ALUMINUM	A..	< 6.56896E-03 MOLAR
132	PLASTIC 1		7102	7	SDN	BORON	A..	< 3.75619E-03 MOLAR
133	PLASTIC 1		7103	7		CADMIUM	C..	NOT REQUESTED
134	PLASTIC 1		7105	7	SDN	IRON	C..	< 2.211E-04 MOLAR
135	PLASTIC 1		7110	7	SDN	ZIRCONIUM	A..	< 1.56506E-03 MOLAR
136	PLASTIC 1		7111	7	SDN	CALCIUM	A..	< 2.54008E-03 MOLAR
137	4		47981	7	MLE	SP-GR	A..	1.20458+-7.80453E-04 @ 25/4
250	2		7961	7	WDT	SPEC-CHEM	C..	Prep Completed 082393 11:26
282	5		73993	3	DAO	CS-137	A..	14.4+-1.85 D/S/ML
292	KNOWN		7985	7	SDN	FLASHPOINT	C..	Flashed @ 41.0 deg C corrected

Log # Index	Lab ID	Request Name	Meth #	Lab	Analyst	Analyte	ARL	Log Type / Charge Num / Log Approval Info / Result
930822-3		WM-100						13120-200-001940302 15:22 SPLMGT SPLMGT
25	1		47981		7MLE	SP-GR	C..	1.44039+-7.80554E-04 @ 25/4
26	2		47981		7MLE	SP-GR	C..	1.44165+-7.80566E-04 @ 25/4
27	3		47981		7MLE	SP-GR	C..	1.43988+-7.8055E-04 @ 25/4
28	2		67015		7MLE	ACID	A..	.116755+-.037468 NACID
29	3		67015		7MLE	ACID	A..	.107615+-3.73951E-02 NACID
30	2		67920		7BET	URANIUM	A..	9.49411E-03+-1.31493E-03 G/L
31	4		7972		7RLC	UDS	C..	* 1.25 MG/ML
32	2		57171		7MLE	CHLORIDE	A..	198.82+-42.284 UG/ML
33	3		77074		7SRT	NITRATE	A..	8.23833+-.608549 Molar
34	2		67093		7MLE	FLUORIDE	A..	1.96431E-02+-1.9204E-03 MOLAR
35	3		77168		7BKH	SULFATE	A..	9.30332E-04+-1.71107E-04 Molar
36	5		7961		7WDT	RADIOCHEM	C..	Prep Completed 082393 11:30
37	PLASTIC 1		7961		7MLE	SPECTCHEM	C..	Prep Completed 082393 14:52
38	PLASTIC 2		7961		7MLE	SPECTCHEM	C..	Prep Completed 082393 14:52
39	5		63993		3DAO	GAMMA SCAN	C..	** See Index 191 thru 192. **
40	5		23381		3BJS	TOTAL SR	A..	13.9196+-.62628 UCI/ML
41	5		3205		3IDG	TRANS-UA	A..	5445.2+-337.045 D/S/ML
42	5		23011		3JSJ	TRITIUM	A..	< 157.599 D/SEC/ML
43	PLASTIC 1		7900		7CBG	EPA-TOX	C..	See Individual Elements Below
44	PLASTIC 1		7901		7CBG	ARSENIC	A..	< 3.54948 mg/L
45	PLASTIC 1		7902		7CBG	BARIUM	A..	< 4.57491 mg/L
46	PLASTIC 1		7903		7CBG	CADMIUM	A..	42.233+-2.48715 mg/L
47	PLASTIC 1		7904		7CBG	CHROMIUM	A..	38.2583+-3.07863 mg/L
48	PLASTIC 1		7905		7CBG	LEAD	A..	50.6498+-3.77913 mg/L
49	PLASTIC 1		7906		7CBG	SELENIUM	C..	< 3.12083 mg/L
50	PLASTIC 1		7907		7CBG	SILVER	C..	< 4.04898 mg/L
51	PLASTIC 1		7908		7CBG	NICKEL	A..	15.3493+-1.18997 mg/L
52	PLASTIC 2		7900		7CBG	EPA-TOX	C..	See Individual Elements Below
53	PLASTIC 2		7901		7CBG	ARSENIC	C..	6.78351+-1.44378 mg/L
54	PLASTIC 2		7902		7CBG	BARIUM	A..	< 4.57491 mg/L
55	PLASTIC 2		7903		7CBG	CADMIUM	A..	42.0856+-2.48234 mg/L
56	PLASTIC 2		7904		7CBG	CHROMIUM	A..	37.2348+-3.03262 mg/L
57	PLASTIC 2		7905		7CBG	LEAD	A..	51.2431+-3.8015 mg/L
58	PLASTIC 2		7906		7CBG	SELENIUM	C..	< 3.12083 mg/L
59	PLASTIC 2		7907		7CBG	SILVER	C..	< 4.04898 mg/L
60	PLASTIC 2		7908		7CBG	NICKEL	A..	14.1833+-1.13118 mg/L
61	PLASTIC 1		2809		2LBZ	MERCURY	A..	=1.4E+02 mg/l
62	PLASTIC 2		2809		2LBZ	MERCURY	A..	=1.4E+02 mg/l
63	PLASTIC 1		2339	2		ARSENIC.	C..	SEE RAL DATA
64	PLASTIC 2		2339	2		ARSENIC.	C..	SEE RAL DATA
65	PLASTIC 1		2349	2		SELENIUM.	C..	SEE RAL DATA
66	PLASTIC 2		2349	2		SELENIUM.	C..	SEE RAL DATA
67	PLASTIC 1		2110		2JSL	SODIUM	A..	=0.17 Molarity
68	PLASTIC 1		2190		2JSL	POTASSIUM	A..	=0.021 Molarity
69	5		67016		7KFM	PH	A..	< .5 pH
70	6		67016		7KFM	PH	A..	< .5 pH
71	PLASTIC 1		7961		7MLE	SPECTCHEM	C..	Prep Completed 082393 14:53
72	VOA VIAL 1		9305		9HCJ	GCMS-2SRC	A..	SEE ATTACHED

Log Idx	# Lab ID	Request Name	Meth #	Log Type Lab	Ana-lyst	Analyte	ARL	Charge Num Log Approval Info Result
73	VOA VIAL 2		9305	9HCJ	GCMS-2SRC		C..	SAMPLES BATCHED SINGLE ANALYSIS
74	PLASTIC 1		7100	7RAH	METALS-ICP		C..	See Individual Elements Below
75	PLASTIC 1		7101	7RAH	ALUMINUM		C..	< 6.60854E-03 MOLAR
76	PLASTIC 1		7102	7RAH	BORON		C..	< 3.77882E-03 MOLAR
77	PLASTIC 1		7103	7	CADMIUM		C..	NOT REQUESTED
78	PLASTIC 1		7105	7RAH	IRON		C..	< 2.22432E-04 MOLAR
79	PLASTIC 1		7110	7RAH	ZIRCONIUM		C..	< 1.57449E-03 MOLAR
80	PLASTIC 1		7111	7RAH	CALCIUM		C..	< 2.55539E-03 MOLAR
81	4		47981	7MLE	SP-GR		C..	1.44216+-7.8057E-04 @ 25/4
163	PLASTIC 2		7961	7MLE	SPECTCHEM		C..	Prep Completed 082393 14:53
164	BEG KNOWN		7985	7CWL	FLASHPOINT		A..	Flashed @ 53.0 deg C corrected
165	RAMP 100		7985	7CWL	FLASHPOINT		A..	NO Flash @ 60.0 deg C corrected
166	60C 100		7985	7CWL	FLASHPOINT		A..	NO Flash @ 60.0 deg C corrected
175	PLASTIC 2		7100	7GDD	METALS-ICP		C..	See Individual Elements Below
176	PLASTIC 2		7101	7GDD	ALUMINUM		A..	1.41894+-3.90244E-02 MOLAR
179	20		47981	7GDD	SP-GR		A..	1.22883+-7.80484E-04 @ 25/4
180	6		47981	7GDD	SP-GR		A..	1.22682+-7.80483E-04 @ 25/4
181	11		47981	7GDD	SP-GR		A..	1.24472+-7.80487E-04 @ 25/4
182	15		47981	7GDD	SP-GR		A..	1.24662+-7.80486E-04 @ 25/4
183	PLASTIC1R		7100	7WDT	METALS-ICP		C..	See Individual Elements Below
184	PLASTIC1R		7105	7WDT	IRON		A..	5.12682E-03+-3.06266E-04 MOLAR
185	3R		77074	7MLE	NITRATE		A..	6.20227+-.484159 Molar
186	#11		7900	7VJJ	EPA-TOX		C..	See Individual Elements Below
187	#11		7907	7VJJ	SILVER		A..	< 2.10773 mg/L
188	#20		7900	7VJJ	EPA-TOX		C..	See Individual Elements Below
189	#20		7907	7VJJ	SILVER		A..	< 2.10773 mg/L
190	3R		77168	7MLE	SULFATE		A..	2.84473E-03+-2.36248E-04 Molar
191	5		63993	3DAO	CS-134		A..	12600+-714 D/S/ML
192	5		63993	3DAO	CS-137		A..	677000+-21000 D/S/ML
198	PLASTIC 1		7961	7MLE	AS/SE		C..	Prep Completed 090993 04:05
199	PLASTIC 2		7961	7MLE	AS/SE		C..	Prep Completed 090993 04:06
207	PLASTIC 1R		7900	7SDN	EPA-TOX		C..	See Individual Elements Below
208	PLASTIC 1R		7901	7SDN	ARSENIC		A..	< 3.89309 mg/L
209	PLASTIC 2R		7900	7SDN	EPA-TOX		C..	See Individual Elements Below
210	PLASTIC 2R		7901	7SDN	ARSENIC		A..	< 3.89309 mg/L
211	PLASTIC 1R		7900	7SDN	EPA-TOX		C..	See Individual Elements Below
212	PLASTIC 1R		7906	7SDN	SELENIUM		A..	< .991639 mg/L
213	PLASTIC 2R		7900	7SDN	EPA-TOX		C..	See Individual Elements Below
214	PLASTIC 2R		7906	7SDN	SELENIUM		A..	< .991639 mg/L
215	PLASTIC 1R		7900	7SDN	EPA-TOX		C..	See Individual Elements Below
216	PLASTIC 1R		7906	7SDN	SELENIUM		C..	< .991639 mg/L
217	1R		7100	7CBG	METALS-ICP		C..	See Individual Elements Below
218	1R		7101	7CBG	ALUMINUM		C..	> .956797 MOLAR
219	1R		7102	7CBG	BORON		C..	< 4.07588E-02 MOLAR
220	1R		7105	7CBG	IRON		C..	2.37342E-02+-1.54434E-03 MOLAR
221	1R		7110	7CBG	ZIRCONIUM		C..	< 8.16728E-03 MOLAR
222	1R		7111	7CBG	CALCIUM		C..	< 1.27546E-02 MOLAR
223	1R		7100	7CBG	METALS-ICP		C..	See Individual Elements Below
224	1R		7101	7CBG	ALUMINUM		C..	> .039455 MOLAR

Log Id x	# Lab ID	Request Name	Meth #	Log Type Lab	Ana-lyst	Analyte	ARL	Result	Charge Num Log Approval Info
225	1R		7102	7CBG		BORON	C..	2.96137E-03+-6.48457E-04 MOLAR	
226	1R		7105	7CBG		IRON	C..	> .018911 MOLAR	
227	1R		7110	7CBG		ZIRCONIUM	C..	1.01406E-03+-1.42822E-04 MOLAR	
228	1R		7111	7CBG		CALCIUM	C..	9.79575E-03+-2.68263E-04 MOLAR	
229	1R		7100	7		METALS-ICP	C..	SEE OTHER INDEX.	
230	1R		7101	7		ALUMINUM	C..	SEE OTHER INDEX	
231	1R		7102	7		BORON	C..	SEE OTHER INDEX	
232	1R		7105	7		IRON	C..	SEE OTHER INDEX	
233	SPIKE		9305	9HCJ		GC/MS	A..	SEE ATTACHED	
234	SPIKE DUP		9305	9HCJ		GC/MS	A..	SEE ATTACHED	
235	PLASTIC 1R		7100	7		METALS-ICP	C..	SEE OTHER INDEX	
236	PLASTIC 1R		7110	7		ZIRCONIUM	C..	SEE OTHER INDEX	
237	PLASTIC 1R		7111	7		CALCIUM	C..	SEE OTHER INDEX	
238	1R		7100	7		METALS-ICP	C..	SEE OTHER INDEX	
239	1R		7101	7		ALUMINUM	C..	SEE OTHER INDEX	
240	GCMS VIAL2		7100	7CBG		METALS-ICP	C..	See Individual Elements Below	
241	GCMS VIAL2		7101	7CBG		ALUMINUM	C..	> .956797 MOLAR	
242	GCMS VIAL2		7102	7CBG		BORON	C..	< 4.07588E-02 MOLAR	
243	GCMS VIAL2		7105	7CBG		IRON	A..	2.32868E-02+-1.5307E-03 MOLAR	
244	GCMS VIAL2		7110	7CBG		ZIRCONIUM	C..	< 8.16728E-03 MOLAR	
245	GCMS VIAL2		7111	7CBG		CALCIUM	C..	< 1.27546E-02 MOLAR	
246	GCMS VIAL2		7100	7CBG		METALS-ICP	C..	See Individual Elements Below	
247	GCMS VIAL2		7101	7CBG		ALUMINUM	C..	> .039455 MOLAR	
248	GCMS VIAL2		7102	7CBG		BORON	A..	2.75707E-03+-6.41572E-04 MOLAR	
249	GCMS VIAL2		7105	7CBG		IRON	C..	> .018911 MOLAR	
250	GCMS VIAL2		7110	7CBG		ZIRCONIUM	A..	1.11148E-03+-1.52946E-04 MOLAR	
251	GCMS VIAL2		7111	7CBG		CALCIUM	A..	9.32832E-03+-2.61369E-04 MOLAR	
252	GCMS VIAL2		7100	7CBG		METALS-ICP	C..	See Individual Elements Below	
253	GCMS VIAL2		7101	7CBG		ALUMINUM	A..	1.31327+-3.63784E-02 MOLAR	
254	GCMS VIAL2		7102	7CBG		BORON	C..	< 8.31329E-02 MOLAR	
255	GCMS VIAL2		7105	7CBG		IRON	A..	.024229+-2.30225E-03 MOLAR	
256	GCMS VIAL2		7110	7CBG		ZIRCONIUM	C..	< 1.66582E-02 MOLAR	
257	GCMS VIAL2		7111	7CBG		CALCIUM	C..	< 2.60146E-02 MOLAR	
930822-4		WM-100							13120-200-001940210 23:01 SPLMGT SPLMGT
82	1		47981	7BKH		SP-GR	A..	.998247+-7.79139E-04 @ 25/4	
83	2		47981	7BKH		SP-GR	A..	.99821+-7.79138E-04 @ 25/4	
84	3		47981	7BKH		SP-GR	A..	.998321+-7.79139E-04 @ 25/4	
85	2		67015	7MLE		ACID	A..	< 8.97114E-02 NACID	
86	3		67015	7MLE		ACID	A..	< 8.97114E-02 NACID	
87	2		67920	7BET		URANIUM	A..	< 1.16045E-03 G/L	
88	4		7972	7RLC		UDS	A..	NO VISIBLE SOLIDS	
89	2		57171	7MLE		CHLORIDE	A..	< 15.0301 UG/ML	
90	3		77074	7SRT		NITRATE	A..	5.44794E-05+-9.6136E-06 Molar	
91	2		67093	7MLE		FLUORIDE	A..	< 1.33105E-03 MOLAR	
92	3		77168	7BKH		SULFATE	A..	1.85622E-06+-4.93205E-07 Molar	
93	5		7961	7WDT		RADIOCHEM	C..	Prep Completed 082393 11:27	
94	PLASTIC 1		7961	7WDT		SPEC-CHEM	C..	Prep Completed 082393 11:28	
95	PLASTIC 2		7961	7WDT		SPEC-CHEM	C..	Prep Completed 082393 11:28	

Log Id	# Lab ID	Request Name	Log Type Meth #	L ab	Ana-lyst	Analyte	ARL	Result	Charge Num	Log Approval Info
96	5		63993		3DAO	GAMMA SCAN	C..	** See Index 193.		**
97	5		23381		3JSJ	TOTAL SR	A..	<< 1765.77+-619.312 D/S/ML		
98	5		3205		3IDG	TRANS-UA	A..	< .137597 D/S/ML		
99	5		23011		3JSJ	TRITIUM	A..	< 5.6679 D/SEC/ML		
100	PLASTIC 1		7900		7CBG	EPA-TOX	C..	See Individual Elements Below		
101	PLASTIC 1		7901		7CBG	ARSENIC	A..	< .67931 mg/L		
102	PLASTIC 1		7902		7CBG	BARIUM	A..	< .875559 mg/L		
103	PLASTIC 1		7903		7CBG	CADMIUM	A..	< .863441 mg/L		
104	PLASTIC 1		7904		7CBG	CHROMIUM	A..	< .830681 mg/L		
105	PLASTIC 1		7905		7CBG	LEAD	A..	< .573449 mg/L		
106	PLASTIC 1		7906		7CBG	SELENIUM	A..	.849554+-.309505 mg/L		
107	PLASTIC 1		7907		7CBG	SILVER	A..	< .774906 mg/L		
108	PLASTIC 1		7908		7CBG	NICKEL	A..	< .806555 mg/L		
109	PLASTIC 2		7900		7	EPA-TOX	C..	NOT REQUESTED		
110	PLASTIC 2		7901		7	ARSENIC	C..	NOT REQUESTED		
111	PLASTIC 2		7902		7	BARIUM	C..	NOT REQUESTED		
112	PLASTIC 2		7903		7	CADMIUM	C..	NOT REQUESTED		
113	PLASTIC 2		7904		7	CHROMIUM	C..	NOT REQUESTED		
114	PLASTIC 2		7905		7	LEAD	C..	NOT REQUESTED		
115	PLASTIC 2		7906		7	SELENIUM	C..	NOT REQUESTED		
116	PLASTIC 2		7907		7	SILVER	C..	NOT REQUESTED		
117	PLASTIC 2		7908		7	NICKEL	C..	NOT REQUESTED		
118	PLASTIC 1		2809		2LBZ	MERCURY	A..	=Not Detected:DL= 0.0045 mg/l		
119	PLASTIC 2		2809		2LBZ	MERCURY	C..	= Insufficient sample		
120	PLASTIC 1		2330		2	ARSENIC.	C..	SEE METHOD 7901		
121	PLASTIC 2		2330		2	ARSENIC.	C..	SEE METHOD 7901		
122	PLASTIC 1		2340		2	SELENIUM.	C..	SEE METHOD 7906		
123	PLASTIC 2		2340		2	SELENIUM.	C..	SEE METHOD 7906		
124	PLASTIC 1		2110		2JSL	SODIUM	A..	=6.7E-05 Molarity		
125	PLASTIC 1		2190		2JSL	POTASSIUM	A..	=1.5E-06 Molarity		
126	5		67016		7KFM	PH	A..	7.15407+-.035192 pH		
127	6		7016		7	PH	C..	NOT REQUESTED		
128	PLASTIC 1		7961		7WDT	SPEC-CHEM	C..	Prep Completed 082393 11:28		
129	VOA VIAL 1		9305		9HCJ	GCMS-2SRC	C..	SEE LOG 082016 INDEX 365		
130	VOA VIAL 2		9305		9HCJ	GCMS-2SRC	C..	SEE LOG 082016 INDEX 365		
131	PLASTIC 1		7100		7SDN	METALS-ICP	C..	See Individual Elements Below		
132	PLASTIC 1		7101		7SDN	ALUMINUM	A..	< 6.56896E-03 MOLAR		
133	PLASTIC 1		7102		7SDN	BORON	A..	< 3.75619E-03 MOLAR		
134	PLASTIC 1		7103		7	CADMIUM	C..	NOT REQUESTED		
135	PLASTIC 1		7105		7SDN	IRON	A..	< 2.211E-04 MOLAR		
136	PLASTIC 1		7110		7SDN	ZIRCONIUM	A..	< 1.56506E-03 MOLAR		
137	PLASTIC 1		7111		7SDN	CALCIUM	A..	< 2.54008E-03 MOLAR		
138	4		47981		7BKH	SP-GR	A..	.99835+-7.79139E-04 @ 25/4		
162	PLASTIC 2		7961		7WDT	SPEC-CHEM	C..	Prep Completed 082393 11:29		
167	KNOWN		7985		7SDN	FLASHPOINT	C..	Flashed @ 41.0 deg C corrected		
168	5		7985		7SDN	FLASHPOINT	A..	NO Flash @ 60.0 deg C corrected		
193	5		63993		3DAO	CS-137	A..	.792+-.0595 D/S/ML		

Log Index	# Lab ID	Request Name	Meth #	Log Type Lab	Analyst	Analyte	ARL	Charge Num	Log Approval Info Result
140	1		7961	7MLE	RADIOCHEM		C..		Prep Completed 082393 21:34
141	1		63993	3DAO	GAMMA SCAN		A..		** See Index 194 thru 197. **
142	1		23381	3BJS	TOTAL SR		A..		3.91922+-.106201 UCI/ML
143	1		2110	2JSL	SODIUM		A..		=0.048 Molarity
144	1		2190	2JSL	POTASSIUM		A..		=0.0050 Molarity
145	1		77168	7BKH	SULFATE		A..		7.53216E-04+-1.6743E-04 Molar
146	1		77074	7SRT	NITRATE		A..		6.74799+-.614459 Molar
147	1		57171	7MLE	CHLORIDE		A..		70.1416+-16.2677 UG/ML
148	1		7972	7RLC	UDS		A..		* 11.2667 MG/ML
149	1		47981	7WDT	SP-GR		A..		1.21087+-7.80464E-04 @ 25/4
150	1		67015	7MLE	ACID		A..		< 8.97114E-02 NACID
151	1		67093	7MLE	FLUORIDE		A..		< 6.65439E-03 MOLAR
152	1		7961	7MLE	SPECTCHEM		C..		Prep Completed 082393 14:48
153	1		67920	7MLE	URANIUM		A..		4.20262E-03+-8.93985E-04 G/L
154	1		7100	7SDN	METALS-ICP		C..		See Individual Elements Below
155	1		7101	7SDN	ALUMINUM		C..		> .190546 MOLAR
156	1		7102	7SDN	BORON		A..		< 3.75619E-03 MOLAR
157	1		7103	7	CADMIUM		C..		NOT REQUESTED
158	1		7105	7SDN	IRON		A..		6.55824E-03+-3.42343E-04 MOLAR
159	1		7110	7SDN	ZIRCONIUM		A..		< 1.56506E-03 MOLAR
160	1		7111	7SDN	CALCIUM		A..		< 2.54008E-03 MOLAR
173	1		7100	7RAH	METALS-ICP		C..		See Individual Elements Below
174	1		7101	7RAH	ALUMINUM		A..		1.39981+-.366096 MOLAR
177	1		7900	7WDT	EPA-TOX		C..		See Individual Elements Below
178	1		7903	7WDT	CADMIUM		A..		11.9089+-1.07906 mg/L
194	1		63993	3DAO	CO-60		A..		129+-44.1 D/S/ML
195	1		63993	3DAO	CS-134		A..		10400+-376 D/S/ML
196	1		63993	3DAO	CS-137		A..		309000+-9770 D/S/ML
197	1		63993	3DAO	EU-154		A..		662+-89.7 D/S/ML
930901-23		WM-100AT						13120-200-001940204	13:14 SPLMGT SPLMGT
263	1		7961	7MLE	SPECTROCH		C..		Prep Completed 090293 13:29
264	1		33993	3DAO	GAMMA SCAN		C..		** See Index 294 thru 295. **
265	1		23381	3JSJ	TOTAL SR		A..		4.25367E-03+-1.63083E-04 UCI/M
266	1		2110	2JSL	SODIUM		A..		=0.050 Molarity
267	1		2190	2JSL	POTASSIUM		A..		=5.4E-03 Molarity
268	1		77168	7MLE	SULFATE		A..		7.8067E-04+-8.24152E-05 Molar
269	1		77074	7MLE	NITRATE		A..		4.48163+-.645531 Molar
270	1		57171	7MLE	CHLORIDE		C..		< 60.8519 UG/ML
271	1		7972	7MLE	UDS		A..		* 2.33333 MG/ML
272	1		47981	7KFM	SP-GR		A..		1.24505+-7.80487E-04 @ 25/4
273	1		67015	7MLE	ACID		A..		< 8.97114E-02 NACID
274	1		67093	7MLE	FLUORIDE		A..		7.14322E-03+-3.61877E-04 MOLAR
275	1		7961	7MLE	SPECTROCH		C..		Prep Completed 090293 13:29
276	1		67920	7MLE	URANIUM		A..		3.59186E-03+-8.31949E-04 G/L
277	1		7100	7WDT	METALS-ICP		C..		See Individual Elements Below
278	1		7101	7WDT	ALUMINUM		C..		> .191694 MOLAR
279	1		7102	7WDT	BORON		A..		< 3.77882E-03 MOLAR

Log Idx	# Lab ID	Request Name Meth #	Log Type Lab	Ana-lyst	Analyte	ARL	Result	Charge Num Log Approval Info
280	1	7103	7WDT	CADMIUM		C..	< 9.5635E-04 MOLAR	
281	1	7105	7WDT	IRON		A..	2.38671E-02+-6.51053E-04 MOLAR	
282	1	7110	7WDT	ZIRCONIUM		A..	< 1.57449E-03 MOLAR	
283	1	7111	7WDT	CALCIUM		A..	4.29423E-03+-6.58732E-04 MOLAR	
284	1	7961	7MLE	RADIOCHEM		C..	Prep Completed 090293 13:29	
285	1	7100	7WDT	METALS-ICP		C..	See Individual Elements Below	
286	1	7101	7WDT	ALUMINUM		A..	1.91275+-.040828 MOLAR	
287	1R	57171	7KFM	CHLORIDE		C..	< 155.44 UG/ML	
288	1	7900	7WDT	EPA-TOX		C..	See Individual Elements Below	
289	1	7903	7WDT	CADMIUM		A..	24.9983+-1.75358 mg/L	
290	2R	57171	7KFM	CHLORIDE		A..	45.3354+-8.37305 UG/ML	
291	PLASTIC1R	7100	7WDT	METALS-ICP		C..	See Individual Elements Below	
292	PLASTIC1R	7101	7WDT	ALUMINUM		A..	1.41061+-.147991 MOLAR	
294	1	33993	3DAO	CS-134		A..	14700+-656 D/S/ML	
295	1	33993	3DAO	CS-137		A..	438000+-13800 D/S/ML	

930903-19	WM-100AT							13120-200-001930922 15:02 SPLMGT SPLMGT
728	1	7961	7BET	RADIO CHEM		C..	Prep Completed 090493 19:29	
729	1	63993	3DAO	GAMMA SCAN		C..	** See Index 820 thru 823. **	
730	1	23381	3BJS	TOTAL SR		A..	4.08916+-.102223 UCI/ML	
731	1	2110	2JSL	SODIUM		A..	=0.049 Molarity	
732	1	2190	2JSL	POTASSIUM		A..	=6.0E-03 Molarity	
733	1	77168	7BET	SULFATE		A..	4.9744E-04+-7.58426E-05 Molar	
734	1	77074	7BET	NITRATE		A..	3.94383+-.23135 Molar	
735	1	57171	7RLC	CHLORIDE		A..	23.156+-4.18063 UG/ML	
736	1	7972	7RAH	UDS		A..	* 1.68 MG/ML	
737	1	47981	7RAH	SP-GR		A..	1.23005+-7.80485E-04 @ 25/4	
738	1	67015	7BGP	ACID		A..	< .136135 NACID	
739	1	67093	7BGP	FLUORIDE		A..	< 7.96535E-03 MOLAR	
740	1	7961	7BET	SPECT CHEM		C..	Prep Completed 090493 19:30	
741	1	67920	7RLC	URANIUM		A..	1.04237E-02+-1.37579E-03 G/L	
742	1	7100	7SDN	METALS-ICP		C..	See Individual Elements Below	
743	1	7101	7SDN	ALUMINUM		C..	> .190546 MOLAR	
744	1	7102	7SDN	BORON		A..	< 4.84314E-03 MOLAR	
745	1	7103	7	CADMIUM		C..	SEE INDEX 809	
746	1	7105	7SDN	IRON		A..	1.84785E-02+-6.4824E-04 MOLAR	
747	1	7110	7SDN	ZIRCONIUM		A..	< 1.39699E-03 MOLAR	
748	1	7111	7SDN	CALCIUM		A..	4.1136E-03+-6.3767E-04 MOLAR	
791	2	47981	7RAH	SP-GR		A..	1.22971+-7.80485E-04 @ 25/4	
792	3	47981	7RAH	SP-GR		A..	1.22921+-7.80484E-04 @ 25/4	
793	4	47981	7RAH	SP-GR		A..	1.22897+-7.80484E-04 @ 25/4	
804	1	7100	7SDN	METALS-ICP		C..	See Individual Elements Below	
805	1	7101	7SDN	ALUMINUM		A..	1.6911+-7.25564E-02 MOLAR	
808	1	7100	7SDN	METALS-ICP		C..	See Individual Elements Below	
809	1	7103	7SDN	CADMIUM		A..	< 1.30499E-03 MOLAR	
820	1	63993	3DAO	CO-60		A..	311+-54.5 D/S/ML	
821	1	63993	3DAO	CS-134		A..	12100+-442 D/S/ML	
822	1	63993	3DAO	CS-137		A..	371000+-10500 D/S/ML	

Log # Idx	Lab ID	Request Name / Meth #	Log Type / Lab Analyst	Analyte	ARL	Charge Num / Result	Log Approval Info
823 1		63993	3DAO	EU-154	A..	768+-109 D/S/ML	
930903-20	WM-100AT					13120-200-001930922 15:17	SPLMGT SPLMGT
749 1		7961	7BET	RADIO CHEM	C..	Prep Completed 090493 19:35	
750 1		73993	3DAO	GAMMA SCAN	C..	** See Index 824 thru 827. **	
751 1		23381	3BJS	TOTAL SR	A..	4.25436+-.104309 UCI/ML	
752 1		2110	2JSL	SODIUM	A..	=0.051 Molarity	
753 1		2190	2JSL	POTASSIUM	A..	=6.0E-03 Molarity	
754 1		77168	7BET	SULFATE	A..	4.35997E-04+-7.22972E-05 Molar	
755 1		77074	7BET	NITRATE	A..	3.9671+-.23124 Molar	
756 1		57171	7RLC	CHLORIDE	A..	17.0564+-4.02563 UG/ML	
757 1		7972	7RAH	UDS	A..	* 1.19 MG/ML	
758 1		47981	7RAH	SP-GR	A..	1.22274+-7.8048E-04 @ 25/4	
759 1		67015	7BGP	ACID	A..	< .136135 NACID	
760 1		67093	7BGP	FLUORIDE	A..	< 7.96535E-03 MOLAR	
761 1		7961	7BET	SPECT CHEM	C..	Prep Completed 090493 19:30	
762 1		67920	7RLC	URANIUM	A..	3.78881E-03+-8.52444E-04 G/L	
763 1		7100	7SDN	METALS-ICP	C..	See Individual Elements Below	
764 1		7101	7SDN	ALUMINUM	C..	> .190546 MOLAR	
765 1		7102	7SDN	BORON	A..	< 4.84314E-03 MOLAR	
766 1		7103	7	CADMIUM	C..	SEE INDEX 811	
767 1		7105	7SDN	IRON	A..	.018643+-6.51177E-04 MOLAR	
768 1		7110	7SDN	ZIRCONIUM	A..	< 1.39699E-03 MOLAR	
769 1		7111	7SDN	CALCIUM	A..	4.17561E-03+-6.40325E-04 MOLAR	
794 2		47981	7RAH	SP-GR	A..	1.23732+-7.80487E-04 @ 25/4	
795 3		47981	7RAH	SP-GR	A..	1.2352+-7.80487E-04 @ 25/4	
796 4		47981	7RAH	SP-GR	A..	1.22933+-7.80484E-04 @ 25/4	
806 1		7100	7SDN	METALS-ICP	C..	See Individual Elements Below	
807 1		7101	7SDN	ALUMINUM	A..	1.33428+-6.51375E-02 MOLAR	
810 1		7100	7SDN	METALS-ICP	C..	See Individual Elements Below	
811 1		7103	7SDN	CADMIUM	A..	< 1.30499E-03 MOLAR	
824 1		73993	3DAO	CO-60	A..	441+-62.3 D/S/ML	
825 1		73993	3DAO	CS-134	A..	14600+-508 D/S/ML	
826 1		73993	3DAO	CS-137	A..	486000+-15100 D/S/ML	
827 1		73993	3DAO	EU-154	A..	1170+-115 D/S/ML	
930903-21	WM-100AT					13120-200-001930922 15:16	SPLMGT SPLMGT
770 1		7961	7BET	RADIO CHEM	C..	Prep Completed 090493 19:36	
771 1		83993	3DAO	GAMMA SCAN	C..	** See Index 828 thru 831. **	
772 1		23381	3BJS	TOTAL SR	A..	4.23037+-.104009 UCI/ML	
773 1		2110	2JSL	SODIUM	A..	=0.048 Molarity	
774 1		2190	2JSL	POTASSIUM	A..	=5.9E-03 Molarity	
775 1		77168	7BET	SULFATE	C..	NO3 SPL CTS HIGHER THAN C.S. CT	
776 1		77074	7BET	NITRATE	A..	4.4177+-.229134 Molar	
777 1		57171	7RLC	CHLORIDE	A..	24.0692+-4.20335 UG/ML	
778 1		7972	7RLC	UDS	A..	* 1.55789 MG/ML	
779 1		47981	7RAH	SP-GR	A..	1.22406+-7.80481E-04 @ 25/4	
780 1		67015	7BGP	ACID	A..	< .136135 NACID	
781 1		67093	7BGP	FLUORIDE	C..	< 7.96535E-03 MOLAR	

Log Idx	# Lab ID	Request Name Meth #	Log Type Lab	Analyst	Analyte	ARL	Charge Num Log Approval Info Result
782	1	7961	7	BET	SPECT CHEM	C..	Prep Completed 090493 19:31
783	1	67920	7	RLC	URANIUM	A..	3.59557E-03+-8.3234E-04 G/L
784	1	7100	7	SDN	METALS-ICP	C..	See Individual Elements Below
785	1	7101	7	SDN	ALUMINUM	C..	> .190546 MOLAR
786	1	7102	7	SDN	BORON	A..	< 4.84314E-03 MOLAR
787	1	7103	7		CADMIUM	C..	SEE INDEX 813
788	1	7105	7	SDN	IRON	A..	.018899+-6.55724E-04 MOLAR
789	1	7110	7	SDN	ZIRCONIUM	A..	< 1.39699E-03 MOLAR
790	1	7111	7	SDN	CALCIUM	A..	4.33933E-03+-6.47285E-04 MOLAR
797	2	47981	7	RAH	SP-GR	A..	1.23281+-7.80486E-04 @ 25/4
798	3	47981	7	RAH	SP-GR	A..	1.22992+-7.80485E-04 @ 25/4
799	4	47981	7	RAH	SP-GR	A..	1.22116+-7.80478E-04 @ 25/4
800	1	67093	7	BGP	FLUORIDE	A..	9.76166E-03+-1.30172E-03 MOLAR
801	2	77168	7	BET	SULFATE	A..	8.04588E-04+-1.07187E-04 Molar
802	1	7100	7	SDN	METALS-ICP	C..	See Individual Elements Below
803	1	7101	7	SDN	ALUMINUM	A..	1.4426+-6.74725E-02 MOLAR
812	1	7100	7	SDN	METALS-ICP	C..	See Individual Elements Below
813	1	7103	7	SDN	CADMIUM	A..	< 1.30499E-03 MOLAR
828	1	83993	3	DAO	CO-60	A..	470+-64.8 D/S/ML
829	1	83993	3	DAO	CS-134	A..	14000+-504 D/S/ML
830	1	83993	3	DAO	CS-137	A..	438000+-14300 D/S/ML
831	1	83993	3	DAO	EU-154	A..	1190+-140 D/S/ML

********** END **********

Log Search

Date of Search: 2003-06-09 16:27:03.545 Run by: JEFF LONG

****

Search Criteria:

Start Log.....:930101 1
End Log.....:931231 14
Log Approval.:ALL Logs
Result Type..:All Entries
Lab/Group....:ALL Groups
Name Column..:Lab Sample ID
Request Name..:*WM-102*

Total # Logs Found...: 6
Total # Results Found: 432

****

Log # Id x	Lab ID	Request Name	Meth #	La b	Log Type Ana- lyst	Analyte	ARL	Result	Charge Num / Log Approval Info
930505-14	WM-102:CH								13120-200-001940209 23:08 SPLMGT SPLMGT
508 1			47981		7MLE	SP-GR	A..	1.17066+-6.89039E-04 @ 25/4	
509 2			47981		7MLE	SP-GR	A..	1.17051+-6.8904E-04 @ 25/4	
510 3			47981		7MLE	SP-GR	A..	1.17048+-6.8904E-04 @ 25/4	
511 4			47981		7MLE	SP-GR	A..	1.17053+-6.8904E-04 @ 25/4	
512 2			67015		7MLE	ACID	A..	< .229527 NACID	
513 3			67015		7MLE	ACID	A..	< .229527 NACID	
514 2			67920		7BGP	URANIUM	A..	< 4.25198E-03 G/L	
515 4			7972		7SDN	UDS	A..	* 352.041 UG/ML	
516 2			57171		7MLE	CHLORIDE	A..	< 36.3961 UG/ML	
517 3			77074		7SLI	NITRATE	A..	2.70904+-.178567 Molar	
518 2			67093		7AWO	FLUORIDE	A..	90.8023+-12.1744 UG/ML	
519 3			77168		7SLI	SULFATE	C..	< 2.76176E-02 Molar	
520 5			7961		7MLE	RADIOCHEM	C..	Prep Completed 050693 05:26	
521 PLASTIC 1			7961		7MLE	SPEC CHEM	C..	Prep Completed 050693 05:27	
522 PLASTIC 2			7961		7MLE	SPEC CHEM	C..	Prep Completed 050693 05:28	
523 5			33993		3DAO	GAMMA SCAN	C..	** See Index 812 thru 814. **	
524 5			23381		3BJS	TOTAL SR	A..	37094.9+-1409.7 D/S/ML	
525 5			3998		3	TRANS-UA	C..	SEE INDEX 738 AND 739	
526 5			23011		3JSJ	TRITIUM	A..	< 16.3201 D/SEC/ML	
527 PLASTIC 1			7100		7SDN	METALS-ICP	C..	See Individual Elements Below	
528 PLASTIC 1			7101		7SDN	ALUMINUM	C..	> .186818 MOLAR	
529 PLASTIC 1			7102		7SDN	BORON	A..	< 3.68268E-03 MOLAR	
530 PLASTIC 1			7105		7SDN	IRON	A..	2.88252E-02+-7.08747E-04 MOLAR	
531 PLASTIC 1			7110		7SDN	ZIRCONIUM	A..	< 1.53443E-03 MOLAR	
532 PLASTIC 1			7111		7SDN	CALCIUM	A..	< 2.49037E-03 MOLAR	
533 PLASTIC 1			7900		7RAH	EPA-TOX	C..	See Individual Elements Below	
534 PLASTIC 1			7901		7RAH	ARSENIC	C..	< 29.4377 mg/L	
535 PLASTIC 1			7902		7RAH	BARIUM	A..	< 32.6799 mg/L	
536 PLASTIC 1			7903		7RAH	CADMIUM	C..	< 42.3012 mg/L	

Log Id	# Lab ID	Request Name	Log Type Meth #	Lab	Ana-lyst	Analyte	Charge Num ARL	Log Approval Info Result
537	PLASTIC 1		7904	7RAH		CHROMIUM	C..	< 30.983 mg/L
538	PLASTIC 1		7905	7RAH		LEAD	C..	< 43.9272 mg/L
539	PLASTIC 1		7906	7RAH		SELENIUM	C..	49.1119+-14.5269 mg/L
540	PLASTIC 1		7907	7RAH		SILVER	C..	< 26.5997 mg/L
541	PLASTIC 1		7908	7RAH		NICKEL	A..	< 47.2862 mg/L
542	PLASTIC 2		7900	7RAH		EPA-TOX	C..	See Individual Elements Below
543	PLASTIC 2		7901	7RAH		ARSENIC	C..	< 29.4377 mg/L
544	PLASTIC 2		7902	7RAH		BARIUM	A..	< 32.6799 mg/L
545	PLASTIC 2		7903	7RAH		CADMIUM	C..	< 42.3012 mg/L
546	PLASTIC 2		7904	7RAH		CHROMIUM	C..	< 30.983 mg/L
547	PLASTIC 2		7905	7RAH		LEAD	C..	< 43.9272 mg/L
548	PLASTIC 2		7906	7RAH		SELENIUM	C..	37.0847+-13.0129 mg/L
549	PLASTIC 2		7907	7RAH		SILVER	C..	< 26.5997 mg/L
550	PLASTIC 2		7908	7RAH		NICKEL	A..	< 47.2862 mg/L
551	PLASTIC 1		2809	2LBZ		MERCURY	A..	=Not Detected:DL= 0.075 mg/l
552	PLASTIC 2		2809	2LBZ		MERCURY	A..	=Not Detected:DL= 0.075 mg/l
553	PLASTIC 1		2330	2		ARSENIC.	C..	SEE RAL DATA
554	PLASTIC 2		2330	2		ARSENIC.	C..	SEE RAL DATA
555	PLASTIC 1		2340	2		SELENIUM.	C..	SEE RAL DATA
556	PLASTIC 2		2340	2		SELENIUM.	C..	SEE RAL DATA
557	PLASTIC 1		2119	2JSL		SODIUM	A..	=1.0E-02 Molarity
558	PLASTIC 1		2199	2JSL		POTASSIUM	A..	=8.2E-03 Molarity
559	5		67016	7AWO		PH	A..	< .5 pH
560	PLASTIC 1		7961	7MLE		SPEC CHEM	C..	Prep Completed 050693 05:29
561	5 RAMP		7985	7CWL		FLASHPOINT	C..	NO Flash @ 60.0 deg C corrected
562	BEG KNW		7985	7CWL		FLASHPOINT	C..	Flashed @ 60.0 deg C corrected
563	VOA VIAL 1		9304	9HCJ		GCMS-2TRAP	A..	SEE ATTACHED
564	VOA VIAL 2		9304	9HCJ		GCMS-2TRAP	A..	SEE ATTACHED
738	5		3202	3IDG		PU-238	A..	3344.39+-122.614 D/S/ML
739	5		3203	3IDG		PU-239	A..	< 74.2257 D/S/ML
751	1		7900	7WDT		EPA-TOX	C..	See Individual Elements Below
752	1		7903	7WDT		CADMIUM	C..	9.49254+-1.37944 mg/L
753	1		7904	7WDT		CHROMIUM	C..	9.35827+-1.83895 mg/L
754	1		7905	7WDT		LEAD	A..	< 4.13354 mg/L
755	1		7907	7WDT		SILVER	A..	< 2.50302 mg/L
756	2		7900	7WDT		EPA-TOX	C..	See Individual Elements Below
757	2		7903	7WDT		CADMIUM	A..	30.5871+-2.73251 mg/L
758	2		7904	7WDT		CHROMIUM	A..	32.1589+-3.17676 mg/L
759	2		7905	7WDT		LEAD	A..	< 4.13354 mg/L
760	2		7907	7WDT		SILVER	A..	< 2.50302 mg/L
795	4		77168	7SLI		SULFATE	A..	1.27844E-03+-8.11336E-05 Molar
812	5		33993	3DAO		RU-106	A..	9250+-1050 D/S/ML
813	5		33993	3DAO		CS-134	A..	35800+-1360 D/S/ML
814	5		33993	3DAO		CS-137	A..	604000+-22900 D/S/ML
828	PLASTIC 1		7100	7SDN		METALS-ICP	C..	See Individual Elements Below
829	PLASTIC 1		7101	7SDN		ALUMINUM	A..	1.18504+-4.32295E-02 MOLAR
840	5 RAMP		7985	7		FLASHPOINT	C..	ENTERED TWICE SEE 561
841	60 CHK		7985	7CWL		FLASHPOINT	A..	NO Flash @ 60.0 deg C corrected
845	PLASTIC 1		7900	7WDT		EPA-TOX	C..	See Individual Elements Below

Log # Index	Request Name / Lab ID	Meth #	Lab	Ana-lyst	Analyte	ARL	Result
846	PLASTIC 1	7903	7	WDT	CADMIUM	C..	45.479+-2.39422 mg/L
847	PLASTIC 1	7904	7	WDT	CHROMIUM	C..	45.9642+-3.9403 mg/L
848	PLASTIC 1	7900	7		EPA-TOX	C..	NOT REQUESTED
867	PLASTIC 1	7900	7	WDT	EPA-TOX	C..	See Individual Elements Below
868	PLASTIC 1	7906	7	WDT	SELENIUM	C..	< 2.56205 mg/L
869	PLASTIC 2	7900	7	WDT	EPA-TOX	C..	See Individual Elements Below
870	PLASTIC 2	7906	7	WDT	SELENIUM	C..	< 2.56205 mg/L
876	PLASTIC 1	7961	7	RAH	AS/SE PREP	C..	Prep Completed 091093 10:19
877	PLASTIC 2	7961	7	RAH	SPECTROCHE	C..	Prep Completed 091093 10:19
883	PLASTIC 1R	7900	7	JMK	EPA-TOX	C..	See Individual Elements Below
884	PLASTIC 1R	7901	7	JMK	ARSENIC	A..	< 3.89309 mg/L
885	PLASTIC 2R	7900	7	JMK	EPA-TOX	C..	See Individual Elements Below
886	PLASTIC 2R	7901	7	JMK	ARSENIC	A..	< 3.89309 mg/L
887	PLASTIC 1R	7900	7	JMK	EPA-TOX	C..	See Individual Elements Below
888	PLASTIC 1R	7906	7	JMK	SELENIUM	A..	< .991639 mg/L
889	PLASTIC 2R	7900	7	JMK	EPA-TOX	C..	See Individual Elements Below
890	PLASTIC 2R	7906	7	JMK	SELENIUM	A..	< .991639 mg/L
911	PLASTIC 1R	7900	7	SDN	EPA-TOX	C..	See Individual Elements Below
912	PLASTIC 1R	7903	7	SDN	CADMIUM	A..	31.3152+-1.52779 mg/L
913	PLASTIC 1R	7904	7	SDN	CHROMIUM	A..	30.1857+-3.00239 mg/L
916	SPIKE	9304	9	HCJ	GCMS-2TRAP	A..	SEE ATTACHED
930505-15	WM-102:CH						13120-200-001940209 22:32 SPLMGT SPLMGT
565	1	47981	7	MLE	SP-GR	A..	1.16163+-6.89136E-04 @ 25/4
566	2	47981	7	MLE	SP-GR	A..	1.17057+-6.89039E-04 @ 25/4
567	3	47981	7	MLE	SP-GR	A..	1.17056+-6.89039E-04 @ 25/4
568	4	47981	7	MLE	SP-GR	A..	1.17052+-6.8904E-04 @ 25/4
569	2	67015	7	MLE	ACID	A..	< .229527 NACID
570	3	67015	7	MLE	ACID	A..	< .229527 NACID
571	2	67920	7	BGP	URANIUM	A..	< 4.25198E-03 G/L
572	4	7972	7	SDN	UDS	A..	* 1755.32 UG/ML
573	2	57171	7	MLE	CHLORIDE	A..	< 36.3961 UG/ML
574	3	77074	7	SLI	NITRATE	A..	2.77898+-.178497 Molar
575	2	67093	7	AWO	FLUORIDE	A..	86.2272+-11.9815 UG/ML
576	3	77168	7	SLI	SULFATE	C..	< 2.76176E-02 Molar
577	5	7961	7	MLE	RADID CHEM	C..	Prep Completed 050693 05:29
578	PLASTIC 1	7961	7	MLE	RADID CHEM	C..	Prep Completed 050693 05:30
579	PLASTIC 2	7961	7	MLE	RADID CHEM	C..	Prep Completed 050693 05:30
580	5	33993	3	DAO	GAMMA SCAN	C..	** See Index 815 thru 816. **
581	5	23381	3	BJS	TOTAL SR	A..	37352.3+-1414.36 D/S/ML
582	5	3998	3		TRANS-UA	C..	SEE INDEX 740 AND 741
583	5	23011	3	JSJ	TRITIUM	A..	< 16.3201 D/SEC/ML
584	PLASTIC 1	7100	7	SDN	METALS-ICP	C..	See Individual Elements Below
585	PLASTIC 1	7101	7	SDN	ALUMINUM	C..	> .189789 MOLAR
586	PLASTIC 1	7102	7	SDN	BORON	A..	< 3.74125E-03 MOLAR
587	PLASTIC 1	7105	7	SDN	IRON	A..	3.31979E-02+-7.68484E-04 MOLAR
588	PLASTIC 1	7110	7	SDN	ZIRCONIUM	A..	< 1.55883E-03 MOLAR
589	PLASTIC 1	7111	7	SDN	CALCIUM	A..	< 2.52998E-03 MOLAR
590	PLASTIC 1	7900	7	RAH	EPA-TOX	C..	See Individual Elements Below

Log Idx	# Lab ID	Request Name	Log Type Meth #	Lab	Ana-lyst	Analyte	ARL	Result
591	PLASTIC 1		7901	7RAH		ARSENIC	C..	< 29.4377 mg/L
592	PLASTIC 1		7902	7RAH		BARIUM	A..	< 32.6799 mg/L
593	PLASTIC 1		7903	7RAH		CADMIUM	C..	< 42.3012 mg/L
594	PLASTIC 1		7904	7RAH		CHROMIUM	C..	< 30.983 mg/L
595	PLASTIC 1		7905	7RAH		LEAD	C..	< 43.9272 mg/L
596	PLASTIC 1		7906	7RAH		SELENIUM	C..	< 24.4469 mg/L
597	PLASTIC 1		7907	7RAH		SILVER	C..	< 26.5997 mg/L
598	PLASTIC 1		7908	7RAH		NICKEL	A..	< 47.2862 mg/L
599	PLASTIC 2		7900	7RAH		EPA-TOX	C..	See Individual Elements Below
600	PLASTIC 2		7901	7RAH		ARSENIC	C..	< 29.4377 mg/L
601	PLASTIC 2		7902	7RAH		BARIUM	A..	< 32.6799 mg/L
602	PLASTIC 2		7903	7RAH		CADMIUM	C..	< 42.3012 mg/L
603	PLASTIC 2		7904	7RAH		CHROMIUM	C..	< 30.983 mg/L
604	PLASTIC 2		7905	7RAH		LEAD	C..	< 43.9272 mg/L
605	PLASTIC 2		7906	7RAH		SELENIUM	C..	32.7313+-12.4197 mg/L
606	PLASTIC 2		7907	7RAH		SILVER	C..	< 26.5997 mg/L
607	PLASTIC 2		7908	7RAH		NICKEL	A..	< 47.2862 mg/L
608	PLASTIC 1		2809	2LBZ		MERCURY	A..	=0.13 mg/l
609	PLASTIC 2		2809	2LBZ		MERCURY	A..	=0.17 mg/l
610	PLASTIC 1		2330	2		ARSENIC.	C..	SEE RAL DATA
611	PLASTIC 2		2330	2		ARSENIC.	C..	SEE RAL DATA
612	PLASTIC 1		2340	2		SELENIUM.	C..	SEE RAL DATA
613	PLASTIC 2		2340	2		SELENIUM.	C..	SEE RAL DATA
614	PLASTIC 1		2119	2JSL		SODIUM	A..	=1.1E-02 Molarity
615	PLASTIC 1		2199	2JSL		POTASSIUM	A..	=8.3E-03 Molarity
616	5		67016	7AWO		PH	A..	< .5 pH
617	PLASTIC 1		7961	7MLE		RADID CHEM	C..	Prep Completed 050693 05:30
618	5 RAMP		7985	7CWL		FLASHPOINT	C..	NO Flash @ 60.0 deg C corrected
619	END KNOWN		7985	7CWL		FLASHPOINT	C..	Flashed @ 60.0 deg C corrected
620	VOA VIAL 1		9304	9HCJ		GCMS-2TRAP	A..	SEE ATTACHED
621	VOA VIAL 2		9304	9HCJ		GCMS-2TRAP	A..	SEE ATTACHED
740	5		3202	3IDG		PU-238	A..	2878.94+-101.325 D/S/ML
741	5		3203	3IDG		PU-239	A..	< 74.2257 D/S/ML
761	4		7900	7WDT		EPA-TOX	C..	See Individual Elements Below
762	4		7903	7WDT		CADMIUM	A..	28.8016+-2.64454 mg/L
763	4		7904	7WDT		CHROMIUM	A..	30.8438+-3.11481 mg/L
764	4		7905	7WDT		LEAD	A..	< 4.13354 mg/L
765	4		7907	7WDT		SILVER	A..	< 2.50302 mg/L
766	5		7900	7WDT		EPA-TOX	C..	See Individual Elements Below
767	5		7903	7WDT		CADMIUM	A..	21.9886+-2.27864 mg/L
768	5		7904	7WDT		CHROMIUM	A..	21.7697+-2.64986 mg/L
769	5		7905	7WDT		LEAD	A..	< 4.13354 mg/L
770	5		7907	7WDT		SILVER	A..	< 2.50302 mg/L
796	4		77168	7SLI		SULFATE	A..	1.35747E-03+-8.25489E-05 Molar
815	5		33993	3DAO		CS-134	A..	41900+-1820 D/S/ML
816	5		33993	3DAO		CS-137	A..	559000+-24900 D/S/ML
826	PLASTIC 1		7100	7SDN		METALS-ICP	C..	See Individual Elements Below
827	PLASTIC 1		7101	7SDN		ALUMINUM	A..	1.00191+-4.27342E-02 MOLAR
842	60 CHK		7985	7CWL		FLASHPOINT	A..	NO Flash @ 60.0 deg C corrected

Log # Index	Lab ID	Request Name	Meth #	Log Type Lab	Ana-lyst	Analyte	ARL	Result
849	VOA VIAL		7900	7WDT	EPA-TOX		C..	See Individual Elements Below
850	VOA VIAL		7903	7WDT	CADMIUM		C..	11.9906+-1.07472 mg/L
851	VOA VIAL		7904	7WDT	CHROMIUM		C..	5.93173+-1.14071 mg/L
852	VOA VIAL		7906	7WDT	SELENIUM		C..	< 2.56205 mg/L
853	VOA VIAL		7900	7WDT	EPA-TOX		C..	See Individual Elements Below
854	VOA VIAL		7906	7WDT	SELENIUM		C..	< 2.56205 mg/L
878	PLASTIC 1		7961	7KFM	SP CHEM		C..	Prep Completed 090993 20:49
879	PLASTIC 1		7961	7KFM	SP CHEM		C..	Prep Completed 090993 20:50
880	PLASTIC 2		7961	7KFM	SP CHEM		C..	Prep Completed 090993 20:50
891	PLASTIC 1R		7900	7JMK	EPA-TOX		C..	See Individual Elements Below
892	PLASTIC 1R		7901	7JMK	ARSENIC		A..	< 3.89309 mg/L
893	PLASTIC 2R		7900	7JMK	EPA-TOX		C..	See Individual Elements Below
894	PLASTIC 2R		7901	7JMK	ARSENIC		A..	< 3.89309 mg/L
895	PLASTIC 1R		7900	7JMK	EPA-TOX		C..	See Individual Elements Below
896	PLASTIC 1R		7906	7JMK	SELENIUM		A..	< .991639 mg/L
897	PLASTIC 2R		7900	7JMK	EPA-TOX		C..	See Individual Elements Below
898	PLASTIC 2R		7906	7JMK	SELENIUM		A..	< .991639 mg/L
905	1RR		7900	7	EPA-TOX		C..	NOT REQUESTED
906	1RR		7906	7	SELENIUM		C..	NOT REQUESTED
907	2RR		7900	7	EPA-TOX		C..	NOT REQUESTED
908	2RR		7906	7	SELENIUM		C..	NOT REQUESTED
909	PLASTIC 1R		7900	7SDN	EPA-TOX		C..	See Individual Elements Below
910	PLASTIC 1R		7903	7SDN	CADMIUM		C..	36.1676+-1.83933 mg/L
917	SPIKE		9304	9HCJ	GCMS-2TRAP		A..	SEE ATTACHED
930505-16		WM-102:CH						13120-200-001940221 10:25 SPLMGT SPLMGT
622	1		47981	7MLE	SP-GR		A..	1.16789+-6.89067E-04 @ 25/4
623	2		47981	7MLE	SP-GR		A..	1.17065+-6.89039E-04 @ 25/4
624	3		47981	7MLE	SP-GR		A..	1.17053+-6.8904E-04 @ 25/4
625	4		47981	7MLE	SP-GR		A..	1.17055+-6.8904E-04 @ 25/4
626	2		67015	7MLE	ACID		A..	< .229527 NACID
627	3		67015	7MLE	ACID		A..	< .229527 NACID
628	2		67920	7BGP	URANIUM		A..	< 4.25198E-03 G/L
629	4		7972	7SDN	UDS		A..	* 8855.55 UG/ML
630	2		57171	7MLE	CHLORIDE		A..	< 36.3961 UG/ML
631	3		77074	7SLI	NITRATE		A..	2.69894+-.178578 Molar
632	2		67093	7AWO	FLUORIDE		A..	58.2337+-10.7303 UG/ML
633	3		77168	7SLI	SULFATE		A..	2.88159E-02+-9.03836E-03 Molar
634	5		7961	7MLE	RADIO CHEM		C..	Prep Completed 050693 05:30
635	PLASTIC 1		7961	7MLE	SPEC CHEM		C..	Prep Completed 050693 05:31
636	PLASTIC 2		7961	7MLE	SPEC CHEM		C..	Prep Completed 050693 05:33
637	5		33993	3DAO	GAMMA SCAN		C..	** See Index 817 thru 821. **
638	5		23381	3BJS	TOTAL SR		A..	37270.1+-1412.87 D/S/ML
639	5		3998	3	TRANS-UA		C..	SEE INDEX 742 AND 743
640	5		23011	3JSJ	TRITIUM		A..	< 16.3201 D/SEC/ML
641	PLASTIC 1		7100	7SDN	METALS-ICP		C..	See Individual Elements Below
642	PLASTIC 1		7101	7SDN	ALUMINUM		C..	< 8.65524E-03 MOLAR
643	PLASTIC 1		7102	7SDN	BORON		A..	< 3.68268E-03 MOLAR
644	PLASTIC 1		7105	7SDN	IRON		A..	< 2.16774E-04 MOLAR

Log #	Request Name	Log Type			Charge Num	Log Approval Info
Idx	Lab ID	Meth #	Lab	Ana-lyst Analyte	ARL	Result
645	PLASTIC 1	7110	7	SDN ZIRCONIUM	A..	< 1.53443E-03 MOLAR
646	PLASTIC 1	7111	7	SDN CALCIUM	A..	< 2.49037E-03 MOLAR
647	PLASTIC 1	7900	7	RAH EPA-TOX	C..	See Individual Elements Below
648	PLASTIC 1	7901	7	RAH ARSENIC	C..	< 29.4377 mg/L
649	PLASTIC 1	7902	7	RAH BARIUM	C..	< 32.6799 mg/L
650	PLASTIC 1	7903	7	RAH CADMIUM	C..	< 42.3012 mg/L
651	PLASTIC 1	7904	7	RAH CHROMIUM	C..	< 30.983 mg/L
652	PLASTIC 1	7905	7	RAH LEAD	C..	< 43.9272 mg/L
653	PLASTIC 1	7906	7	RAH SELENIUM	C..	29.0911+-11.9012 mg/L
654	PLASTIC 1	7907	7	RAH SILVER	C..	< 26.5997 mg/L
655	PLASTIC 1	7908	7	RAH NICKEL	C..	< 47.2862 mg/L
656	4	7900	7	WDT EPA-TOX	C..	See Individual Elements Below
657	4	7901	7	WDT ARSENIC	A..	< 2.77008 mg/L
658	4	7902	7	WDT BARIUM	A..	< 3.07517 mg/L
659	4	7903	7	WDT CADMIUM	A..	29.6708+-2.68771 mg/L
660	4	7904	7	WDT CHROMIUM	A..	32.1341+-3.17561 mg/L
661	4	7905	7	WDT LEAD	A..	< 4.13354 mg/L
662	4	7906	7	WDT SELENIUM	C..	< 2.30045 mg/L
663	4	7907	7	WDT SILVER	A..	< 2.50302 mg/L
664	4	7908	7	WDT NICKEL	A..	5.5652+-.375134 mg/L
665	PLASTIC 1	2809	2	LBZ MERCURY	A..	=Not Detected:DL= 0.075 mg/l
666	PLASTIC 2	2809	2	LBZ MERCURY	A..	=0.090 mg/l
667	PLASTIC 1	2330	2	ARSENIC.	C..	SEE RAL DATA
668	PLASTIC 2	2330	2	ARSENIC.	C..	SEE RAL DATA
669	PLASTIC 1	2340	2	SELENIUM.	C..	SEE RAL DATA
670	PLASTIC 2	2340	2	SELENIUM.	C..	SEE RAL DATA
671	PLASTIC 1	2119	2	JSL SODIUM	A..	=9.5E-03 Molarity
672	PLASTIC 1	2199	2	JSL POTASSIUM	A..	=8.2E-03 Molarity
673	5	67016	7	SDN PH	A..	< .5 pH
674	PLASTIC 1	7961	7	MLE SPEC CHEM	C..	Prep Completed 050693 05:33
675	5 RAMP	7985	7	CWL FLASHPOINT	C..	NO Flash @ 60.0 deg C corrected
676	BEG KNOWN	7985	7	CWL FLASHPOINT	C..	Flashed @ 60.0 deg C corrected
677	VOA VIAL 1	9304	9	HCJ GCMS-2TRAP	A..	SEE ATTACHED
678	VOA VIAL 2	9304	9	HCJ GCMS-2TRAP	A..	SEE ATTACHED
742	5	3202	3	IDG PU-238	A..	3129.71+-112.774 D/S/ML
743	5	3203	3	IDG PU-239	A..	< 74.2257 D/S/ML
771	5	7900	7	WDT EPA-TOX	C..	See Individual Elements Below
772	5	7903	7	WDT CADMIUM	A..	29.201+-2.66446 mg/L
773	5	7904	7	WDT CHROMIUM	A..	30.9679+-3.1207 mg/L
774	5	7905	7	WDT LEAD	A..	< 4.13354 mg/L
775	5	7907	7	WDT SILVER	A..	< 2.50302 mg/L
817	5	33993	3	DAO CO-60	A..	412+-48.8 D/S/ML
818	5	33993	3	DAO RU-106	A..	10900+-1340 D/S/ML
819	5	33993	3	DAO SB-125	A..	3690+-589 D/S/ML
820	5	33993	3	DAO CS-134	A..	43200+-1830 D/S/ML
821	5	33993	3	DAO CS-137	A..	744000+-43300 D/S/ML
822	4	7900	7	WDT EPA-TOX	C..	See Individual Elements Below
823	4	7906	7	WDT SELENIUM	C..	< 1.14893 mg/L
824	5	7900	7	WDT EPA-TOX	C..	See Individual Elements Below

Log Idx	# Lab ID	Request Name	Meth #	Lab	Ana-lyst	Analyte	ARL	Result
825	5		7906	7	WDT	SELENIUM	C..	3.70214+-.832765 mg/L
843	60 CHK		7985	7	CWL	FLASHPOINT	A..	NO Flash @ 60.0 deg C corrected
844	END KNOWN		7985	7	CWL	FLASHPOINT	C..	Flashed @ 60.0 deg C corrected
855	PLASTIC 1		7100	7	CBG	METALS-ICP	C..	See Individual Elements Below
856	PLASTIC 1		7101	7	CBG	ALUMINUM	A..	.618728+-3.79931E-02 MOLAR
857	PLASTIC 1		7900	7	VJJ	EPA-TOX	C..	See Individual Elements Below
858	PLASTIC 1		7901	7	VJJ	ARSENIC	C..	< 6.93498 mg/L
859	2		67093	7	BKH	FLUORIDE	A..	79.1488+-6.80393 UG/ML
860	PLASTIC 1		7100	7	CBG	METALS-ICP	C..	See Individual Elements Below
861	PLASTIC 1		7105	7	CBG	IRON	A..	2.15423E-02+-2.18548E-03 MOLAR
862	PLASTIC 1		7900	7	WDT	EPA-TOX	C..	See Individual Elements Below
863	PLASTIC 1		7906	7	WDT	SELENIUM	C..	< 2.56205 mg/L
864	PLASTIC 2		7900	7	WDT	EPA-TOX	C..	See Individual Elements Below
865	PLASTIC 2		7906	7	WDT	SELENIUM	C..	< 2.56205 mg/L
866	3		77168	7	MLE	SULFATE	A..	2.00196E-03+-1.87812E-04 Molar
871	PLASTIC 1		7900	7	VJJ	EPA-TOX	C..	See Individual Elements Below
872	PLASTIC 1		7902	7	VJJ	BARIUM	A..	< 1.83164 mg/L
873	PLASTIC 1		7908	7	VJJ	NICKEL	A..	< 3.76216 mg/L
874	PLASTIC 2		7100	7	SDN	METALS-ICP	C..	See Individual Elements Below
875	PLASTIC 2		7101	7	SDN	ALUMINUM	A..	1.09141+-.363898 MOLAR
881	PLASTIC 1		7961	7	KFM	SP CHEM	C..	Prep Completed 090893 23:19
882	AS/SE PREP		7961	7	KFM	SP CHEM	C..	Prep Completed 090893 23:20
899	PLASTIC 2R		7900	7	JMK	EPA-TOX	C..	See Individual Elements Below
900	PLASTIC 2R		7901	7	JMK	ARSENIC	A..	< 3.89309 mg/L
901	PLASTIC 1R		7900	7	JMK	EPA-TOX	C..	See Individual Elements Below
902	PLASTIC 1R		7906	7	JMK	SELENIUM	A..	< .991639 mg/L
903	PLASTIC 2R		7900	7	JMK	EPA-TOX	C..	See Individual Elements Below
904	PLASTIC 2R		7906	7	JMK	SELENIUM	A..	< .991639 mg/L
914	PLASTIC 1R		7900	7	SDN	EPA-TOX	C..	See Individual Elements Below
915	PLASTIC 1R		7908	7	SDN	NICKEL	C..	6.98209+-2.56196 mg/L
918	SPIKE		9304	9	HCJ	GCMS-2TRAP	A..	SEE ATTACHED
930505-17		WM-102:CH						13120-200-001940209 20:29 SPLMGT SPLMGT
679	1		7981	7		SP-GR	C..	*(CANCELLED BY REQUESTOR)*
680	2		7981	7		SP-GR	C..	*(CANCELLED BY REQUESTOR)*
681	2		67015	7	MLE	ACID	A..	< .229527 NACID
682	2		7920	7		URANIUM	C..	*(CANCELLED BY REQUESTOR)*
683	4		7972	7		UDS	C..	*(CANCELLED BY REQUESTOR)*
684	2		57171	7	MLE	CHLORIDE	A..	< 7.24282 UG/ML
685	3		7074	7		NITRATE	C..	*(CANCELLED BY REQUESTOR)*
686	2		7093	7		FLUORIDE	C..	*(CANCELLED BY REQUESTOR)*
687	3		7168	7		SULFATE	C..	*(CANCELLED BY REQUESTOR)*
688	5		7961	7	MLE	RADIO CHEM	C..	Prep Completed 050693 04:07
689	PLASTIC 1		7961	7	MLE	SPEC CHEM	C..	Prep Completed 050693 04:08
690	5		33993	3	DAO	GAMMA SCAN	A..	** No Nuclides Identified. **
691	5		23381	3	BJS	TOTAL SR	A..	<< 3.74185+-4.81351 D/S/ML
692	5		3998	3		TRANS-UA	C..	*(CANCELLED BY REQUESTOR)*
693	5		3011	3		TRITIUM	C..	*(CANCELLED BY REQUESTOR)*
694	PLASTIC 1		7100	7		METALS-ICP	C..	*(CANCELLED BY REQUESTOR)*

Log Idx	# Lab ID	Request Name	Meth #	Lab	Ana-lyst	Analyte	ARL	Result
695	PLASTIC 1		7101	7		ALUMINUM	C..	*(CANCELLED BY REQUESTOR)*
696	PLASTIC 1		7102	7		BORON	C..	*(CANCELLED BY REQUESTOR)*
697	PLASTIC 1		7105	7		IRON	C..	*(CANCELLED BY REQUESTOR)*
698	PLASTIC 1		7110	7		ZIRCONIUM	C..	*(CANCELLED BY REQUESTOR)*
699	PLASTIC 1		7111	7		CALCIUM	C..	*(CANCELLED BY REQUESTOR)*
700	PLASTIC 1		7900	7WDT		EPA-TOX	C..	See Individual Elements Below
701	PLASTIC 1		7901	7WDT		ARSENIC	A..	< .551356 mg/L
702	PLASTIC 1		7902	7WDT		BARIUM	A..	< .612081 mg/L
703	PLASTIC 1		7903	7WDT		CADMIUM	A..	< .792283 mg/L
704	PLASTIC 1		7904	7WDT		CHROMIUM	A..	< .580298 mg/L
705	PLASTIC 1		7905	7WDT		LEAD	A..	< .822739 mg/L
706	PLASTIC 1		7906	7WDT		SELENIUM	A..	< .457881 mg/L
707	PLASTIC 1		7907	7WDT		SILVER	A..	< .498201 mg/L
708	PLASTIC 1		7908	7WDT		NICKEL	A..	< .88565 mg/L
709	PLASTIC 2		7900	7		EPA-TOX	C..	*(CANCELLED BY REQUESTOR)*
710	PLASTIC 2		7901	7		ARSENIC	C..	*(CANCELLED BY REQUESTOR)*
711	PLASTIC 2		7902	7		BARIUM	C..	*(CANCELLED BY REQUESTOR)*
712	PLASTIC 2		7903	7		CADMIUM	C..	*(CANCELLED BY REQUESTOR)*
713	PLASTIC 2		7904	7		CHROMIUM	C..	*(CANCELLED BY REQUESTOR)*
714	PLASTIC 2		7905	7		LEAD	C..	*(CANCELLED BY REQUESTOR)*
715	PLASTIC 2		7906	7		SELENIUM	C..	*(CANCELLED BY REQUESTOR)*
716	PLASTIC 2		7907	7		SILVER	C..	*(CANCELLED BY REQUESTOR)*
717	PLASTIC 2		7908	7		NICKEL	C..	*(CANCELLED BY REQUESTOR)*
718	PLASTIC 1		2809	2LBZ		MERCURY	A..	=Not Detected:DL= 0.00075 mg/l
719	PLASTIC 2		2809	2		MERCURY	C..	*(CANCELLED BY REQUESTOR)*
720	PLASTIC 1		2339	2		ARSENIC.	C..	SEE ABOVE
721	PLASTIC 2		2330	2		ARSENIC.	C..	*(CANCELLED BY REQUESTOR)*
722	PLASTIC 1		2349	2		SELENIUM.	C..	SEE ABOVE
723	PLASTIC 2		2340	2		SELENIUM.	C..	*(CANCELLED BY REQUESTOR)*
724	PLASTIC 1		2111	2		SODIUM	C..	*(CANCELLED BY REQUESTOR)*
725	PLASTIC 1		2190	2		POTASSIUM	C..	*(CANCELLED BY REQUESTOR)*
726	5		7016	7		PH	C..	NOT REQUESTED
727	PLASTIC 1		7961	7MLE		SPEC CHEM	C..	Prep Completed 050693 04:09
728	5		7985	7SDN		FLASHPOINT	A..	NO Flash @ 60.0 deg C corrected
729	KNOWN		7985	7SDN		FLASHPOINT	C..	Flashed @ 41.0 deg C corrected
730	VOA VIAL 1		9304	9HCJ		GCMS-2TRAP	A..	SEE ATTACHED

930513-14	WM-102ET		????					35200-400-001951205 10:23 JEAN M CASTEEL
110	1		3281	3		NI-63	C..	Entry Cancelled
111	1		3431	3		TECHNETIUM	C..	Entry Cancelled
112	1		24900	4TEL		URANIUM	A..	* 6.54354E-03 G/KG
113	1		24901	4TEL		U-234	A..	DATA NOT AVALIABLE
114	1		24902	4TEL		U-235	A..	DATA NOT AVALIABLE
115	1		24903	4TEL		U-236	A..	DATA NOT AVALIABLE
116	1		24904	4TEL		U-238	A..	DATA NOT AVALIABLE
117	1		24905	4TEL		U FOR ACC.	A..	* 6.54354E-03 G/KG
118	1		17929	7BGP		URAN. PREP	C..	071993 09:26 TEL 071993 13:29
119	1		43204	3IDG		NP-237	A..	< 137.824 D/S/ML

Log # Idx	Lab ID	Request Name / Meth #	Log Type / Lab	Ana-lyst	Analyte	ARL	Charge Num / Result / Log Approval Info
120 1		3202	3IDG	PU-238		A..	3952.09+-326.425 D/S/ML
121 1		3203	3IDG	PU-239		A..	< 688.675 D/S/ML
122 1		3200	3	PU-240		C..	Entry Cancelled
123 1		3200	3	PU-241		C..	Entry Cancelled
124 1		3200	3	PU-242		C..	Entry Cancelled
125 1		3201	3IDG	AM-241		A..	< 97.3643 D/S/ML
126 1		3201	3IDG	CM-244		A..	< 9.73E+1 D/S/ML
127 1		7961	7SDN	RADIO CHEM		C..	Prep Completed 062793 10:36
475 4		2110	2JSL	SODIUM		A..	=1.2E-02 Molarity
476 4		2190	2JSL	POTASSIUM		A..	=9.4E-03 Molarity
477 4		7961	7KFM	SP CHEM		C..	Prep Completed 071693 23:04
478 4		7100	7SDN	METALS-ICP		C..	See Individual Elements Below
479 4		7101	7SDN	ALUMINUM		C..	> .190546 MOLAR
480 4		7102	7SDN	BORON		A..	< 3.75619E-03 MOLAR
481 4		7105	7SDN	IRON		A..	.033275+-7.70884E-04 MOLAR
482 4		7110	7SDN	ZIRCONIUM		A..	< 1.56506E-03 MOLAR
483 4		7111	7SDN	CALCIUM		A..	< 2.54008E-03 MOLAR
484 4		67093	7KFM	FLUORIDE		A..	96.1171+-6.6832 UG/ML
485 4		7900	7SDN	EPA-TOX		C..	See Individual Elements Below
486 4		7903	7SDN	CADMIUM		A..	27.0457+-1.81945 mg/L
487 4		77168	7KFM	SULFATE		A..	1.55571E-03+-9.66199E-05 Molar
488 4		77074	7KFM	NITRATE		A..	3.51511+-5.05486E-02 Molar
489 4		57171	7RLC	CHLORIDE		A..	< 30.1508 UG/ML
490 5		7972	7BGP	UDS		A..	* 15 UG/ML
491 2		7980	7BGP	SP-GR		A..	1.15962+-9.87017E-03 @ 25/4
492 3		7980	7BGP	SP-GR		A..	1.15949+-9.87019E-03 @ 25/4
493 4		67015	7RLC	ACID		A..	.178796+-3.64108E-02 NACID
494 6		33993	3DAO	GAMMA SCAN		C..	** See Index 501 thru 502. **
495 6		13382	3	SR-89		C..	WRONG METHOD #
496 6		13383	3	SR-90		C..	WRONG METHOD #
497 6		7961	7CBG	SPEC CHEM		C..	Prep Completed 071693 08:31
498 4		7100	7SDN	METALS-ICP		C..	See Individual Elements Below
499 4		7101	7SDN	ALUMINUM		A..	.957883+-3.89973E-02 MOLAR
500 1		67920	7BGP	URANIUM		A..	3.19202E-03+-7.88716E-04 G/L
501 6		33993	3DAO	CS-134		A..	33900+-1520 D/S/ML
502 6		33993	3DAO	CS-137		A..	577000+-23000 D/S/ML
503 1		23381	3KLJ	TOTAL SR		A..	1.02623+-.149421 UCI/ML
504 1		3993	3	GAMMA SCAN		C..	ALREADY DONE

930712-12	WM-102:						13120-200-001931128 02:58 SPLMGT SPLMGT
243 1		47981	7BET	SP-GR		A..	1.1375+-7.7654E-04 @ 25/4
244 2		47981	7BET	SP-GR		A..	1.13002+-7.76495E-04 @ 25/4
245 2		67015	7MLE	ACID		A..	.150271+-3.58967E-02 NACID
246 4		7972	7KFM	UDS		A..	NO VISIBLE SOLIDS
247 2		57171	7WDT	CHLORIDE		A..	30.9963+-7.53523 UG/ML
248 3		77074	7KFM	NITRATE		A..	3.42386+-4.99568E-02 Molar
249 2		67093	7MLE	FLUORIDE		A..	98.1242+-6.54162 UG/ML
250 3		77168	7KFM	SULFATE		A..	1.57332E-03+-9.69884E-05 Molar

Log Idx	# Lab ID	Request Name	Log Type Meth #	Lab	Analyst	Analyte	ARL	Result
251	5		7961	7KFM	RADIO CHEM		C..	Prep Completed 071693 23:06
252	5		33993	3DAO	GAMMA SCAN		C..	** See Index 308 thru 310. **
253	5		33381	3KLJ	TOTAL SR		A..	<< 1.17428+-1.17347 UCI/ML
254	PLASTIC 1		7100	7SDN	METALS-ICP		C..	See Individual Elements Below
255	PLASTIC 1		7101	7SDN	ALUMINUM		C..	> .190546 MOLAR
256	PLASTIC 1		7102	7SDN	BORON		A..	< 3.75619E-03 MOLAR
257	PLASTIC 1		7105	7SDN	IRON		A..	3.36632E-02+-7.75552E-04 MOLAR
258	PLASTIC 1		7110	7SDN	ZIRCONIUM		A..	< 1.56506E-03 MOLAR
259	PLASTIC 1		7111	7SDN	CALCIUM		A..	< 2.54008E-03 MOLAR
260	PLASTIC 1		7900	7SDN	EPA-TOX		C..	See Individual Elements Below
261	PLASTIC 1		7903	7SDN	CADMIUM		A..	28.4015+-1.8716 mg/L
262	PLASTIC 2		7900	7SDN	EPA-TOX		C..	See Individual Elements Below
263	PLASTIC 2		7903	7SDN	CADMIUM		A..	27.4401+-1.83477 mg/L
264	PLASTIC 1		2110	2JSL	SODIUM		A..	=1.2E-02 Molarity
265	PLASTIC 1		2190	2JSL	POTASSIUM		A..	=9.3E-03 Molarity
266	PLASTIC 1		7961	7KFM	SP CHEM M		C..	Prep Completed 071693 23:06
305	PLASTIC 1		7100	7SDN	METALS-ICP		C..	See Individual Elements Below
306	PLASTIC 1		7101	7SDN	ALUMINUM		A..	.912501+-3.90068E-02 MOLAR
307	1		7961	7CBG	SPEC CHEM		C..	Prep Completed 071693 08:32
308	5		33993	3DAO	RU-106		A..	11900+-4280 D/S/ML
309	5		33993	3DAO	CS-134		A..	35800+-1750 D/S/ML
310	5		33993	3DAO	CS-137		A..	633000+-23400 D/S/ML
313	5		23381	3KLJ	TOTAL SR		A..	41826.1+-1479.44 D/S/ML

********** END **********

CPP-601 Deep Tanks – VES-WG-100, VES-WG-101, VES-WH-100, & VES-WH-101

Metals, Anions, and Miscellaneous

Analyte	Units	Method Number	Sample Log # 9811091		Sample Log # 9901192		Sample Log # 9902162		Sample Log # 9904133	
			Results	LQF	Results	LQF	Results	LQF	Results	LQF
pH		EPA150.1	0.88		0.71	B	0.6	B	0.7	B
Acidity	N	AC7012								
Aluminum	µg/L	SW6010B	1.02E+05		6.09E+04	E	5.39E+04		1.81E+05	
Antimony	µg/L	SW6010B			1.04E+02	B	4.00E+01	B N	5.52E+01	B
Arsenic	µg/L	SW6010B	1.66E+01	U	2.52E+01	U	2.37E+01	U	2.37E+01	U
Barium	µg/L	SW6010B	1.09E+02		1.32E+02		1.34E+02		1.23E+02	
Beryllium	µg/L	SW6010B	< 1E00		2.3E00		2.3E00		2.7E00	
Boron	µg/L	SW6010B								
Cadmium	µg/L	SW6010B	7.34E+02		1.48E+02		1.02E+02		3.85E+02	
Calcium	µg/L	SW6010B								
Chloride	µg/L	AC7171	1.06E+05				1.26E+05	B	8.37E+04	
Chromium	µg/L	SW6010B	1.89E+03		8.60E+02		1.94E+03		1.04E+03	
Cobalt	µg/L	SW6010B								
Copper	µg/L	SW6010B								
Fluoride	µg/L	AC7093	4.63E+04	B	2.55E+04	U	2.60E+04		2.69E+04	B
Iron	µg/L	SW6010B								
Lead	µg/L	SW6010B	9.48E+02		8.15E+02		3.35E+02		3.79E+02	
Manganese	µg/L	SW6010B								
Mercury	µg/L	SW7470A	2.69E+03		1.44E+03		2.06E+03	N	5.62E+03	
Nickel	µg/L	SW6010B	8.52E+02		3.64E+02		8.17E+02		7.48E+02	
Nitrate	µg/L	AC7074								
Phosphorus	µg/L	SW6010B								
Potassium	µg/L	SW6010B								
Selenium	µg/L	SW6010B	2.00E+01		1.66E+01	U	2.67E+01	U	2.67E+01	U
Silver	µg/L	SW6010B	5.42E+01		6.4E00	U	2.14E+01	B	2.76E+01	B
Sodium	µg/L	SW6010B								
Sulfur	µg/L	SW6010B								
Thallium	µg/L	SW6010B			2.34E+01	U	2.84E+01	U	2.84E+01	U
Uranium	µg/L	AC7920	4.97E+02				3.09E+02		1.89E+02	U
Vanadium	µg/L	SW6010B			8.4E00	B	1.07E+01	B	1.42E+01	B
Zinc	µg/L	SW6010B			4.62E+03		2.20E+03		1.04E+03	
Zirconium	µg/L	SW6010B								
UDS	µg/L	AC7972	1.00E+05		3.00E+05		4.04E+04	B	4.57E+04	
TIC	µg/L	AC8060					4.66E+04	U	1.16E+04	U
TOC	µg/L	SW9060	2.36E+05	B	1.25E+05		8.76E+04	B	1.36E+05	

CPP-601 Deep Tanks – VES-WG-100, VES-WG-101, VES-WH-100, & VES-WH-101 (con't.)

Metals, Anions, and Miscellaneous (con't.)

Analyte	Units	Method Number	Sample Log # 9904211		Sample Log # 9906101		Sample Log # 9907081		Sample Log # 9908101	
			Results	LQF	Results	LQF	Results	LQF	Results	LQF
pH		EPA150.1	0.7	U						
Acidity	N	AC7012			3.0E00	N	3.5E-01	B	2.87E-01	B
Aluminum	µg/L	SW6010B	5.08E+05		8.74E+04		6.06E+04		2.02E+05	
Antimony	µg/L	SW6010B	9.28E+01	B	4.90E+01	B	1.49E+01	B	6.34E+01	B
Arsenic	µg/L	SW6010B	2.37E+01	B	1.48E+01	U	2.18E+01	B	5.96E+01	B
Barium	µg/L	SW6010B	7.00E+01		9.92E+01		9.65E+01		7.04E+01	
Beryllium	µg/L	SW6010B	4.2E00		4.9E00		1.1E00		2.8E00	
Boron	µg/L	SW6010B								
Cadmium	µg/L	SW6010B	2.96E+02		1.16E+02		1.86E+02		1.94E+02	
Calcium	µg/L	SW6010B								
Chloride	µg/L	AC7171								
Chromium	µg/L	SW6010B	6.75E+02	N	1.28E+03		5.72E+02		5.71E+02	
Cobalt	µg/L	SW6010B	3.55E+01				4.18E+01		6.55E+01	
Copper	µg/L	SW6010B	4.62E+02				1.07E+03		8.04E+02	
Fluoride	µg/L	AC7093	2.56E+04	U	1.32E+04	B	1.87E+04	B	1.82E+04	B
Iron	µg/L	SW6010B								
Lead	µg/L	SW6010B	4.90E+02		3.03E+02		2.67E+02		4.42E+02	
Manganese	µg/L	SW6010B	1.53E+03				6.72E+02		1.10E+03	
Mercury	µg/L	SW7470A	6.97E+03		2.73E+03		1.22E+03		4.33E+03	E
Nickel	µg/L	SW6010B	4.09E+02	N	5.39E+02	E	3.66E+02		4.72E+02	
Nitrate	µg/L	AC7074								
Phosphorus	µg/L	SW6010B								
Potassium	µg/L	SW6010B								
Selenium	µg/L	SW6010B	2.17E+01	U	2.17E+01	U	2.17E+01	U	2.17E+01	U
Silver	µg/L	SW6010B	3.23E+01	B	1.24E+02	N	2.29E+01	B	1.76E+01	B
Sodium	µg/L	SW6010B								
Sulfur	µg/L	SW6010B								
Thallium	µg/L	SW6010B	2.24E+01	U	2.24E+01	U	2.24E+01	U	2.24E+01	U
Uranium	µg/L	AC7920	1.89E+02	U					1.94E+02	
Vanadium	µg/L	SW6010B	6.6E00	B	1.33E+01	B	7.6E00	B	4.3E00	B
Zinc	µg/L	SW6010B	1.48E+03		1.62E+03		9.48E+02		1.67E+03	
Zirconium	µg/L	SW6010B								
UDS	µg/L	AC7972							2.7E+03	U E
TIC	µg/L	AC8060	2.23E+04	U					1.80E+04	U
TOC	µg/L	SW9060	9.88E+04	B					1.50E+05	

CPP-601 Deep Tanks – VES-WG-100, VES-WG-101, VES-WH-100, & VES-WH-101 (con't.)

Metals, Anions, and Miscellaneous (con't.)

Analyte	Units	Method Number	Sample Log # 9911011		Sample Log # 9911224		Sample Log # 9911301		Sample Log # 9912131	
			Results	LQF	Results	LQF	Results	LQF	Results	LQF
pH		EPA150.1								
Acidity	N	AC7012	5.1E-01	U	5.0E-01	B	3.0E-01	B	5.0E-01	B
Aluminum	µg/L	SW6010B	6.19E+04		2.21E+04		2.06E+05		2.34E+04	
Antimony	µg/L	SW6010B	6.34E+01		3.9E00	U	2.05E+01	B N	2.04E+01	B N
Arsenic	µg/L	SW6010B	5.34E+01		3.9E00	U	4.2E00	U	1.28E+01	B
Barium	µg/L	SW6010B	1.32E+02		4.10E+02		2.19E+02		9.01E+01	
Beryllium	µg/L	SW6010B	2.41E+01		4.3E00		3.1E00		9.0E00	B
Boron	µg/L	SW6010B								
Cadmium	µg/L	SW6010B	9.46E+01		6.56E+01		9.01E+01		4.01E+01	
Calcium	µg/L	SW6010B								
Chloride	µg/L	AC7171								
Chromium	µg/L	SW6010B	8.22E+02		9.62E+02		5.14E+02		5.55E+02	
Cobalt	µg/L	SW6010B	7.74E+01		5.19E+01		3.71E+01		3.53E+01	
Copper	µg/L	SW6010B	8.59E+02	N	1.12E+03		3.96E+02		5.34E+02	
Fluoride	µg/L	AC7093	1.98E+04	B	1.68E+04	B	2.17E+04	B	1.56E+04	B
Iron	µg/L	SW6010B								
Lead	µg/L	SW6010B	2.76E+03		6.82E+02		1.99E+02		9.83E+02	
Manganese	µg/L	SW6010B	8.33E+02		3.76E+02		8.99E+02		3.75E+02	
Mercury	µg/L	SW7470A	1.34E+03		7.08E+02		1.70E+03		5.57E+02	
Nickel	µg/L	SW6010B	5.29E+02		5.90E+02		3.62E+02		3.54E+02	
Nitrate	µg/L	AC7074								
Phosphorus	µg/L	SW6010B								
Potassium	µg/L	SW6010B								
Selenium	µg/L	SW6010B	1.23E+01	B	3.7E00	U	3.2E00	U	7.0E00	B
Silver	µg/L	SW6010B	6.61E+01	N	4.11E+02		2.40E+01		1.61E+01	B
Sodium	µg/L	SW6010B								
Sulfur	µg/L	SW6010B								
Thallium	µg/L	SW6010B	2.39E+01	B	4.5E00	U	6.8E00	B	4.6E00	U
Uranium	µg/L	AC7920	4.05E+02		2.03E+02		1.70E+02		2.94E+02	
Vanadium	µg/L	SW6010B	2.34E+01	B	9.6E00	B	2.1E00	U	1.23E+01	B
Zinc	µg/L	SW6010B	1.59E+03	E	6.79E+02		9.42E+02		6.56E+02	
Zirconium	µg/L	SW6010B								
UDS	µg/L	AC7972								
TIC	µg/L	AC8060	4.79E+03	B	3.5E+03	U	2.76E+04	U	1.38E+04	U
TOC	µg/L	SW9060	1.14E+05		4.34E+04		1.87E+05		6.64E+04	

CPP-601 Deep Tanks – VES-WG-100, VES-WG-101, VES-WH-100, & VES-WH-101 (con't.)

Metals, Anions, and Miscellaneous (con't.)

Analyte	Units	Method Number	Sample Log # 0001102		Sample Log # 0001172		Sample Log # 0002142		Sample Log # 0003202	
			Results	LQF	Results	LQF	Results	LQF	Results	LQF
pH		EPA150.1								
Acidity	N	AC7012	6.0E-01		3.0E-01	B	7.0E-01		4.0E-01	B
Aluminum	µg/L	SW6010B	2.28E+04		6.64E+04		4.83E+04		1.41E+05	
Antimony	µg/L	SW6010B	1.79E+01	B	2.58E+01	B	1.17E+01	B N	1.91E+01	B N
Arsenic	µg/L	SW6010B	1.28E+01	B	4.6E00	B	5.8E00	B	5.8E00	B
Barium	µg/L	SW6010B	2.23E+02	E	1.03E+02	E	2.65E+02		6.85E+02	
Beryllium	µg/L	SW6010B	7.8E00		3.4E00		9.1E00		2.8E00	
Boron	µg/L	SW6010B								
Cadmium	µg/L	SW6010B	4.66E+01		4.15E+01		4.20E+01		1.97E+02	
Calcium	µg/L	SW6010B								
Chloride	µg/L	AC7171								
Chromium	µg/L	SW6010B	7.03E+02	N	4.31E+02		8.75E+02		1.01E+03	
Cobalt	µg/L	SW6010B	4.28E+01		1.81E+02		8.89E+01		7.33E+01	
Copper	µg/L	SW6010B	6.88E+02	N	2.90E+02		4.31E+02		1.13E+03	
Fluoride	µg/L	AC7093	1.53E+04	B	1.52E+04		1.74E+04	B	2.85E+04	B
Iron	µg/L	SW6010B								
Lead	µg/L	SW6010B	8.65E+02		1.34E+02		6.52E+02		6.30E+02	
Manganese	µg/L	SW6010B	3.71E+02		4.19E+02		5.68E+02		1.62E+03	
Mercury	µg/L	SW7470A	7.59E+02		9.29E+02		2.51E+02		3.07E+03	E
Nickel	µg/L	SW6010B	4.70E+02	N	2.97E+02		5.81E+02		7.83E+02	
Nitrate	µg/L	AC7074								
Phosphorus	µg/L	SW6010B								
Potassium	µg/L	SW6010B								
Selenium	µg/L	SW6010B	4.5E00	B	3.2E00	U	3.7E00	U	3.7E00	U
Silver	µg/L	SW6010B	4.2E00	B	7.2E00	B	4.01E+01		1.39E+01	
Sodium	µg/L	SW6010B								
Sulfur	µg/L	SW6010B								
Thallium	µg/L	SW6010B	1.16E+01	B	1.10E+01	B	4.5E00	U	4.5E00	U
Uranium	µg/L	AC7920	2.87E+02		1.40E+02	U	1.88E+02		2.10E+02	
Vanadium	µg/L	SW6010B	1.07E+01		5.2E00	B	1.28E+01	B	5.5E00	B
Zinc	µg/L	SW6010B	6.32E+02		6.29E+02	E	1.21E+03		9.42E+03	
Zirconium	µg/L	SW6010B								
UDS	µg/L	AC7972					5.75E+04		1.90E+05	
TIC	µg/L	AC8060	9.40E+03	U	2.81E+04	U	1.41E+04	U	2.81E+04	U E
TOC	µg/L	SW9060	5.39E+04		8.15E+04		9.57E+04		2.65E+05	

CPP-601 Deep Tanks – VES-WG-100, VES-WG-101, VES-WH-100, & VES-WH-101 (con't.)

Volatile Organic Compounds and Semi-volatile Organic Compounds

Analyte	Units	Method Number	Sample Log # 9811091		Sample Log # 9901192		Sample Log # 9902162		Sample Log # 9904133	
			Results	LQF	Results	LQF	Results	LQF	Results	LQF
Semi-Volatile Organic Compounds										
2,4-Dinitrophenol	µg/L	SW8270C	2.5E+01	U	2.5E+01	U	2.5E+01	U	3.2E+01	M
2,4-Dinitrotoluene	µg/L	SW8270C	2.5E+01	U	2.5E+01	U	2.5E+01	U	2.5E+01	U
2,6-Dinitrotoluene	µg/L	SW8270C	2.5E+01	U	2.5E+01	U	2.5E+01	U	2.5E+01	U
4-Nitrophenol	µg/L	SW8270C	2.5E+01	U	2.5E+01	U	2.5E+01	U	2.5E+01	U
4,6-Dinitro-2-methylphenol	µg/L	SW8270C	2.5E+01	U	2.5E+01	U	2.5E+01	U	2.5E+01	U M
Bis-(2-ethylhexyl) phthalate	µg/L	SW8270C	1.5E+02	D	2.5E+01	U	3.05E+02	D	7.0E+01	
Butylbenzyl phthalate	µg/L	SW8270C	2.5E+01	U	2.5E+01	U	2.5E+01	U	2.5E+01	U
Diethylphthalate	µg/L	SW8270C	2.5E+01	U	2.5E+01	U	2.5E+01	U	2.5E+01	U M
Di-n-octyl phthalate	µg/L	SW8270C	2.5E+01	U	2.5E+01	U	2.5E+01	U	2.5E+01	U
Nitrobenzene	µg/L	SW8270C	2.5E+01	U	2.5E+01	U	2.5E+01	U	2.5E+01	U M
n-Nitrosodimethylamine	µg/L	SW8270C	2.5E+01	U	2.5E+01	U	2.5E+01	U	2.5E+01	U M
Pyridine	µg/L	SW8270C	3E+01		2.5E+01	U	2.5E+01	U	2.5E+01	U
Tri-n-butyl phosphate	µg/L	SW8270C	1.3E+04	D	7.1E+03	D	2.5E+01	U	2.5E+01	U M
Volatile Organic Compounds										
1,1-Dichloroethane	µg/L	SW8260A	2.0E00	U	2.0E00	U	1.0E00	U	1.0E+01	U
1,1,1-Trichloroethane	µg/L	SW8260A	2.0E00	U	2.0E00	U	1.0E00	U	1.0E+01	U
2-Butanone	µg/L	SW8260A	4.0E00	U	4.0E00	U	4.2E00		1.0E+01	U
2-Hexanone	µg/L	SW8260A	3.0E00	U	3.0E00	U	1.0E00	U	1.0E+01	U M
4-Methyl-2-pentanone	µg/L	SW8260A	7.8E00	J	4.0E00	U	1.0E00	U	1.0E+01	U
Acetone	µg/L	SW8260A	1.6E+02		3.9E+01		1.0E+01	U	2.6E+02	E
Benzene	µg/L	SW8260A	2.0E00	U	2.0E00	U	1.0E00	U	1.0E+01	U M
Bromodichloromethane	µg/L	SW8260A	2.0E00	U	2.0E00	U	1.0E00	U	1.0E+01	U
Bromoform	µg/L	SW8260A	3.0E00	U	3.0E00	U	1.0E00	U	1.0E+01	U
Bromomethane	µg/L	SW8260A	2.0E00	U	2.0E00	U	1.0E00	U	1.0E+01	U
Carbon disulfide	µg/L	SW8260A	2.0E00	U	2.0E00	U	1.0E00	U	1.0E+01	U
Carbon tetrachloride	µg/L	SW8260A	2.0E00	U	2.0E00	U	1.3E00	J	1.0E+01	U
Chloroform	µg/L	SW8260A	2.0E00	U	2.0E00	U	1.0E00	U	1.0E+01	U
Chloromethane	µg/L	SW8260A	3.0E00	U	3.0E00	U	2.0E00	U	1.0E+01	U
Dibromochloromethane	µg/L	SW8260A	2.0E00	U	2.0E00	U	1.0E00	U	1.0E+01	U
Dichloromethane	µg/L	SW8260A	2.0E00	U	2.0E00	U	1.0E00	U	1.0E+01	U M
Styrene	µg/L	SW8260A	3.0E00	U	3.0E00	U	1.0E00	U	1.0E+01	U M
Trichlorofluoromethane	µg/L	SW8260A							1.0E+01	U
Tentatively Identified Organic Compounds										
no. Ided / total conc.	µg/L								21 / 1.87E+03	

CPP-601 Deep Tanks – VES-WG-100, VES-WG-101, VES-WH-100, & VES-WH-101 (con't.)

Volatile Organic Compounds and Semi-volatile Organic Compounds (con't.)

Analyte	Units	Method Number	Sample Log # 9904211		Sample Log # 9906101		Sample Log # 9907081		Sample Log # 9908101	
			Results	LQF	Results	LQF	Results	LQF	Results	LQF
Semi-Volatile Organic Compounds										
2,4-Dinitrophenol	µg/L	SW8270C	2E+01	U M	2E+01	U M	2.5E+01	U M	2.5E+01	U M
2,4-Dinitrotoluene	µg/L	SW8270C	2E+01	U	2E+01	U	2.5E+01	U	2.5E+01	U
2,6-Dinitrotoluene	µg/L	SW8270C	2E+01	U	2E+01	U	2.5E+01	U	2.5E+01	U
4-Nitrophenol	µg/L	SW8270C	2E+01	U M	2E+01	U	2.5E+01	U	2.5E+01	U
4,6-Dinitro-2-methylphenol	µg/L	SW8270C	2E+01	U M	2E+01	U M	2.5E+01	U	2.5E+01	U M
Bis-(2-ethylhexyl) phthalate	µg/L	SW8270C	2E+01	U	6.8E+01		5E+02	D	3.0E+02	D
Butylbenzyl phthalate	µg/L	SW8270C	2E+01	U	2E+01	U	2.5E+01	U	2.5E+01	U
Diethylphthalate	µg/L	SW8270C	2E+01	U M	2E+01	U	2.5E+01	U	2.5E+01	U M
Di-n-octyl phthalate	µg/L	SW8270C	2E+01	U	2E+01	U	2.5E+01	U	2.5E+01	U
Nitrobenzene	µg/L	SW8270C	2E+01	U M	2E+01	U M	2.5E+01	U M	2.5E+01	U M
n-Nitrosodimethylamine	µg/L	SW8270C	2E+01	U	2E+01	U	2.5E+01	U M	2.5E+01	U
Pyridine	µg/L	SW8270C	2E+01	U	2E+01	U	2.5E+01	U	1.6E+03	D
Tri-n-butyl phosphate	µg/L	SW8270C	1.5E+02	M	2E+01	U	9.6E+03	D	1.4E+04	D M
Volatile Organic Compounds										
1,1-Dichloroethane	µg/L	SW8260A	1E+01	U	1E+01	U	1E+01	U M	1E+01	U
1,1,1-Trichloroethane	µg/L	SW8260A	1E+01	U	1E+01	U	1E+01	U	1E+01	U
2-Butanone	µg/L	SW8260A	1E+01	U	1E+01	U	1E+01	U	1E+01	U
2-Hexanone	µg/L	SW8260A	1E+01	U M	1E+01	U M	1E+01	U M	1E+01	U
4-Methyl-2-pentanone	µg/L	SW8260A	1.2E+01		1E+01	U	1E+01	U	1E+01	U
Acetone	µg/L	SW8260A	1E+03	E	1E+01	U M	1E+01	U M	5.5E+02	E
Benzene	µg/L	SW8260A	1E+01	U M	1E+01	U M	1E+01	U M	1E+01	U M
Bromodichloromethane	µg/L	SW8260A	1E+01	U	1E+01	U	1E+01	U	1E+01	U
Bromoform	µg/L	SW8260A	1E+01	U	1E+01	U M	1E+01	U	1E+01	U
Bromomethane	µg/L	SW8260A	1E+01	U	4E00	J B M	2E00	J B M	3E00	J B M
Carbon disulfide	µg/L	SW8260A	1E+01	U	1E+01	U	1E+01	U	1E+01	U
Carbon tetrachloride	µg/L	SW8260A	1E+01	U	1E+01	U	1E+01	U	1E+01	U
Chloroform	µg/L	SW8260A	1E+01	U	1E+01	U	1E+01	U	1E+01	U
Chloromethane	µg/L	SW8260A	1E+01	U	1E+01	U Z	1E+01	U	1E+01	U
Dibromochloromethane	µg/L	SW8260A	1E+01	U	1E+01	U	1E+01	U	1E+01	U
Dichloromethane	µg/L	SW8260A	1E+01	U M	1E+01	U	1E+01	U M	1E+01	U
Styrene	µg/L	SW8260A	1E+01	U M	1E+01	U	1E+01	U M	1E+01	U M
Trichlorofluoromethane	µg/L	SW8260A	1E+01	U	1E+01	U	1E+01	U	1E+01	U
Tentatively Identified Organic Compounds										
no. Ided / total conc.	µg/L		9 / 3.28E+02		15 / 8.13E+02		22 / 1.47E+03		7 / 6.26E+02	

CPP-601 Deep Tanks – VES-WG-100, VES-WG-101, VES-WH-100, & VES-WH-101 (con't.)

Volatile Organic Compounds and Semi-volatile Organic Compounds (con't.)

Analyte	Units	Method Number	Sample Log # 9911011		Sample Log # 9911224		Sample Log # 9911301		Sample Log # 9912131	
			Results	LQF	Results	LQF	Results	LQF	Results	LQF
Semi-Volatile Organic Compounds										
2,4-Dinitrophenol	µg/L	SW8270C	4E+01	U M	4E+01	U M	4E+01	U M	6E+01	U M
2,4-Dinitrotoluene	µg/L	SW8270C	4E+01	U	2E+01	U	2E+01	U	2E+01	U
2,6-Dinitrotoluene	µg/L	SW8270C	4E+01	U	2E+01	U	2E+01	U	2E+01	U
4-Nitrophenol	µg/L	SW8270C	4E+01	U M	4E+01	U	4E+01	U	6E+01	U
4,6-Dinitro-2-methylphenol	µg/L	SW8270C	4E+01	U	4E+01	U M	4E+01	U M	6E+01	U
Bis-(2-ethylhexyl) phthalate	µg/L	SW8270C	4.9E+01	M	1.2E+02		5E+01		2E+01	U
Butylbenzyl phthalate	µg/L	SW8270C	2.9E+01	J M	2E+01	U	2.4E+01		2E+01	U
Diethylphthalate	µg/L	SW8270C	4E+01	U	2E+01	U M	2E+01	U M	2E+01	U M
Di-n-octyl phthalate	µg/L	SW8270C	4E+01	U M	2E+01	U	2E+01	U	2E+01	U
Nitrobenzene	µg/L	SW8270C	4E+01	U	2E+01	U	2E+01	U	2E+01	U M
n-Nitrosodimethylamine	µg/L	SW8270C	4E+01	U	2E+01	U	2E+01	U	2E+01	U M
Pyridine	µg/L	SW8270C	4E+01	U	2E+01	U	1.3E+02		2E+01	U
Tri-n-butyl phosphate	µg/L	SW8270C	8.8E+01	D	2E+01	U M	2E+01	U M	6E+01	U M
Volatile Organic Compounds										
1,1-Dichloroethane	µg/L	SW8260A	1E+01	U	1.0E00	U	1.0E00	U	1E+01	U
1,1,1-Trichloroethane	µg/L	SW8260A	1E+01	U	1.0E00	U	1.0E00	U	1E+01	U
2-Butanone	µg/L	SW8260A	1E+01	U	2.0E00	U	2.0E00	U	1E+01	U M
2-Hexanone	µg/L	SW8260A	1E+01	U	2.0E00	U	2.0E00	U	1E+01	U M
4-Methyl-2-pentanone	µg/L	SW8260A	1E+01	U	2.0E00	U	2.0E00	U	1E+01	U M
Acetone	µg/L	SW8260A	2.6E+02	E	1.3E+02	B	2.2E00	B J M	8.48E+02	E M
Benzene	µg/L	SW8260A	4E00	J B M	1.0E00	U M	1.0E00	U	1E+01	U M
Bromodichloromethane	µg/L	SW8260A	1E+01	U	1.0E00	U	1.0E00	U	1E+01	U
Bromoform	µg/L	SW8260A	1E+01	U	2.0E00	U	2.0E00	U	1E+01	U
Bromomethane	µg/L	SW8260A	1E+01	U	2.0E00	U	2.0E00	U	1E+01	U
Carbon disulfide	µg/L	SW8260A	1E+01	U	1.0E00	U	1.0E00	U	1E+01	U
Carbon tetrachloride	µg/L	SW8260A	1E+01	U	2.0E00	U	2.0E00	U	1E+01	U
Chloroform	µg/L	SW8260A	1E+01	U	1.0E00	U	1.0E00	U Z	1E+01	U
Chloromethane	µg/L	SW8260A	1E+01	U	2.0E00	U	2.0E00	U	1E+01	U M
Dibromochloromethane	µg/L	SW8260A	1E+01	U	1.0E00	U	1.0E00	U	1E+01	U
Dichloromethane	µg/L	SW8260A	1E+01	U M	1.0E00	U M	1.0E00	U M	1E+01	U M
Styrene	µg/L	SW8260A	1E+01	U M	1.0E00	U M	1.0E00	U M	1E+01	U
Trichlorofluoromethane	µg/L	SW8260A	1E+01	U	1.0E00	U	1.0E00	U	1E+01	U
Tentatively Identified Organic Compounds										
no. Ided / total conc.	µg/L		21 / 2.36E+03		27 / 1.37E+04		17 / 9.18E+02		8 / 1.20E+02	

CPP-601 Deep Tanks – VES-WG-100, VES-WG-101, VES-WH-100, & VES-WH-101 (con't.)

Volatile Organic Compounds and Semi-volatile Organic Compounds (con't.)

Analyte	Units	Method Number	Sample Log # 0001102		Sample Log # 0001172		Sample Log # 0002142		Sample Log # 0003202	
			Results	LQF	Results	LQF	Results	LQF	Results	LQF
Semi-Volatile Organic Compounds										
2,4-Dinitrophenol	µg/L	SW8270C	4E+01	U M	4E+01	U M	4E+01	U M	3.6E+01	J M Z
2,4-Dinitrotoluene	µg/L	SW8270C	4E+01	U	4E+01	U	4E+01	U	4E+01	U Z
2,6-Dinitrotoluene	µg/L	SW8270C	4E+01	U	4E+01	U	4E+01	U	4E+01	U Z
4-Nitrophenol	µg/L	SW8270C	4E+01	U	4E+01	U	4E+01	U M	4E+01	U M Z
4,6-Dinitro-2-methylphenol	µg/L	SW8270C	4E+01	U M	4E+01	U M	4E+01	U M	4E+01	U M Z
Bis-(2-ethylhexyl) phthalate	µg/L	SW8270C	3.2E+01	J	5.6E+01		2.9E+01	J M	4.4E+01	M Z
Butylbenzyl phthalate	µg/L	SW8270C	7E00	J	1.5E+01	J	4E+01	U	4.1E+02	D Z
Diethylphthalate	µg/L	SW8270C	4E00	J	3E00	J	4E+01	U	8E00	J Z
Di-n-octyl phthalate	µg/L	SW8270C	4E+01	U	4E+01	U	4E+01	U M	4E+01	U M Z
Nitrobenzene	µg/L	SW8270C	4E+01	U	4E+01	U	4E+01	U	4E+01	U Z
n-Nitrosodimethylamine	µg/L	SW8270C	4E+01	U	4E+01	U	4E+01	U	4E+01	U Z
Pyridine	µg/L	SW8270C	4E+01	U	4E+01	U	4E+01	U	7.2E+02	D Z
Tri-n-butyl phosphate	µg/L	SW8270C	8.5E+02	D	8.7E+02	D	1.4E+02		1.4E+03	E D Z
Volatile Organic Compounds										
1,1-Dichloroethane	µg/L	SW8260A	1E00	U	1E00	U	1E+01	U	1E+01	U
1,1,1-Trichloroethane	µg/L	SW8260A	1E00	U	1E00	U	1E+01	U	1E+01	U
2-Butanone	µg/L	SW8260A	2E00	U M	2E00	U M	1E+01	U M	1E+01	U M
2-Hexanone	µg/L	SW8260A	2E00	U M	2E00	U M	1E+01	U M	1E+01	U M
4-Methyl-2-pentanone	µg/L	SW8260A	2E00	U M	7E00	J M	1E+01	U	1E+01	U
Acetone	µg/L	SW8260A	1.6E+02	B M	2.5E+02	E M	1E+01	U B M	3.8E+02	E B M
Benzene	µg/L	SW8260A	1E00	U M	1E00	U M	1E+01	U M	1E+01	U M
Bromodichloromethane	µg/L	SW8260A	1E00	U	1E00	U	1E+01	U	1E+01	U
Bromoform	µg/L	SW8260A	2E00	U	2E00	U	1E+01	U	1E+01	U
Bromomethane	µg/L	SW8260A	2E00	U	2E00	U	1E+01	U	1E+01	U M
Carbon disulfide	µg/L	SW8260A	1E00	U	1E00	U	1E+01	U	1E+01	U
Carbon tetrachloride	µg/L	SW8260A	2E00	U	2E00	U	1E+01	U	1E+01	U
Chloroform	µg/L	SW8260A	1E00	U	1E00	U	1E+01	U	1E+01	U
Chloromethane	µg/L	SW8260A	2E00	U M	2E00	U M	1E+01	U	1E+01	U M
Dibromochloromethane	µg/L	SW8260A	1E00	U	1E00	U	1E+01	U	1E+01	U
Dichloromethane	µg/L	SW8260A	1E00	U M	1E00	U M	2E00	J B M	1E+01	U M
Styrene	µg/L	SW8260A	1E00	U M	1E00	U M	1E+01	U M	1E+01	U M
Trichlorofluoromethane	µg/L	SW8260A	1E00	U	1E00	U	1E+01	U	1E+01	U
Tentatively Identified Organic Compounds										
no. Ided / total conc.	µg/L		14 / 5.88E+02		22 / 6.54E+02		19 / 1.35E+03		21 / 8.09E+03	

PEWE Condensate Tanks – WL-106, WL-107, & WL-163

Metals, Anions, and Miscellaneous

Analyte	Units	Method Number	Sample Log # 9903241		Sample Log # 9903271		Sample Log # 9904281		Sample Log # 9911151	
			Results	LQF	Results	LQF	Results	LQF	Results	LQF
pH		EPA150.1	1.43	B	1.43	B	0.75	B		
Acidity	N	AC7012							4.4E-01	
Aluminum	µg/L	SW6010B	2.41E+04		2.53E+04		3.67E+04		3.86E+04	
Antimony	µg/L	SW6010B	2.2E+01	U	2.2E+01	U	1.4E+01	U	4.2E00	U
Arsenic	µg/L	SW6010B	2.37E+01	U	2.37E+01	U	1.48E+01		4.2E00	U
Barium	µg/L	SW6010B	1.3E00	U	1.5E00	B	4.1E00	B	1.47E+01	
Beryllium	µg/L	SW6010B	2.0E-01	U	2.0E-01	U	1.0E-01	B	2.0E-01	B
Boron	µg/L	SW6010B								
Cadmium	µg/L	SW6010B	2.1E00	U	2.1E00	U	1.3E00	U	5.0E-01	U
Calcium	µg/L	SW6010B								
Chloride	µg/L	AC7171								
Chromium	µg/L	SW6010B	2.62E+01		2.15E+01	B	3E00	U	5.70E+01	
Cobalt	µg/L	SW6010B	2.2E00	U	2.2E00	U	2.7E00	U		
Copper	µg/L	SW6010B	4.4E00	U	6.4E00	B	7.7E00	B	5.17E+01	
Fluoride	µg/L	AC7093	1.73E+03		1.24E+03	B	2.55E+04	U	7.37E+03	
Iron	µg/L	SW6010B								
Lead	µg/L	SW6010B	2.02E+01	U	2.02E+01	U	1.97E+01	U	4.3E00	U
Manganese	µg/L	SW6010B	5.1E00		5.5E00		4.3E00	B	7.6E00	
Mercury	µg/L	SW7470A	3.69E+01		2.98E+03	N	1.14E+03		5.25E+03	E
Nickel	µg/L	SW6010B	2.00E+01	B	1.76E+01	B	4.6E00	B	3.57E+01	
Nitrate	µg/L	AC7074								
Phosphorus	µg/L	SW6010B								
Potassium	µg/L	SW6010B								
Selenium	µg/L	SW6010B	2.67E+01	U	2.67E+01	U	2.17E+01	U	3.2E00	U
Silver	µg/L	SW6010B	6.2E00	U	6.2E00	U	3.5E00	U	1.7E00	U
Sodium	µg/L	SW6010B								
Sulfur	µg/L	SW6010B								
Thallium	µg/L	SW6010B	2.84E+01	U	2.84E+01	U	2.24E+01	U	4.6E00	U
Uranium	µg/L	AC7920			1.88E+02	U	1.90E+02	U	1.38E+02	U
Vanadium	µg/L	SW6010B	3.6E00	U	3.6E00	U	4.3E00	U	2.1E00	U
Zinc	µg/L	SW6010B	1.01E+02		2.60E+02		5.12E+01		1.94E+02	N
Zirconium	µg/L	SW6010B								
UDS	µg/L	AC7972								
TIC	µg/L	AC8060			2.33E+03	U	4.7E+03	U	3.45E+03	U
TOC	µg/L	SW9060			3.12E+04		5.22E+04		2.77E+04	

PEWE Condensate Tanks – WL-106, WL-107, & WL-163 (con't.)

Metals, Anions, and Miscellaneous (con't.)

Analyte	Units	Method Number	Sample Log # 0003073		Sample Log # 0011142		Sample Log # 0102218		Sample Log # 0106011	
			Results	LQF	Results	LQF	Results	LQF	Results	LQF
pH		EPA150.1								
Acidity	N	AC7012	2.2E-01		1.9E-01	B	6E-01		5.41E-01	
Aluminum	µg/L	SW6010B	2.55E+04		4.49E+04		2.41E+04		3.55E+04	
Antimony	µg/L	SW6010B	3.9E00	U	6.7E00	U	2.7E00	U	4.9E00	B
Arsenic	µg/L	SW6010B	3.9E00	U	4E00	U	4.5E00	U	2.9E00	U
Barium	µg/L	SW6010B	1.30E+01		1.3E00	B	2.8E00	B	2.79E+01	
Beryllium	µg/L	SW6010B	1.0E-01	B	3E-01	B	2E-01	B	3E-01	B
Boron	µg/L	SW6010B								
Cadmium	µg/L	SW6010B	7.0E-01	B	5E-01	U	3E-01	B	4E-01	U
Calcium	µg/L	SW6010B								
Chloride	µg/L	AC7171								
Chromium	µg/L	SW6010B	2.21E+01		1.25E+01		5.61E+01		4.37E+01	
Cobalt	µg/L	SW6010B			1.2E00	U	9E-01	B	1.1E00	B
Copper	µg/L	SW6010B	3.4E00	B	1.47E+01		1.96E+02		1.97E+01	
Fluoride	µg/L	AC7093	4.27E+03		5.7E+03		1.14E+05	U N	3.65E+04	U
Iron	µg/L	SW6010B								
Lead	µg/L	SW6010B	5E00	U	4.7E00	U	3.9E00	U	6.3E00	U
Manganese	µg/L	SW6010B	3.1E00		2.1E00		8E00		5.4E00	
Mercury	µg/L	SW7470A	6.52E+02		3.37E+04		4.41E+04		3.66E+04	
Nickel	µg/L	SW6010B	1.26E+01	B	8.2E00	B	3.36E+01		3.13E+01	
Nitrate	µg/L	AC7074								
Phosphorus	µg/L	SW6010B								
Potassium	µg/L	SW6010B								
Selenium	µg/L	SW6010B	3.7E00	U	4.8E00	U	2.9E00	U	4.8E00	U
Silver	µg/L	SW6010B	3.4E00	B	1.5E00	U	1.7E00	U	2E00	U
Sodium	µg/L	SW6010B								
Sulfur	µg/L	SW6010B								
Thallium	µg/L	SW6010B	4.5E00	U	4.2E00	U	3.8E00	U	4E00	U
Uranium	µg/L	AC7920	1.41E+02	U			3.2E+02	U	3.2E+02	U
Vanadium	µg/L	SW6010B	2.6E00	U	2.4E00	U	1.2E00	U	1E00	U
Zinc	µg/L	SW6010B	8.4E00		2.69E+01		2.26E+02		5.91E+01	
Zirconium	µg/L	SW6010B								
UDS	µg/L	AC7972	5.0E+03	U	5E+03	U	5E+03 TSS	U	1.07E+05 TDS	
TIC	µg/L	AC8060	1.41E+04	U	1.07E+04	U E	5.9E+03	U E	1.19E+04	U E
TOC	µg/L	SW9060	3.80E+04		5.92E+04	B	6.9E+04		5.43E+04	B

PEWE Condensate Tanks – WL-106, WL-107, & WL-163 (con't.)

Volatile Organic Compounds and Semi-volatile Organic Compounds

Analyte	Units	Method Number	Sample Log # 9903241		Sample Log # 9903271		Sample Log # 9904281		Sample Log # 9911151	
			Results	LQF	Results	LQF	Results	LQF	Results	LQF
Semi-Volatile Organic Compounds										
2,4-Dinitrophenol	µg/L	SW8270C	3.6E+01	M	2.5E+01	U M	2.2E+01	M	6.6E+01	M
2,4-Dinitrotoluene	µg/L	SW8270C	2.5E+01	U	2.5E+01	U	2E+01	U	2E+01	U
2,6-Dinitrotoluene	µg/L	SW8270C	2.5E+01	U	2.5E+01	U	2E+01	U	2E+01	U
4-Nitrophenol	µg/L	SW8270C	2.5E+01	U	2.5E+01	U	2E+01	U M	4E+01	U
4,6-Dinitro-2-methylphenol	µg/L	SW8270C	2.5E+01	U M	2.5E+01	U M	2E+01	U M	4E+01	U M
Bis-(2-ethylhexyl) phthalate	µg/L	SW8270C	2.5E+01	U	2.5E+01	U	2E+01	U	3.1E+01	
Butylbenzyl phthalate	µg/L	SW8270C	2.5E+01	U	2.5E+01	U	2E+01	U	2E+01	U
Diethylphthalate	µg/L	SW8270C	2.5E+01	U M	2.5E+01	U M	2E+01	U M	2E+01	U M
Di-n-octyl phthalate	µg/L	SW8270C	2.5E+01	U Z	2.5E+01	U Z	2E+01	U	2E+01	U
Nitrobenzene	µg/L	SW8270C	2.5E+01	U M	2.5E+01	U M	2E+01	U M	2E+01	U
n-Nitrosodimethylamine	µg/L	SW8270C	2.5E+01	U M	2.5E+01	U M	2E+01	U	2E+01	U
Pyridine	µg/L	SW8270C	2.5E+01	U	2.5E+01	U	2E+01	U	2E+01	U
Tri-n-butyl phosphate	µg/L	SW8270C	2.5E+01	U M	2.5E+01	U M	2E+03	M	2E+01	U M
Volatile Organic Compounds										
1,1-Dichloroethane	µg/L	SW8260A	1E+01	U	1E+01	U Z	1E+01	U	1E+01	U
1,1,1-Trichloroethane	µg/L	SW8260A	1E+01	U	1E+01	U Z	1E+01	U	1E+01	U
2-Butanone	µg/L	SW8260A	1.2E+01	M	1E+01	U M Z	8E00	J	8E00	J
2-Hexanone	µg/L	SW8260A	1E+01	U M	1E+01	U M	1E+01	U	1E+01	U
4-Methyl-2-pentanone	µg/L	SW8260A	3E00	J	1E+01	U	1E+01	U	1E+01	U
Acetone	µg/L	SW8260A	2E+02	M	1.7E+02	M Z	2E+02	M	1.6E+02	
Benzene	µg/L	SW8260A	1E+01	U	1E+01	U	1E+01	U M	6E00	J M
Bromodichloromethane	µg/L	SW8260A	1.1E+01		1E+01	U	1E+01	U	1E+01	U
Bromoform	µg/L	SW8260A	2E00	J	1E+01	U	1E+01	U	1E+01	U
Bromomethane	µg/L	SW8260A	1E+01	U	3E00	J Z	2.7E+01		1.4E+01	
Carbon disulfide	µg/L	SW8260A	2E00	J	1E+01	U Z	1E+01	U	1E+01	U
Carbon tetrachloride	µg/L	SW8260A	5E00	J	1E+01	U	1E+01	U	1E+01	U
Chloroform	µg/L	SW8260A	2.3E+01		1E+01	U Z	1E+01	U	1E+01	U
Chloromethane	µg/L	SW8260A	1E+01	U	8E00	J Z	7.0E+01		1E+01	U
Dibromochloromethane	µg/L	SW8260A	7E00	J	1E+01	U	1E+01	U	1E+01	U
Dichloromethane	µg/L	SW8260A	1E+01	U	3E00	J Z	1E+01	U	1E+01	U
Styrene	µg/L	SW8260A	1E+01	U	1E+01	U	1E+01	U	1E+01	U
Trichlorofluoromethane	µg/L	SW8260A	1E+01	U	1E+01	U Z	1E+01	U	1E+01	U M
Tentatively Identified Organic Compounds										
no. Ided / total conc.	µg/L		13 / 1.29E+03		18 / 1.56E+03		19 / 5.46E+02		22 / 1.23E+03	

PEWE Condensate Tanks – WL-106, WL-107, & WL-163 (con't.)

Volatile Organic Compounds and Semi-volatile Organic Compounds (con't.)

Analyte	Units	Method Number	Sample Log # 0003073		Sample Log # 0011142		Sample Log # 0102218		Sample Log # 0106011	
			Results	LQF	Results	LQF	Results	LQF	Results	LQF
Semi-Volatile Organic Compounds										
2,4-Dinitrophenol	µg/L	SW8270C	1.3E+01	J	3.3E+01	M	4E+01	U M D	2.8E+01	M
2,4-Dinitrotoluene	µg/L	SW8270C	2E+01	U	2E+01	U	4E+01	U D	2E+01	U
2,6-Dinitrotoluene	µg/L	SW8270C	2E+01	U	2E+01	U	4E+01	U D	2E+01	U
4-Nitrophenol	µg/L	SW8270C	2E+01	U	2E+01	U	4E+01	U D	2E+01	U
4,6-Dinitro-2-methylphenol	µg/L	SW8270C	5E00	J	2E+01	U	4E+01	U M D	2E+01	U M
Bis-(2-ethylhexyl) phthalate	µg/L	SW8270C	3.1E+01		6E00	J	2.2E+01	J D	2.4E+01	
Butylbenzyl phthalate	µg/L	SW8270C	2E+01	U	2E+01	U	4E+01	U D	2E+01	U
Diethylphthalate	µg/L	SW8270C	2E+01	U M	2E+01	U M	4E+01	U M Z D	2E+01	U M
Di-n-octyl phthalate	µg/L	SW8270C	2E+01	U	2E+01	U	4E+01	U D	2E+01	U
Nitrobenzene	µg/L	SW8270C	2E+01	U M	2E+01	U M	4E+01	U D	2E+01	U M
n-Nitrosodimethylamine	µg/L	SW8270C	2E+01	U M	1.5E+02		2E+02	D	4.5E+02	D
Pyridine	µg/L	SW8270C	2E+01	U	2E+01	U	4E+01	U D	2E+01	U
Tri-n-butyl phosphate	µg/L	SW8270C	1.7E+02	E M	6.6E+02	D M	4.4E+02	D E	3.4E+02	D M
Volatile Organic Compounds										
1,1-Dichloroethane	µg/L	SW8260A	1E+01	U	1E+01	U	1E+01	U	1E+01	U
1,1,1-Trichloroethane	µg/L	SW8260A	1E+01	U	1E+01	U	1E+01	U	1E+01	U
2-Butanone	µg/L	SW8260A	5E00	J M	1E+01	U	1E+01	U	5E00	J
2-Hexanone	µg/L	SW8260A	1E+01	U M	1E+01	U	1E+01	U	1E+01	U
4-Methyl-2-pentanone	µg/L	SW8260A	1E+01	U	1E+01	U	1E+01	U	1E+01	U
Acetone	µg/L	SW8260A	1.9E+02	B M	7.2E+01		5.3E+01		8.5E+01	
Benzene	µg/L	SW8260A	1E+01	U M	1E+01	U	1E+01	U	1E+01	U
Bromodichloromethane	µg/L	SW8260A	1E+01	U	1E+01	U	1E+01	U	1E+01	U
Bromoform	µg/L	SW8260A	1E+01	U	1E+01	U	1E+01	U	1E+01	U
Bromomethane	µg/L	SW8260A	1E+01	U	7E00	J	3.8E+01		9E00	J
Carbon disulfide	µg/L	SW8260A	1E+01	U	1E+01	U	1E+01	U	1E+01	U
Carbon tetrachloride	µg/L	SW8260A	1E+01	U	1E+01	U	1E+01	U	1E+01	U
Chloroform	µg/L	SW8260A	1E+01	U	1E+01	U	1E+01	U	1E+01	U
Chloromethane	µg/L	SW8260A	3E00	J	1E+01	U M	5.6E+01	M	2.3E+01	M
Dibromochloromethane	µg/L	SW8260A	1E+01	U	1E+01	U	1E+01	U	1E+01	U
Dichloromethane	µg/L	SW8260A	1E+01	U M	1E+01	U	1E+01	U	1E+01	U
Styrene	µg/L	SW8260A	1E+01	U	1E+01	U	1E+01	U	1E+01	U
Trichlorofluoromethane	µg/L	SW8260A	1E+01	U	1E+01	U	1E+01	U	1E+01	U
Tentatively Identified Organic Compounds										
no. Ided / total conc.	µg/L		24 / 7.18E+03		20 / 4.27E+02		13 / 3.64E+02		20 / 4.74E+02	SVOC only

LET&D Bottoms Tank – WLL-195

Metals, Anions, and Miscellaneous

Analyte	Units	Method Number	Sample Log # 9903272		Sample Log # 9905042		Sample Log # 0003285	
			Results	LQF	Results	LQF	Results	LQF
pH		EPA150.1	0.34	U				
Acidity	N	AC7012			1.21E+01		1.20E+01	
Aluminum	µg/L	SW6010B	1.11E+06		1.72E+06		1.71E+06	
Antimony	µg/L	SW6010B	4.77E+01	B N E	1.66E+02	B	3.9E+01	U
Arsenic	µg/L	SW6010B	3.57E+01	B	2.89E+02	B	3.9E+01	U
Barium	µg/L	SW6010B	2.34E+01		2.45E+02		4.30E+01	B
Beryllium	µg/L	SW6010B	4.6E00		6.6E00	B	1.10E+01	
Boron	µg/L	SW6010B						
Cadmium	µg/L	SW6010B	1.58E+01	B	3.30E+01	B	1.50E+01	B
Calcium	µg/L	SW6010B						
Chloride	µg/L	AC7171						
Chromium	µg/L	SW6010B	3.54E+04		1.77E+05		5.28E+04	
Cobalt	µg/L	SW6010B	3.58E+03		2.13E+04		6.04E+03	
Copper	µg/L	SW6010B	1.86E+03		1.15E+04		2.92E+03	
Fluoride	µg/L	AC7093	9.93E+04	B	6.58E+04	B	2.43E+05	U
Iron	µg/L	SW6010B						
Lead	µg/L	SW6010B	2.02E+01	U	2.17E+02	U	5.0E+01	U
Manganese	µg/L	SW6010B	1.66E+03		6.08E+03		1.87E+03	
Mercury	µg/L	SW7470A	3.83E+04		5.55E+04		3.64E+04	B E
Nickel	µg/L	SW6010B	4.42E+04		2.27E+05		7.0E+04	
Nitrate	µg/L	AC7074						
Phosphorus	µg/L	SW6010B						
Potassium	µg/L	SW6010B						
Selenium	µg/L	SW6010B	2.67E+01	U	2.39E+02	U	3.7E+01	U
Silver	µg/L	SW6010B	6.2E00	U E	3.85E+01	U N	1.70E+01	B
Sodium	µg/L	SW6010B						
Sulfur	µg/L	SW6010B						
Thallium	µg/L	SW6010B	2.84E+01	U	2.79E+02	B	4.5E+01	U
Uranium	µg/L	AC7920	1.89E+02	U	1.89E+02	U	2.77E+01	
Vanadium	µg/L	SW6010B	8.49E+01		2.45E+02	B	2.6E+01	U
Zinc	µg/L	SW6010B	8.80E+02	E	1.37E+03	E	6.96E+02	E
Zirconium	µg/L	SW6010B						
UDS	µg/L	AC7972					2.22E+04	
TIC	µg/L	AC8060	2.46E+03		8.70E+04		1.41E+02	U
TOC	µg/L	SW9060	1.41E+04		4.35E+03	B	7.32E+04	B

LET&D Bottoms Tank – WLL-195 (con't.)

Volatile Organic Compounds and Semi-volatile Organic Compounds

Analyte	Units	Method Number	Sample Log # 9903272		Sample Log # 9905042		Sample Log # 0003285	
			Results	LQF	Results	LQF	Results	LQF
Semi-Volatile Organic Compounds								
2,4-Dinitrophenol	µg/L	SW8270C	2.5E+03	U M D	2E+01	U M	1E+03	U M
2,4-Dinitrotoluene	µg/L	SW8270C	2.5E+03	U D	2E+01	U	1E+03	U
2,6-Dinitrotoluene	µg/L	SW8270C	2.5E+03	U D	2E+01	U	1E+03	U
4-Nitrophenol	µg/L	SW8270C	2.5E+03	UD	2E+01	U M	1E+03	U M
4,6-Dinitro-2-methylphenol	µg/L	SW8270C	2.5E+03	U M D	2E+01	U M	1E+03	U M
Bis-(2-ethylhexyl) phthalate	µg/L	SW8270C	2.5E+03	UD	2E+01	U	1E+03	U
Butylbenzyl phthalate	µg/L	SW8270C	2.5E+03	UD	2E+01	U	1E+03	U
Diethylphthalate	µg/L	SW8270C	2.5E+03	U M D	2E+01	U M	1E+03	U
Di-n-octyl phthalate	µg/L	SW8270C	2.5E+03	UD	2E+01	U	1E+03	U
Nitrobenzene	µg/L	SW8270C	2.5E+03	U M D	2E+01	U M	1E+03	U
n-Nitrosodimethylamine	µg/L	SW8270C	2.5E+03	U M D	2E+01	U	1E+03	U
Pyridine	µg/L	SW8270C	2.5E+03	UD	2E+01	U	1E+03	U
Tri-n-butyl phosphate	µg/L	SW8270C	2.5E+03	U M D	2.9E+01	M	1E+03	U M D
Volatile Organic Compounds								
1,1-Dichloroethane	µg/L	SW8260A			1E+01	U Y	1.5E+02	U
1,1,1-Trichloroethane	µg/L	SW8260A			1E+01	U Y	1.5E+02	U
2-Butanone	µg/L	SW8260A			1E+01	U Y	1.5E+02	U M
2-Hexanone	µg/L	SW8260A			1E+01	U Y	1.5E+02	U M
4-Methyl-2-pentanone	µg/L	SW8260A			1E+01	U	1.5E+02	U M
Acetone	µg/L	SW8260A			1E+01	U M Y	9.8E+02	B M
Benzene	µg/L	SW8260A			1E+01	U M	1.5E+02	U M
Bromodichloromethane	µg/L	SW8260A			1E+01	U	1.5E+02	U
Bromoform	µg/L	SW8260A			1E+01	U Y	1.5E+02	U
Bromomethane	µg/L	SW8260A			6.3E+02	EY	4.2E+01	J M
Carbon disulfide	µg/L	SW8260A			1E+01	U Y	1.5E+02	U
Carbon tetrachloride	µg/L	SW8260A			1E+01	U Y	1.5E+02	U
Chloroform	µg/L	SW8260A			1E+01	U Y	1.5E+02	U
Chloromethane	µg/L	SW8260A			1E+01	U Y	5.9E+02	
Dibromochloromethane	µg/L	SW8260A			1E+01	U Y	1.5E+02	U
Dichloromethane	µg/L	SW8260A			1E+01	U Y	1.5E+02	U M
Styrene	µg/L	SW8260A			1E+01	U Y	1.5E+02	U M Z
Trichlorofluoromethane	µg/L	SW8260A			6E00	J Y	1E+01	U
Tentatively Identified Organic Compounds								
no. Ided / total conc.	µg/L		12 / 6.93E+05	SVOC only	28 / 1.36E+04		8 / 1.58E+04	

T E M P L A T E R E P O R T for WG:

Log Type: ** PLANT **

Report for : FUEL
Mailstop : 5201 Phone Number : 3244

Date Received : Date completed :
Time Received : Time completed :

GWA charged : 100333S01 Reviewed by

MSA mR/hr : 1 Signature _____

Hazard Index : 1E6 Lab QC/QA reviewed by

Quality Level : NO Signature _____

COMMENTS: SEND COPY OF FINAL REPORT TO DAVE OLSEN, MS 5111

Analysis	Sample	Method	Analyst	Results
AL/F RATIO	WG	1023		
Acid	WG	7012		
Aluminum	WG	7100		
COMPOSITES	WG	7963		
	WG	7963		
Chloride	WG	7171		
Flash Point	WG	7985		
Fluoride	WG	7093		
GROSS BETA	WG	7970		
Mercury	WG	7802		
Nitrate	WG	7074		
Potassium	WG	2118		
Sodium	WG	2118		
Sulfate	WG	7168		
TOC	WG	8060		
TOC(r)	WG	8060		
U234	WG	8920		
U235	WG	8920		
U236	WG	8920		
U238	WG	8920		
URANIUM FOR ACC	WG	8920		
URANIUM.	WG	8920		
Uranium	WG	7920		
	WG	7920		
Uranium PreP	WG	7929		
pH	WG	7016		

End of Report -- 26 Analyses.

T E M P L A T E R E P O R T for WH:

Log Type: ** PLANT **

Report for : FUEL
Mailstop : 5201 Phone Number : 3244

Date Received : Date completed :
Time Received : Time completed :

GWA charged : 100332524 Reviewed by

MSA mR/hr : 1 Signature _____

Hazard Index : 1E6 Lab QC/QA reviewed by

Quality Level : NO Signature _____

COMMENTS: SEND COPY OF FINAL REPORT TO DAVE OLSEN, MS 5111

Analysis	Sample	Method	Analyst	Results
AL/F RATIO	WH	1023		
Acid	WH	7012		
Aluminum	WH	7100		
COMPOSITES	WH	7963		
	WH	7963		
Chloride	WH	7171		
Flash Point	WH	7985		
Fluoride	WH	7093		
GROSS BETA	WH	7970		
Mercury	WH	7802		
Nitrate	WH	7074		
Potassium	WH	2118		
Sodium	WH	2118		
Sulfate	WH	7168		
TOC	WH	8060		
TOC(r)	WH	8060		
U234	WH	8920		
U235	WH	8920		
U236	WH	8920		
U238	WH	8920		
URANIUM FOR ACC	WH	8920		
URANIUM.	WH	8920		
Uranium	WH	7920		
	WH	7920		
Uranium PreP	WH	7929		
pH	WH	7016		

End of Report -- 26 Analyses.

F I N A L R E P O R T for WG:101 10/28/02

Log Type: ** PLANT **

Report for : NWCF
Mailstop : 5218

Log Number : 02-10283
Phone Number : 6-5456

Date Received : Oct 29 2002
Time Received : 13:20

Date Approved : Jan 16 2003
Time Approved : 13:46

GWA charged : 100323H55

Reviewed by KIMBERLY WHITEHEAD

MSA mR/hr : 1

Signature _____

Hazard Index : >1E4

Laboratory QA Review

PCBs >50 ppm : NO

Signature _____

COMMENTS: SEND COPY OF FINAL REPORT TO DAVE OLSEN, MS 5111

Analysis	Lab Spl ID	Field Spl ID	Method	Analyst	Results
AL/F RATIO	2BQ49	WG:101	11023	RAH	Ratio Not Performed
Acid	2BQ49	WG:101	57012	RDW	3.93E-01 +- 8.4E-02 Normal Acid
Aluminum	2BQ49	WG:101	52900	DSL	2.44934E-03 Molar
Chloride	2BQ49	WG:101	57171	RDW	5.4E+01 +- 1.3E+01 ug/mL
Flash Point	2BQ49	WG:101	17985	AWO	NO FLASH @ 60.00 deg C corrected
Fluoride	2BQ49	WG:101	57093	AWO	Not Detected: MDL=26 ug/mL
GROSS BETA	2BQ49	WG:101	87970	RAH	8.98E+05 +- 5.2E+04 B/Min/ml
Mercury	2BQ49	WG:101	77802	RAH	1.65E+00 +- 2.2E-01 ug/ml
Nitrate	2BQ49	WG:101	97074	BGP	5.22E-03 +- 5.8E-04 Molar
Potassium	2BQ49	WG:101	52900	DSL	1.19173E-03 Molar
Sodium	2BQ49	WG:101	52900	DSL	1.08865E-02 Molar
Sulfate	2BQ49	WG:101	97168	BGP	5.8E+01 +- 1.8E+01 ug/ml
TOC	2BQ49	WG:101	18060	BGP	Not Detected: MDL=9e+01 ug/ml
U234	2BQ49	WG:101	28920	DDJ	3.4E-03 WEIGHT %
U235	2BQ49	WG:101	28920	DDJ	4.919E-01 WEIGHT %
U236	2BQ49	WG:101	28920	DDJ	2.39E-02 WEIGHT %
U238	2BQ49	WG:101	28920	DDJ	9.94808E+01 WEIGHT %
URANIUM.	2BQ49	WG:101	28920	DDJ	2.673E-03 g/kg
Uranium	2BQ49	WG:101	17920	BGP	2.21E-03 +- 5.9E-04 G/L
	2BQ49	WG:101	17920	BGP	2.43E-03 +- 6.2E-04 G/L
Uranium PreP	2BQ49	WG:101	17929	AWO	1.0E+00 ml
End of Report --	21 results.				

F I N A L R E P O R T for WG:101 8

Log Type: ** PLANT **

Report for : FUEL
Mailstop : 5201

Log Number : 02-04242
Phone Number : 3244

Date Received : Apr 25 2002
Time Received : 10:40

Date Approved : May 28 2002
Time Approved : 15:34

GWA charged : 51R101327

Reviewed by KIMBERLY WHITEHEAD

MSA mR/hr : 1

Signature _____

Hazard Index : 1E6

Laboratory QA Review

PCBs >50 ppm : NO

Signature _____

COMMENTS: SEND COPY OF FINAL REPORT TO DAVE OLSEN, MS 5111 - Use GWA 51R101327

Analysis	Lab Spl ID	Field Spl ID	Method	Analyst	Results
AL/F RATIO	2AO12	WG	11023	GDD	Ratio Not Performed
Acid	2AO12	WG	57012	RAH	4.98E-01 +- 7.9E-02 Normal Acid
Aluminum	2AO12	WG	87100	GDD	4.37E-03 +- 3.0E-04 MOLAR
Chloride	2AO12	WG	57171	RAH	8.0E+01 +- 1.2E+01 ug/mL
Flash Point	2AO12	WG	17985	GDD	NO FLASH @ 60.00 deg C corrected
Fluoride	2AO12	WG	57093	AWO	Not Detected: MDL=45.37 ug/mL
GROSS BETA	2AO12	WG	87970	RAH	9.84E+04 +- 4.2E+03 B/Min/ml
Mercury	2AO12	WG	87802	RAH	1.57E+00 +- 4.5E-01 ug/ml
Nitrate	2AO12	WG	97074	GDD	2.887E+04 +- 7.6E+02 ug/mL
Potassium	2AO12	WG	12800	SDN	4.94E+01 ug/mL
Sodium	2AO12	WG	12800	SDN	2.55E+02 ug/mL
Sulfate	2AO12	WG	97168	BGP	6.9E+01 +- 1.8E+01 ug/ml
TOC	2AO12	WG	18060	BGP	9.5E+01 +- 2.8E+01 ug/ml
U234	2AO12	WG	28920	DDJ	2.5E+00 WEIGHT %
U235	2AO12	WG	28920	DDJ	8.0E+00 WEIGHT %
U236	2AO12	WG	28920	DDJ	0.0E+00 WEIGHT %
U238	2AO12	WG	28920	DDJ	8.95E+01 WEIGHT %
URANIUM FOR ACC	2AO12	WG	28920	DDJ	2.9E-04 g/kg
URANIUM.	2AO12	WG	28920	DDJ	2.9E-04 g/kg
Uranium	2AO12	WG	17920	RAH	< 3.94794E-04 G/L
	2AO12	WG	17920	RAH	< 3.94794E-04 G/L
Uranium PreP	2AO12	WG	17929	BGP	1.0E+00 ml
End of Report --	22 results.				

F I N A L R E P O R T for WH:101

Log Type: ** PLANT **

Report for : FUEL
Mailstop : 5201

Log Number : 02-03272
Phone Number : 3244

Date Received : Mar 28 2002
Time Received : 09:21

Date Approved : Jun 26 2002
Time Approved : 14:24

GWA charged : 51R101327

Reviewed by JEFF LAUG

MSA mR/hr : 10

Signature _____

Hazard Index : 1E6

Laboratory QA Review

PCBs >50 ppm : NO

Signature _____

COMMENTS: SEND COPY OF FINAL REPORT TO DAVE OLSEN, MS 5111.

Analysis	Lab Spl ID	Field Spl ID	Method	Analyst	Results
AL/F RATIO		2AK33	11023	AWO	Ratio Not Performed
Acid		2AK33	57012	AWO	3.24E-01 +- 7.3E-02 Normal Acid
Aluminum		2AK33	52900	LAM	2.12167E-03 Molar
Chloride		2AK33	57171	AWO	7.5E+01 +- 1.2E+01 ug/mL
Flash Point		2AK33	17985	GDD	NO FLASH @ 60.00 deg C corrected
Fluoride		2AK33	57093	AWO	Not Detected: MDL=23.53 ug/mL
GROSS BETA		2AK33	87970	BGP	8.07E+03 +- 4.4E+02 B/Min/ml
Mercury		2AK33	77802	RAH	1.003E+00 +- 7.4E-02 ug/ml
Nitrate		2AK33	97074	GDD	1.710E+04 +- 3.5E+02 ug/mL
Potassium		2AK33	12800	SDN	55.2 ug/mL
Sodium		2AK33	12800	SDN	236. ug/mL
Sulfate		2AK33	97168	GDD	7.1E+01 +- 1.8E+01 ug/ml
TOC		2AK33	18060	BGP	1.30E+02 +- 2.8E+01 ug/ml
U234		2AK33	28920	DDJ	0.0E+00 WEIGHT %
U235		2AK33	28920	DDJ	4.011E+00 WEIGHT %
U236		2AK33	28920	DDJ	0.0E+00 WEIGHT %
U238		2AK33	28920	DDJ	9.599E+01 WEIGHT %
URANIUM FOR ACC		2AK33	28920	DDJ	3.29E-04 g/kg
URANIUM.		2AK33	28920	DDJ	3.29E-04 g/kg
Uranium		2AK33	17920	BGP	< 3.94794E-04 G/L
		2AK33	17920	BGP	< 3.94794E-04 G/L
Uranium PreP		2AK33	17929	BGP	1.0E+00 ml

End of Report -- 22 results.

F I N A L R E P O R T for WH:101 N/A

Log Type: ** PLANT **

Report for : FUEL
Mailstop : 5201

Log Number : 01-08297
Phone Number : 3244

Date Received : Aug 30 2001
Time Received : 12:37

Date Approved : Oct 10 2001
Time Approved : 10:16

GWA charged : 51F1052B3

Reviewed by JEFF LAUG

MSA mR/hr : 3.0

Signature _____

Hazard Index : 1E5

Laboratory QA Review

PCBs >50 ppm : NO

Signature _____

COMMENTS: SEND COPY OF FINAL REPORT TO DAVE OLSEN, MS 5111 - Use GWA 51f10a20

Analysis	Lab Spl ID	Field Spl ID	Method	Analyst	Results
AL/F RATIO		1CN57	11023	BCS	Ratio Not Performed
Acid		1CN57	57012	RNR	3.62E-01 +- 1.1E-02 Normal Acid
Aluminum		1CN57	87100	BCS	1.07E-03 +- 2.3E-04 MOLAR
Chloride		1CN57	57171	RNR	6.18E+01 +- 5.1E+00 ug/mL
Flash Point	1CN52	WH-101	17985	BCS	NO FLASH @ 60.00 deg C corrected
Fluoride		1CN57	57093	RAH	Not Detected: MDL=69.88 ug/mL
GROSS BETA		1CN57	87970	BCS	1.688E+05 +- 9.1E+03 B/Min/ml
Mercury		1CN57	87802	RAH	7.6E-01 +- 1.2E-01 ug/ml
Nitrate	1CN52	WH-101	97074	BCS	3.412E-01 +- 8.0E-03 Molar
Potassium		1CN57	12800	SDN	43.8 ug/mL
Sodium		1CN57	12800	SDN	186. ug/mL
Sulfate		1CN57	97168	BCS	5.93E+01 +- 4.3E+00 ug/ml
TOC		1CN57	18060	BGP	1.290E+02 +- 9.0E+00 ug/ml
U234		1CN57	24900	DDJ	1.6E-01 WEIGHT %
U235		1CN57	24900	DDJ	6.37E+00 WEIGHT %
U236		1CN57	24900	DDJ	3.8E-01 WEIGHT %
U238		1CN57	24900	DDJ	9.31E+01 WEIGHT %
URANIUM FOR ACC		1CN57	24900	DDJ	1.28E-04 g/kg
URANIUM.		1CN57	24900	DDJ	1.28E-04 g/kg
Uranium		1CN57	17920	BCS	< 3.24219E-04 G/L
		1CN57	17920	BCS	< 3.24219E-04 G/L
Uranium PreP		1CN57	17929	BGP	1.0E+00 ml

End of Report -- 22 results.

F I N A L R E P O R T for WL-103 T/D

Log Type: ** PLANT **

Report for : NEILL
Mailstop : 5116

Log Number : 96-100815
Phone Number : 6-3226

Date Received : Oct 08 1996
Time Received : 22:06

Date Approved : Oct 12 1996
Time Approved : 16:48

GWA charged : 522020702

Reviewed by CLAYNE GRIGG

MSA mR/hr : <0.1

Signature _____

Hazard Index : <1E4

Laboratory QA Review

PCBs >50 ppm : NO

Signature _____

COMMENTS:

Analysis	Lab Spl ID	Field Spl ID	Method	Analyst	Results
Acid	6DC01	WL-103	17012	RAH	titrated less than .5ml
Chloride	6DC01	WL-103	57171	RAH	< 1.25947E+01 ug/ml
Fluoride	6DC01	WL-103	87092	RAH	2.40E+01 +- 1.7E+00 ug/ml
SpGr	6DC01	WL-103	47981	BCS	9.98685E-01 +- 2.6E-04 @ 25/4
Sulfate	6DC01	WL-103	97168	BCS	< 9.03652E+00 uG/mL
Uranium	6DC01	WL-103	17920	RAH	1.99E-02 +- 1.2E-03 G/L
	6DC01	WL-103	17920	RAH	2.02E-02 +- 1.2E-03 G/L
pH	6DC01	WL-103	87017	RLC	2.46E+00 +- 1.6E-01 pH

End of Report -- 8 results.

F I N A L R E P O R T for WL-104 T/D

Log Type: ** PLANT **

Report for : NEILL
Mailstop : 5116

Log Number : 96-100816
Phone Number : 6-3226

Date Received : Oct 09 1996
Time Received : 08:52

Date Approved : Dec 23 1996
Time Approved : 15:11

GWA charged : 522020702

Reviewed by JACQUIE JANIBAGIAN

MSA mR/hr : None

Signature _____

Hazard Index : None

Laboratory QA Review

PCBs >50 ppm : NO

Signature _____

COMMENTS:

Analysis	Lab Spl ID	Field Spl ID	Method	Analyst	Results
Acid	6DC30	WL-104	17012	RAH	titrated less than .5 ml
Chloride	6DC30	WL-104	57171	RAH	< 1.25947E+01 ug/ml
Fluoride	6DC30	WL-104	87092	RAH	3.49E+01 +- 1.7E+00 ug/ml
SpGr	6DC30	WL-104	47981	BCS	9.99012E-01 +- 2.6E-04 @ 25/4
Sulfate	6DC30	WL-104	97168	BCS	< 9.03652E+00 uG/mL
Uranium	6DC30	WL-104	17920	RAH	2.35E-02 +- 1.3E-03 G/L
	6DC30	WL-104	17920	RAH	2.23E-02 +- 1.6E-03 G/L
pH	6DC30	WL-104	87017	RLC	2.75E+00 +- 1.6E-01 pH

End of Report -- 8 results.

F I N A L R E P O R T for WL-105:105 DEMIN

Log Type: ** PLANT **

Report for : R L HASTINGS
Mailstop : 5111
Log Number : 97-09169
Phone Number : 6-3846

Date Received : Sep 16 1997
Time Received : 22:48
Date Approved : Sep 29 1997
Time Approved : 17:30

GWA charged : 522020602
Reviewed by ROBERTA JORDAN

MSA mR/hr : None
Signature _____

Hazard Index : None
Laboratory QA Review

PCBs >50 ppm : NO
Signature _____

COMMENTS:

Analysis	Lab Spl ID	Field Spl ID	Method	Analyst	Results
Acid	7HR36	SAMPLE 3	87012	SRT	<.0241 Normal Acid
Aluminum	7HR36	SAMPLE 3	87100	BCS	< 4.74571E-04 MOLAR
	7HR36	SAMPLE 3	87100	BCS	< 6.72322E-04 MOLAR
Chloride	7HR36	SAMPLE 3	57171	RAH	< 4.11211E+00 ug/mL
Fluoride	7HR36	SAMPLE 3	87092	RAH	5.07E-04 +- 8.1E-05 molar
GROSS BETA	7HR36	SAMPLE 3	87970	KFM	2.05E+03 +- 1.9E+02 B/Min/ml
Sulfate	7HR36	SAMPLE 3	97168	BCS	< 4.06935E+00 ug/ml
Uranium	7HR36	SAMPLE 3	17920	KFM	< 3.46607E-01 ug/mL
	7HR36	SAMPLE 3	17920	KFM	< 3.46607E-01 ug/mL
pH	7HR36	SAMPLE 3	87017	SRT	2.404E+00 +- 5.6E-02

End of Report -- 10 results.

6153

FY99 Balance of Plant
SDG Results Package
Index:

022

COVER PAGE

1. SDG Transmittal Date:

JUN 13 2000

2. Subcontractor Name: INTEC ANALYTICAL CHEMISTRY LABORATORY
Analytical Laboratories Department
Bechtel BWXT Idaho, LLC

3. Contract Number: ER-SOW-169

4. SDG Type: Semivolatile Organics by GC/MS

5VOC
99 0210-1

5. Reporting Tier: Tier II

6. SDG Number: NCD-123

7. SAP Number: N/A

ORIGINAL

8. Applicable TOS Modification Numbers: N/A

FOR CAC — 6/13/00
Catherine A. Crowder — Date
ALD Organic Analyses Supervisor

6/12/2000
Patrick D. Troescher — Date
ALD Assistant Quality Assurance Officer

FOR MRT — 6/13/00
Mariam R. Thomas — Date
Semivolatile Analyses Technical Leader

1D

SEMIVOLATILE ORGANICS ANALYSIS DATA SHEET
APPENDIX IX ANALYTES

INEEL Sample No. NCD-123

Lab Name: Analytical Chemistry Lab
Contract: NA

Lab Code: ALD-INTEC TOS No: NA
Method No: 9270 SDG No: NCD-123

Matrix (soil/water): WATER
Lab Sample ID: 9AH61 ; 9AH61DL10

Sample wt/vol: 100 (g/mL) mL
Lab File ID: SS200192 ; SS200303

Level: (low/med) LOW
Date Received: 02/10/99

% Moisture: NA Decanted (Y/N): NA
Date Extracted: 02/11/99

Concentrated Extract Volume: 1000 (µL)
Date Analyzed: 02/16/99 ; 03/08/99

Injection Volume: 1 (µL)
Dilution Factor: 1 ; 10

GPC Cleanup (Y/N): NO
pH: NA

CAS NO.	COMPOUND	CONCENTRATION UNITS ug/L	Q
62-75-9	N-Nitrosodimethylamine	250	UD
110-86-1	Pyridine	250	UD
108-95-2	Phenol	250	UD
111-44-4	bis(2-Chloroethyl)ether	250	UD
95-57-8	2-Chlorophenol	250	UD
541-73-1	1,3-Dichlorobenzene	250	UD
106-46-7	1,4-Dichlorobenzene	250	UD
95-50-1	1,2-Dichlorobenzene	250	UD
95-48-7	2-Methylphenol	250	UD
108-60-1	bis(2-Chloroisopropyl)ether	250	UDM
106-44-5	3 & 4-Methylphenol	250	UD
621-64-7	N-Nitroso-di-n-propylamine	250	UD
67-72-1	Hexachloroethane	250	UD
98-95-3	Nitrobenzene	25	U
78-59-1	Isophorone	25	U
88-75-5	2-Nitrophenol	25	U
105-67-9	2,4-Dimethylphenol	25	U
111-91-1	bis(2-Chloroethoxy)methane	25	U
120-83-2	2,4-Dichlorophenol	25	U
120-82-1	1,2,4-Trichlorobenzene	25	U
91-20-3	Naphthalene	25	U
106-47-8	4-Chloroaniline	25	U
87-68-3	Hexachlorobutadiene	25	U

1E
SEMIVOLATILE ORGANICS ANALYSIS DATA SHEET
APPENDIX IX ANALYTES

INEEL Sample No. NCD-123

Lab Name: Analytical Chemistry Lab
Contract: NA
Lab Code: ALD-INTEC TOS No: NA
Method No: 9270 SDG No: NCD-123
Matrix (soil/water): WATER
Lab Sample ID: 9AH61 ; 9AH61DL10
Sample wt/vol: 100 (g/mL) mL
Lab File ID: SS200192 ; SS200303
Level: (low/med) LOW
Date Received: 02/10/99
% Moisture: NA Decanted (Y/N): NA
Date Extracted: 02/11/99
Concentrated Extract Volume: 1000 (µL)
Date Analyzed: 02/16/99 ; 03/08/99
Injection Volume: 1 (µL)
Dilution Factor: 1 ; 10
GPC Cleanup (Y/N): NO
pH: NA

CAS NO.	COMPOUND	CONCENTRATION UNITS ug/L	Q
59-50-7	4-Chloro-3-methylphenol	25	U
91-57-6	2-Methylnaphthalene	25	U
77-47-4	Hexachlorocyclopentadiene	25	U
88-06-2	2,4,6-Trichlorophenol	25	U
95-95-4	2,4,5-Trichlorophenol	25	U
91-58-7	2-Chloronaphthalene	25	U
88-74-4	2-Nitroaniline	25	U
131-11-3	Dimethylphthalate	25	U
606-20-2	2,6-Dinitrotoluene	25	U
208-96-8	Acenaphthylene	25	U
99-09-2	3-Nitroaniline	25	U
83-32-9	Acenaphthene	25	U
51-28-5	2,4-Dinitrophenol	76	M
100-02-7	4-Nitrophenol	25	U
132-64-9	Dibenzofuran	25	U
121-14-2	2,4-Dinitrotoluene	25	U
84-66-2	Diethylphthalate	25	UM
7005-72-3	4-Chlorophenyl-phenylether	25	U
86-73-7	Fluorene	25	U
100-01-6	4-Nitroaniline	25	U
534-52-1	4,6-Dinitro-2-methylphenol	25	U
86-30-6	N-Nitrosodiphenylamine	25	U
126-73-8	Tri-n-butyl phosphate	25	UM

1F

SEMIVOLATILE ORGANICS ANALYSIS DATA SHEET
APPENDIX IX ANALYTES

INEEL Sample No. NCD-123

Lab Name: Analytical Chemistry Lab
Contract: NA
Lab Code: ALD-INTEC TOS No: NA
Method No: 9270 SDG No: NCD-123
Matrix (soil/water): WATER
Lab Sample ID: 9AH61 ; 9AH61DL10
Sample wt/vol: 100 (g/mL) mL
Lab File ID: SS200192 ; SS200303
Level: (low/med) LOW
Date Received: 02/10/99
% Moisture: NA Decanted (Y/N): NA
Date Extracted: 02/11/99
Concentrated Extract Volume: 1000 (µL)
Date Analyzed: 02/16/99 ; 03/08/99
Injection Volume: 1 (µL)
Dilution Factor: 1 ; 10
GPC Cleanup (Y/N): NO
pH: NA

CAS NO.	COMPOUND	CONCENTRATION UNITS ug/L	Q
103-33-3	Azobenzene	25	U
101-55-3	4-Bromophenyl-phenylether	25	U
118-74-1	Hexachlorobenzene	25	U
87-86-5	Pentachlorophenol	25	U
85-01-8	Phenanthrene	25	U
120-12-7	Anthracene	25	U
86-74-8	Carbazole	25	U
84-74-2	Di-n-butylphthalate	25	U
206-44-0	Fluoranthene	25	U
129-00-0	Pyrene	25	U
85-68-7	Butylbenzylphthalate	25	U
91-94-1	3,3'-Dichlorobenzidine	25	U
218-01-9	Chrysene	25	U
56-55-3	Benzo(a)anthracene	25	U
117-81-7	bis(2-Ethylhexyl)phthalate	47	
117-84-0	Di-n-octylphthalate	25	U
205-99-2	Benzo(b)fluoranthene	25	U
207-08-9	Benzo(k)fluoranthene	25	U
50-32-8	Benzo(a)pyrene	25	U
193-39-5	Indeno(1,2,3-cd)pyrene	25	U
53-70-3	Dibenzo(a,h)anthracene	25	U
191-24-2	Benzo(g,h,i)perylene	25	U

SEMIVOLATILE ORGANICS ANALYSIS DATA SHEET
TENTATIVELY IDENTIFIED COMPOUNDS
APPENDIX IX ANALYTES

INEEL Sample No. NCD-123

Lab Name: Analytical Chemistry Lab
Contract: NA

Lab Code: ALD-INTEC TOS No: NA
Method No: 9270 SDG No: NCD-123

Matrix (soil/water): WATER
Lab Sample ID: 9AH61 ; 9AH61DL10

Sample wt/vol: 100 (g/mL) mL
Lab File ID: SS200192 ; SS200302

Level: (low/med) LOW
Date Received: 02/10/99

% Moisture: NA Decanted (Y/N): NA
Date Extracted: 02/11/99

Concentrated Extract Volume: 1000 (µL)
Date Analyzed: 02/16/99 ; 03/08/99

Injection Volume: 1 (µL)
Dilution Factor: 1 ; 10

GPC Cleanup (Y/N): NO pH: N/A
Concentration Units: ug/L

No. TICs Found: 20

	CAS NO.	COMPOUND	RT	EST. CONC. ug/L	Q
1	---	Unknown	8:45	550	JD
2	---	Unknown	10:49	1900	JD
3	---	Unknown	10:54	2000	JD
4	---	Unknown	11:07	2200	JD
5	---	Unknown	13.97	21	J
6	65-85-0	Benzoic Acid	13.98	21	JN
7	---	Unknown	14.08	31	J
8	---	Unknown	15.82	35	J
9	---	Unknown	16.52	20	J
10	---	Unknown	17.50	24	J
11	---	Unknown	18.22	38	J
12	---	Unknown	19.27	19	J
13	---	Unknown	19.87	56	J
14	---	Unknown	21.43	35	J
15	---	Unknown	22.94	19	J
16	---	Unknown	29.32	41	J
17	---	Unknown	32.88	320	J
18	---	Unknown	38.06	820	J
19	---	Unknown	44.50	1200	J
20	---	Unknown	52.83	1100	J

Q153.101.14

FY00 Balance of Plant
SDG Results Package
Index:

39

COVER PAGE

1. SDG Transmittal Date: July 19, 2000

2. Subcontractor Name: INTEC ANALYTICAL CHEMISTRY LABORATORY
   Analytical Laboratories Department
   Bechtel BWXT Idaho, LLC

3. Contract Number: ER-SOW-169

4. SDG Type: Semivolatile Organics by GC/MS

5. Reporting Tier: Tier II

SVOC
600301-1
600307-3

6. SDG Number: NCC101/119-000301

7. SAP Number: N/A

8. Applicable TOS Modification Numbers: N/A

Jeffrey L. Jeter
Acting ALD Organic Analyses Supervisor
7/19/00
Date

Shelly J. Sailer
ALD Quality Assurance Officer
07/19/2000
Date

Mariam R. Thomas
Semivolatile Analyses Technical Leader
7/19/00
Date

ORIGINAL

001/70

1D

SEMIVOLATILE ORGANICS ANALYSIS DATA SHEET
APPENDIX IX ANALYTES

INEEL Sample No. WL-106-000307

Lab Name: Analytical Chemistry Lab
Contract: N/A
Lab Code: ALD-INTEC TOS No: N/A
Method No: 9270 SDG No: NCC101/119-000301
Matrix (soil/water): WATER
Lab Sample ID: 0AN16
Sample wt/vol: 100 (g/mL) mL
Lab File ID: SS201499
Level: (low/med) LOW
Date Received: 03/08/00
% Moisture: N/A Decanted (Y/N): N/A
Date Extracted: 03/08/00
Concentrated Extract Volume: 1000 (µL)
Date Analyzed: 03/20/00
Injection Volume: 1 (µL)
Dilution Factor: 1
GPC Cleanup (Y/N): NO
pH: N/A

CAS NO.	COMPOUND	CONCENTRATION UNITS ug/L	Q
62-75-9	N-Nitrosodimethylamine	20	UM
110-86-1	Pyridine	20	U
108-95-2	Phenol	20	U
111-44-4	bis(2-Chloroethyl)ether	20	U
95-57-8	2-Chlorophenol	20	U
541-73-1	1,3-Dichlorobenzene	20	U
106-46-7	1,4-Dichlorobenzene	20	U
95-50-1	1,2-Dichlorobenzene	20	U
95-48-7	2-Methylphenol	20	U
108-60-1	bis(2-Chloroisopropyl)ether	20	U
106-44-5	3 & 4-Methylphenol	20	U
621-64-7	N-Nitroso-di-n-propylamine	20	U
67-72-1	Hexachloroethane	20	U
98-95-3	Nitrobenzene	20	UM
78-59-1	Isophorone	20	U
88-75-5	2-Nitrophenol	20	U
105-67-9	2,4-Dimethylphenol	20	U
111-91-1	bis(2-Chloroethoxy)methane	20	U
120-83-2	2,4-Dichlorophenol	20	U
120-82-1	1,2,4-Trichlorobenzene	20	U
91-20-3	Naphthalene	20	U
106-47-8	4-Chloroaniline	20	U
87-68-3	Hexachlorobutadiene	20	U

1E

SEMIVOLATILE ORGANICS ANALYSIS DATA SHEET
APPENDIX IX ANALYTES

INEEL Sample No. WL-106-000307

Lab Name: Analytical Chemistry Lab
Lab Code: ALD-INTEC TOS No: N/A
Matrix (soil/water): WATER
Sample wt/vol: 100 (g/mL) mL
Level: (low/med) LOW
% Moisture: N/A Decanted (Y/N): N/A
Concentrated Extract Volume: 1000 (µL)
Injection Volume: 1 (µL)
GPC Cleanup (Y/N): NO

Contract: N/A
Method No: 9270 SDG No: NCC101/119-000301
Lab Sample ID: 0AN16
Lab File ID: SS201499
Date Received: 03/08/00
Date Extracted: 03/08/00
Date Analyzed: 03/20/00
Dilution Factor: 1
pH: N/A

CAS NO.	COMPOUND	CONCENTRATION UNITS ug/L	Q
59-50-7	4-Chloro-3-methylphenol	20	U
91-57-6	2-Methylnaphthalene	20	U
77-47-4	Hexachlorocyclopentadiene	20	U
88-06-2	2,4,6-Trichlorophenol	20	U
95-95-4	2,4,5-Trichlorophenol	20	U
91-58-7	2-Chloronaphthalene	20	U
88-74-4	2-Nitroaniline	20	UM
131-11-3	Dimethylphthalate	20	U
606-20-2	2,6-Dinitrotoluene	20	U
208-96-8	Acenaphthylene	20	U
99-09-2	3-Nitroaniline	20	U
83-32-9	Acenaphthene	20	U
51-28-5	2,4-Dinitrophenol	13	J
100-02-7	4-Nitrophenol	20	U
132-64-9	Dibenzofuran	20	U
121-14-2	2,4-Dinitrotoluene	20	U
84-66-2	Diethylphthalate	20	UM
7005-72-3	4-Chlorophenyl-phenylether	20	U
86-73-7	Fluorene	20	U
100-01-6	4-Nitroaniline	20	U
534-52-1	4,6-Dinitro-2-methylphenol	5	J
86-30-6	N-Nitrosodiphenylamine	20	U
126-73-8	Tri-n-butyl phosphate	170	EM

1F

SEMIVOLATILE ORGANICS ANALYSIS DATA SHEET
APPENDIX IX ANALYTES

INEEL Sample No. WL-106-000307

Lab Name: Analytical Chemistry Lab
Lab Code: ALD-INTEC TOS No: N/A
Matrix (soil/water): WATER
Sample wt/vol: 100 (g/mL) mL
Level: (low/med) LOW
% Moisture: N/A Decanted (Y/N): N/A
Concentrated Extract Volume: 1000 (µL)
Injection Volume: 1 (µL)
GPC Cleanup (Y/N): NO

Contract: N/A
Method No: 9270 SDG No: NCC101/119-000301
Lab Sample ID: 0AN16
Lab File ID: SS201499
Date Received: 03/08/00
Date Extracted: 03/08/00
Date Analyzed: 03/20/00
Dilution Factor: 1
pH: N/A

CAS NO.	COMPOUND	CONCENTRATION UNITS ug/L	Q
103-33-3	Azobenzene	20	UM
101-55-3	4-Bromophenyl-phenylether	20	U
118-74-1	Hexachlorobenzene	20	U
87-86-5	Pentachlorophenol	20	U
85-01-8	Phenanthrene	20	U
120-12-7	Anthracene	20	U
86-74-8	Carbazole	20	U
84-74-2	Di-n-butylphthalate	20	UM
206-44-0	Fluoranthene	20	U
129-00-0	Pyrene	20	U
85-68-7	Butylbenzylphthalate	20	U
91-94-1	3,3'-Dichlorobenzidine	20	U
218-01-9	Chrysene	20	U
56-55-3	Benzo(a)anthracene	31	
117-81-7	bis(2-Ethylhexyl)phthalate	20	U
117-84-0	Di-n-octylphthalate	20	U
205-99-2	Benzo(b)fluoranthene	20	U
207-08-9	Benzo(k)fluoranthene	20	U
50-32-8	Benzo(a)pyrene	20	U
193-39-5	Indeno(1,2,3-cd)pyrene	20	U
53-70-3	Dibenzo(a,h)anthracene	20	U
191-24-2	Benzo(g,h,i)perylene	20	U

1M

SEMIVOLATILE ORGANICS ANALYSIS DATA SHEET
TENTATIVELY IDENTIFIED COMPOUNDS
APPENDIX IX ANALYTES

INEEL Sample No. WL-106-000307

Lab Name: Analytical Chemistry Lab
Lab Code: ALD-INTEC TOS No: N/A
Matrix (soil/water): WATER
Sample wt/vol: 100 (g/mL) mL
Level: (low/med) LOW
% Moisture: N/A Decanted (Y/N): N/A
Concentrated Extract Volume: 1000 (µL)
Injection Volume: 1 (µL)
GPC Cleanup (Y/N): NO
No. TICs Found: 20

Contract: N/A
Method No: 9270 SDG No: NCC101/119-00030 1
Lab Sample ID: 0AN16
Lab File ID: SS201499
Date Received: 03/08/00
Date Extracted: 03/08/00
Date Analyzed: 03/20/00
Dilution Factor: 1
pH: NA

	CAS NO.	COMPOUND	RT (min)	EST. CONC. ug/L	Q
1	---	Unknown	3:56	14	J
2	---	Unknown	5:57	11	J
3	67-66-3	Chloroform	4:17	12	J
4	---	Unknown	7:28	85	J
5	---	Unknown	13:06	6300	J
6	---	Unknown	16:10	350	J
7	---	Substituted benzene	21:36	37	J
8	---	Substituted benzene	21:56	23	J
9	---	Substituted benzene	22:00	24	J
10	---	Substituted benzene	22:12	23	J
11	---	Substituted benzene	22:32	28	J
12	---	Substituted benzene	23:20	24	J
13	---	Substituted benzene	23:26	14	J
14	---	Substituted benzene	23:38	13	J
15	---	Substituted benzene	23:59	11	J
16	---	Unknown	24:07	19	JB
17	---	Substituted benzene	24:30	27	J
18	---	Unknown	28:44	21	J
19	---	Unknown	29:31	22	J
20	---	Unknown	30:18	65	J