BNFL Inc.
MORRISON KNUDSEN PLAZA
P.O. BOX 73/BOISE, IDAHO U.S.A. 83729
PHONE (208) 386-5789

Transmittal Letter

Project Name: INEEL AMWTP	Transmittal Number: AM-BN-TL-2290 / Work Order Number: 5232
	Date: November 21, 2000
TO: Distribution	REFERENCES
	Name: NA
	Equipment Number: NA
	Purchase Order Number: NA
	Vendor Order Number: NA
Ξ TRANSMITTED HEREWITH	_ RETURNING FOR STATUS NOTED
For: _ Review and comment _ Approval Ξ **Record** _ Information _ As requested _ Other	_ Reviewed A _ Reviewed as noted B _ Resubmit C _ For information D _ Other _____ E

Quantity	Item	Title/Description
1	EDF-172 Rev. 00– dated 11/14/00	Engineering Design File (EDF-172- Rev. 00) Author: B. Holmes – Title: Secondary Waste Flowsheet . All Required signatures obtained and Final Approval was 11/21/00. **EDF-172 Rev. 00 - is Closed.**

DISTRIBUTION:

cc: w/attachments

BNFL-IF
C. Jierree
B. Holmes

BEL
C. Davies

BNFL-Den
J. Buckle

BNFL-BOISE
G. Harrop
J. Isherwood

MK
J. Naaf

EDF File 2.15
BNFL-File 8.27 **(TL-Only)**
MK DC File 8.18
BNFL Project File 2.025 - w/o attachments

REMARKS/INSTRUCTIONS:

By:

Name: Grenville Harrop

Title: BNFL Project Manager

BNFL Inc.

ADVANCED MIXED WASTE TREATMENT PROJECT (AMWTP)

(1) EDF Number: BNFL-5232-EDF-172
(2) Revision Number: Rev. 0
(3) Company Submitting: BNFL Inc.
(4) Internal Doc. No.

ENGINEERING DESIGN FILE

(5) Task: Technology Development

(6) Subtask: Secondary Waste Flowsheet (7) Total Pages: 8

(8) Title: Secondary Waste Flowsheet | Design Basis ❑ Previously Approved Design Baseline ❑

(9) Summary/Conclusion:

Introduction:

This EDF outlines the secondary waste arisings from the Advanced Mixed Waste Treatment Project. The EDF covers all wastes that falls into the categories of low-level waste or TRU Waste. It does not seek to predict either the volume or the fate of any non-rad-waste.

PP Dick Callow

(10) Originator Signature Date 11.14.00

(11) Supervisor Signature Date 11.14.00

(12) Required review and approvals:	All Subcontractors	Engineering Mngr.	Regulatory Mngr.	Quality Mngr.	Safety Mngr.	Technical Mngr.	Project Mngr.
						X	X

(12) Other Required Reviewers:

(12) Distribution:

(13) Project Mngr. Approval Date 11/22/00

(13) Engineering Mngr. Approval Date 11/22/00

N/A
(13) Regulatory Mngr. Approval Date

(13) ~~Safety Mngr.~~ ES&H Approval Date

(13) Quality Assurance Mngr. Approval Date

(13) Other Tech Mgr Date 11.14.00

(13) Other Date

(13) Other Date

Scope:

This EDF covers wastes arising from a number of sources. These include:

- Waste generated during retrieval (principally the tarpaulin and wood retrieved from the retrieval exercise and consigned as LLW).
- TRU waste recovered (soil) from the retrieval exercise (included in the main process flowsheets).
- Container waste (boxes and drums) generated from empty containers and to be consigned as LLW. This waste is also included in the main process flowsheets.
- Process wastes e.g. squeezants, analytical wastes, treated SCW (accounted for in the main process flowsheets).
- Maintenance cleaning and decontamination waste.

The EDF includes all secondary waste but the 'new' waste streams not covered elsewhere include the retrieval LLW and the maintenance, cleaning and decontamination wastes.

Sources of Information:

The information that supports this EDF comes from the PDC (Rev. 4) [Ref. 1] and from a review of secondary waste BNFL-5232-EDF-116 [Ref. 2] generated via an operations workshop and comprises of a bottom-up assessment of additional wastes. The information also includes an estimate of the volume of decontamination liquors. Information on container numbers are taken from the container flowsheet BNFL-5232-EDF-166 [Ref. 3].

Assumptions:

There is no detailed inventory of the secondary wastes that might assist in the validation of the secondary waste volumes used in this EDF. The principle assumptions that underpin the assessment are:

- All boxes and drums from the box and drum openings are consigned as LLW based on a logic argument supplemented by occasional swabbing.
- All other facility wastes are consigned as TRU waste.
- All facility TRU wastes are consigned to supercompaction apart from sorbed liquids that are routed to Mix and Repack.
- Up to 2,000 m^3 of TRU soil will be collected from retrieval operations.
- Liquids are to be sampled and sorbed at source in excess sorbent, preferably in a 55-gallon drum.
- Maintenance waste will be combined in 55-gallon drums.
- Compacted drums and box sections will be placed in plywood boxes.

Summary:

These data form the basis of the secondary waste flowsheet for AMWTP.

References:

1. Project Design Criteria Advanced Mixed Waste Treatment Project, Idaho National Engineering and Environmental Laboratory (BNFL Inc.), BNFL-2132-PDC-01, Rev. 4.
2. BNFL-5232-EDF-116, Rev. OA; Secondary Waste Arisings.
3. BNFL-5232-EDF-166, Rev. 0; Container Flowsheet.

Table 1. Secondary Waste Arisings

FACILITY	Stream ID	Numbers					Volume of Waste(m^3)
		LLW Export Boxes	Drums	Pucks	100 Gall O/Ps	TDOPs	
Broken down wooden process boxes	SW01	5,449					21,496
Crushed process drums	SW02	349					1,377
Used PPE, rags, decon debris,etc.	SW03		13,703				2,850
Maintenance metal debris waste (LLW)[1]	SW04		451				94
Maintenance metal debris waste (TRU)	SW05		451				94
Used HEPAs in drums	SW06		1,286				267
Supercompactor liquid squeezant	SW14						65
Absorbed supercompactor squeezant	SW07		938				195
Absorbed hydraulic oils	SW08		95				20
Absorbed decon water	SW09		605				126
Sweepings from box breakdown area	SW10		1,960				408
SCW core sample residues	SW11		149				31
Analytical lab absorbed liquid residues	SW13		368				77

[1] At present there is no means of demonstrating that an item is LLW therefore this waste is routed as TRU waste. If this situation changes this waste will be placed in boxes and routed to LLW.

http://webmail.wglnt.com/attach/EDF-172%2C Secondary Waste.doc?id=h2ns6n0u6p0eem0&mbox=INBOX&charset=escaped_unicode&uid=52&number=2&filename=EDF-172%2C%20Secondary%20Waste.doc

RETRIEVAL	Stream ID	Numbers					Volume of Waste(m^3)
		LLW Export Boxes	Drums	Pucks	100 Gall O/Ps	TDOPs	
Broken down boxes from Box Opening Facility[2]	3BD	223					878
Wood planks, framing lumber	RW02	88					347
Plywood –5360 sheets	RW03	107					422
Plastic sheeting	RW04	31					122
Plastic Pipes	RW05	1					4
Assorted metal piping, fence posts etc.	RW06	2					8
Retrieval operational waste (PPE etc)	RW07		919				191
Retrieval core sample residues	RW08		425				88
WMF-634 HEPA filters	RW09		49				10
Soil Generated During Retrieval Operations	RW10		9,615				2000

[2] The actual number of boxes containing drums that will need to be opened in the Box Opening Facility is unknown. The Volume Balance Flowsheet 6 shows >445, therefore a figure of 445 boxes containing drums is used as the basis here. Each LLW Export Box will contain two broken down waste boxes. Note that the number of boxes containing drums could increase or decrease.

http://webmail.wgint.com/attach/EDF-172%2C Secondary Waste.doc?sid=h2ns6n0u6p0eem0&mbox=INBOX&charset=escaped_unicode&uid=52&number=2&filename=EDF-172%2C%20Secondary%20Waste.doc

ANALYTICAL SAMPLES	Stream ID	Numbers					Volume of Waste(m^3)
		LLW Export Boxes	Drums	Pucks	100 Gall O/Ps	TDOPs	
Retrieval cores samples to laboratory	AS01						4
SCW samples to the laboratory	AS02						0.06
Supercompactor Squeezants samples to laboratory	AS03						0.94

SECONDARY WASTE TO LLW DISPOSAL	Stream ID	Numbers					Volume of Waste(m^3)
		LLW Export Boxes	Drums	Pucks	100 Gall O/Ps	TDOPs	
Total LLW from Facility to LLW Disposal	SW01 SW02	5,798					22,873
Total LLW from Retrieval to LLW Disposal	RW02 RW03 RW04 RW05 RW06 RW07 3BD	452	919				1,972
Total Secondary Waste to LLW Disposal		**6,250**	**919**				**24,845**

SECONDARY WASTE TO TRU WASTE DISPOSAL	Stream ID	Numbers					Volume of Waste(m^3)
		LLW Export Boxes	Drums	Pucks	100 Gall O/Ps	TDOPs	
From mix/repack to product certification	SW45					1,220	2,537
From supercompactor to overpack	SW51			17,900			931
From overpack to product certification	SW52				4,475		931
From product certification to TRU disposal	SW53				4,475	1,220	3,468
Total Secondary Waste to TRU Disposal					**4,475**	**1,220**	**3,468**

http://webmail.wgint.com/attach/EDF-172%2C Secondary Waste.doc?sid=2ml08ut65t8xho3s65s&mbox=INBOX&charset=escaped_unicode&uid=53&number=2&filename=EDF-172%2C%20Secondary%20Waste.doc

Table 2. Secondary Waste Routing

Secondary waste	Stream	Process Treatment
Facility		
Broken down wooden process boxes	SW01	LLW Disposal
Crushed process drums	SW02	LLW Disposal
Used PPE, rags, decon debris,etc.	SW03	Supercompactor
Maintenance metal debris waste (LLW)	SW04	Supercompactor
Maintenance metal debris waste (TRU)	SW05	Supercompactor
Used HEPA's in drums	SW06	Supercompactor
Supercompactor liquid squeezant	SW14	Mix & Repack
Absorbed supercompactor squeezant	SW07	Mix & Repack
Absorbed hydraulic oils	SW08	Mix & Repack
Absorbed decon water	SW09	Mix & Repack
Sweepings from box breakdown area	SW10	Supercompactor
SCW core sample residues	SW11	Mix & Repack
Analytical lab absorbed liquid residues	SW13	Mix & Repack
Retrieval		
Wood planks, framing lumber	RW02	LLW Disposal
Plywood - 5360 sheets	RW03	LLW Disposal
Plastic sheeting	RW04	LLW Disposal
Plastic pipes	RW05	LLW Disposal
Assorted metal piping, fence posts etc.	RW06	LLW Disposal
Retrieval operational waste (PPE ,etc.)	RW07	LLW Disposal
Retrieval core sample residues	RW08	Mix & Repack
WMF-634 HEPA filters	RW09	Supercompactor
Soil Generated During Retrieval Operations	RW10	Mix & Repack
Analytical Samples		
Retrieval core samples to lab	AS01	Laboratory
SCW samples to lab	AS02	Laboratory
Supercompactor squeezant samples to lab	AS03	Laboratory

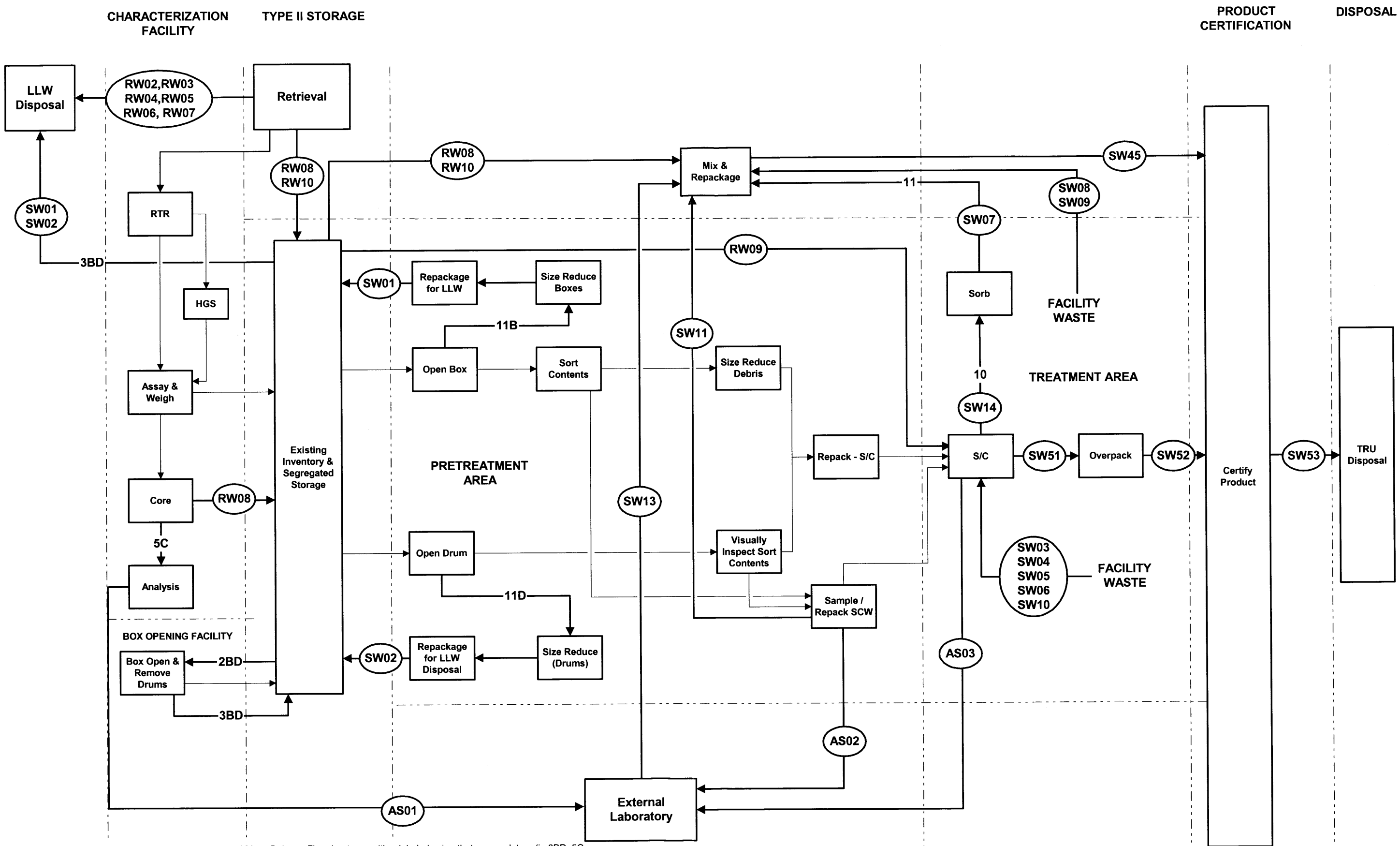

Note: Streams that are identical with the AMWTP Volume and Mass Balance Flowsheets are either labeled using that nomenclature (ie 3BD, 5C 11B, 11D) or have duplicate labels (ie SW14 & 10 and SW07 & 11)