SECTION C

ATTACHMENT C-A-C

Casks to be Handled in the Facility
And
Typical cask Handling Rigging

Table- Casks to be Handled at the Facility, dated August 17, 1999

Shipping Cask	Outside dimensions	Inside dimensions	Empty Weight (without external Impact Limiters)[6]	Payload[6]	Total Weight (Gross, without external Impact Limiters)[6]
High Load	35-in. sq.[1] x 69-in. high	13.5-in. sq.[2] x 51.5-in. high	27,250 lb.	775 lb.	28,025 lb.
ATR	35-in. dia. x 74-in. high	12.8-in dia. x 52.5-in. high	26,000 lb.	3,000 lb.	29,000 lb.
Ft. St Vrain TN-FSV	31-in. dia x 207-in. high	18-in dia. x 199-in. high	42,000 lb.	5,000 lb.	47,000 lb.
Peach Bottom (PB-02) CA-SF-005	42.62-in dia. X 173.12-in. high	26-in dia. x 159-in. high	57,510 lb.	10,000 lb.	67,510 lb.
Peach Bottom (PB-01) CA-SF-006	42.62-in dia. X 173.12-in. high	26-in dia. x 159-in. high	57,100 lb.	10,000 lb.	67,100 lb.
TN-BRP	83.24-in dia. X 190.5-in. high	64-in dia. x 171-in. high	173,750 lb.	41,250 lb.	215,000 lb.
TN-REG	90.25-in dia. X 180-in. high	71.75-in dia. x 163.25-in. high	174,500 lb.	50,500 lb.	225,000 lb.
NAC-LWT	44.2-in dia. x 19.8-in. high	13.38-in dia. x 180.90-in. high	48,000 lb.	4,000 lb.	52,000 lb.
NLI-1/2	47.13-in dia. X 195.25-in. high	13.38-in dia. x 178-in. high	43,250 lb.	3,000 lb.	46,250 lb.
GE-2000	38.5-in dia. x 71-in. high	26.5-in dia. x 54-in. high	28,100 lb.	5,450 lb.	33,550 lb.
IU-04	35.45-in dia. X 96.50-in. high	31.30-in dia. x 37.80-in. high	Not Available		45,253 lb.
HFEF-6	32.75-in dia. X 92-in. high	6-in dia. x 67.38-in. high	26,226 lb.	2,004 lb.	28,230 lb.
NFS 100	70.25-in dia. X 128.31-in. high	40-in dia. x 103-in. high	50 tons	10 tons	60 tons
NRF-Large Cell	81.50-in dia. X 165.50-in. high	55.50-in dia. x 139-in. high	153,600 lb.	66,400 lb.	220,000 lb.
GNS CASTOR V/21	96-in. dia x 192 in. high	60-in dia. x 163 in. high	102 tons	15 tons	117 tons

Table- Casks to be Handled at the Facility, dated August 17, 1999

Transnuclear TN-24P	90-in. dia x 200 in. high	57.5-in dia. x 166 in. high	82.3 tons	17.7 tons	100 tons
Westinghouse MC-10	88-in. dia x 182 in. high	68.5-in dia. x 162 in. high	102.8 tons	17 tons	119.8 tons
Pacific Sierra Nuclear VSC-17	105-in. dia x 209 in. high	51.5-in dia. x 161 in. high	162,000 lb.	Not Available	
Ridihalgh Eggers/Assoc. REA 2023	96-in. dia x 192 in. high	61-in dia. x 181 in. high	84 tons	14 tons	98 tons
NUHOMS OS-197	85-in dia. x 207-in high	68-in dia. x 197-in. high	55 tons	36 tons	91 tons
NUHOMS MP-187	93-in dia. x 202-in. high	68-in dia. x 187-in. high	80 tons	40 tons	120 tons
Proposed Large Naval Cask[4]	90-in dia. x 225-in high[3]	Not Available	81 tons	49 tons	130 tons
Proposed Repository Transportation Cask	2.181 m dia x 5.535 m high (approx. 86-in dia. x 218-in high)	Not Available	120 tons	30 tons	150 tons[5]

1 This cask is square on end with outside dimensions of 35-in x 35-in.
2 This cask is square on end with inside dimensions of 13.5-in x 13.5-in.
3 With trunnions and impact limiters, the estimated maximum dimensions are: 128-in dia x 308-in high.
4. The Naval Dual-Purpose Canister Transportation Cask.
5. The fully loaded transport vehicle, with cradle, impact limiters, trunnions and loaded cask is estimated at a maximum of 200 tons.
6. All weights are in US tons or pounds.

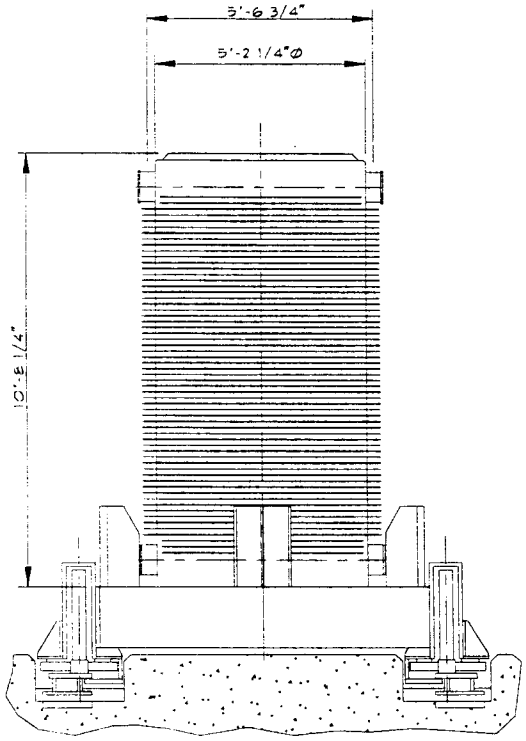

NFS 100 CASK

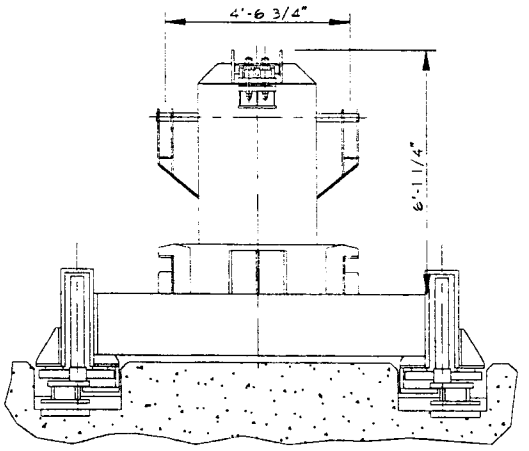

HIGH LOAD CHARGER CASK

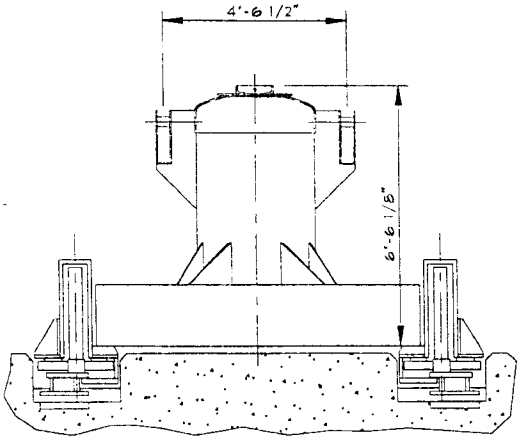

ATR SPENT FUEL TRANSFER CASK

FIGURE 1: NFS 100, HIGH LOAD CHARGER, AND ATR SPENT FUEL CASK SKETCHES

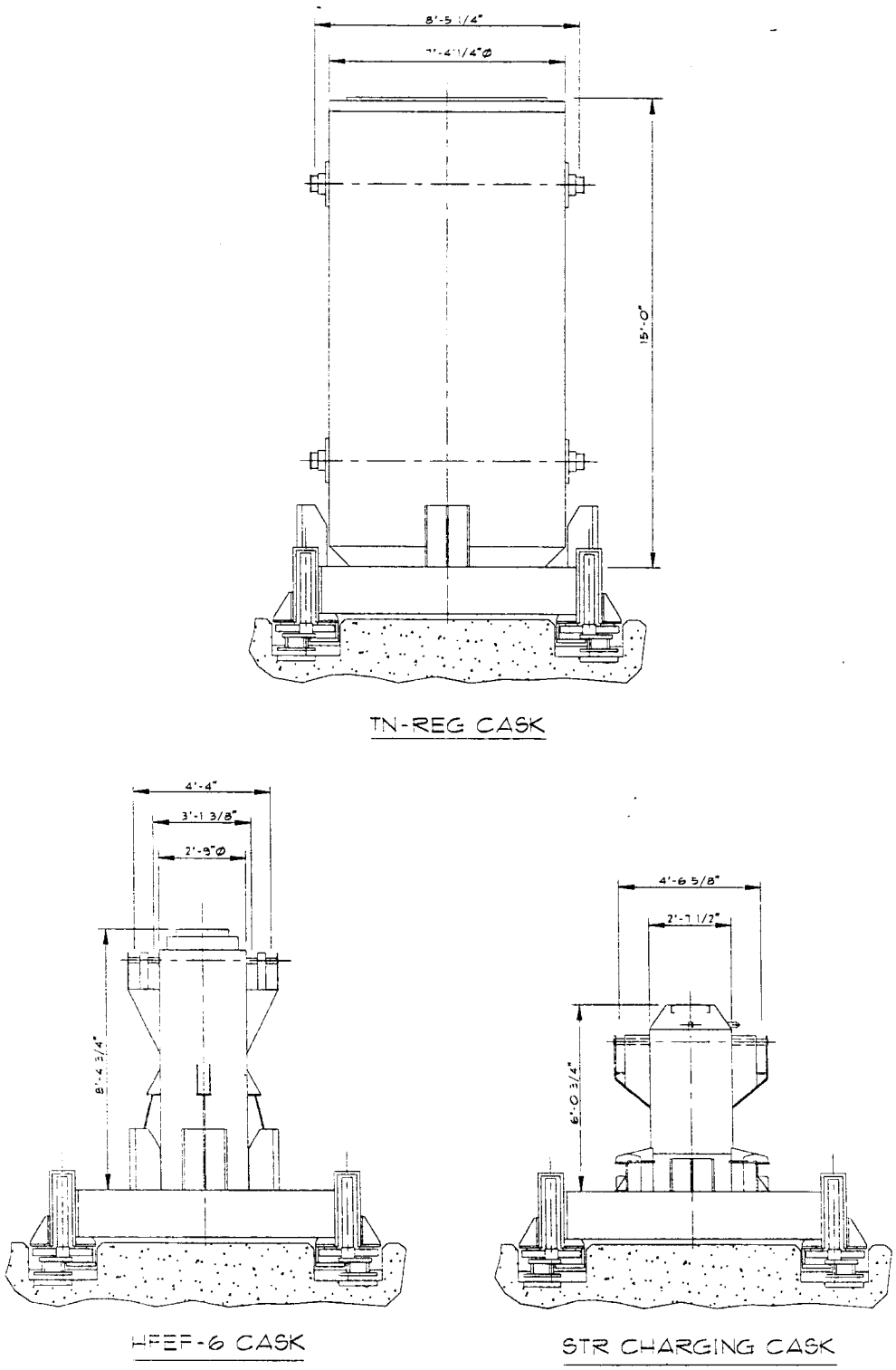

FIGURE 2: HFEF-6 AND STR CHARGING CASK SKETCHES

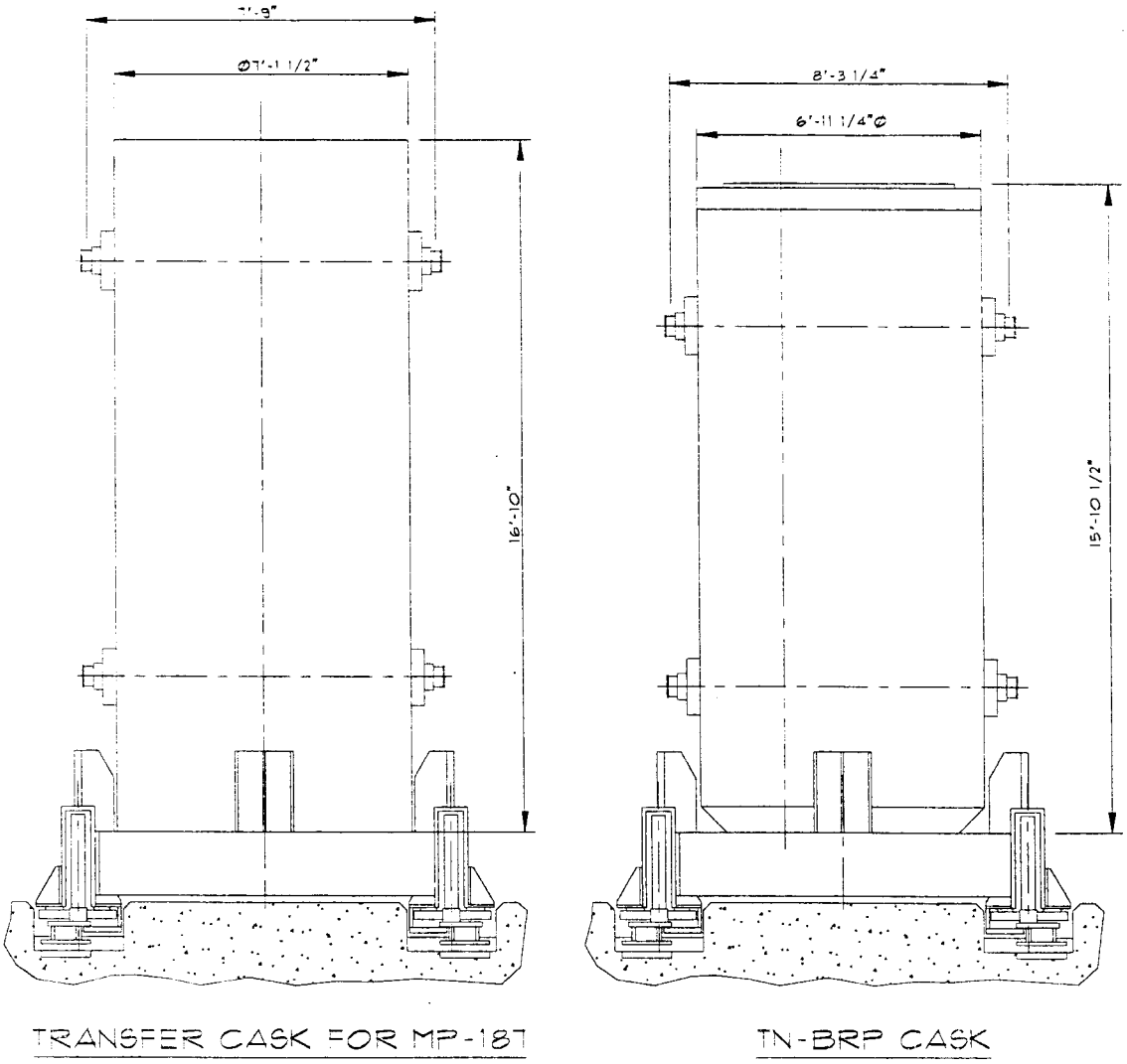

FIGURE 3: MP-187 AND TN-BRP CASK SKETCHES

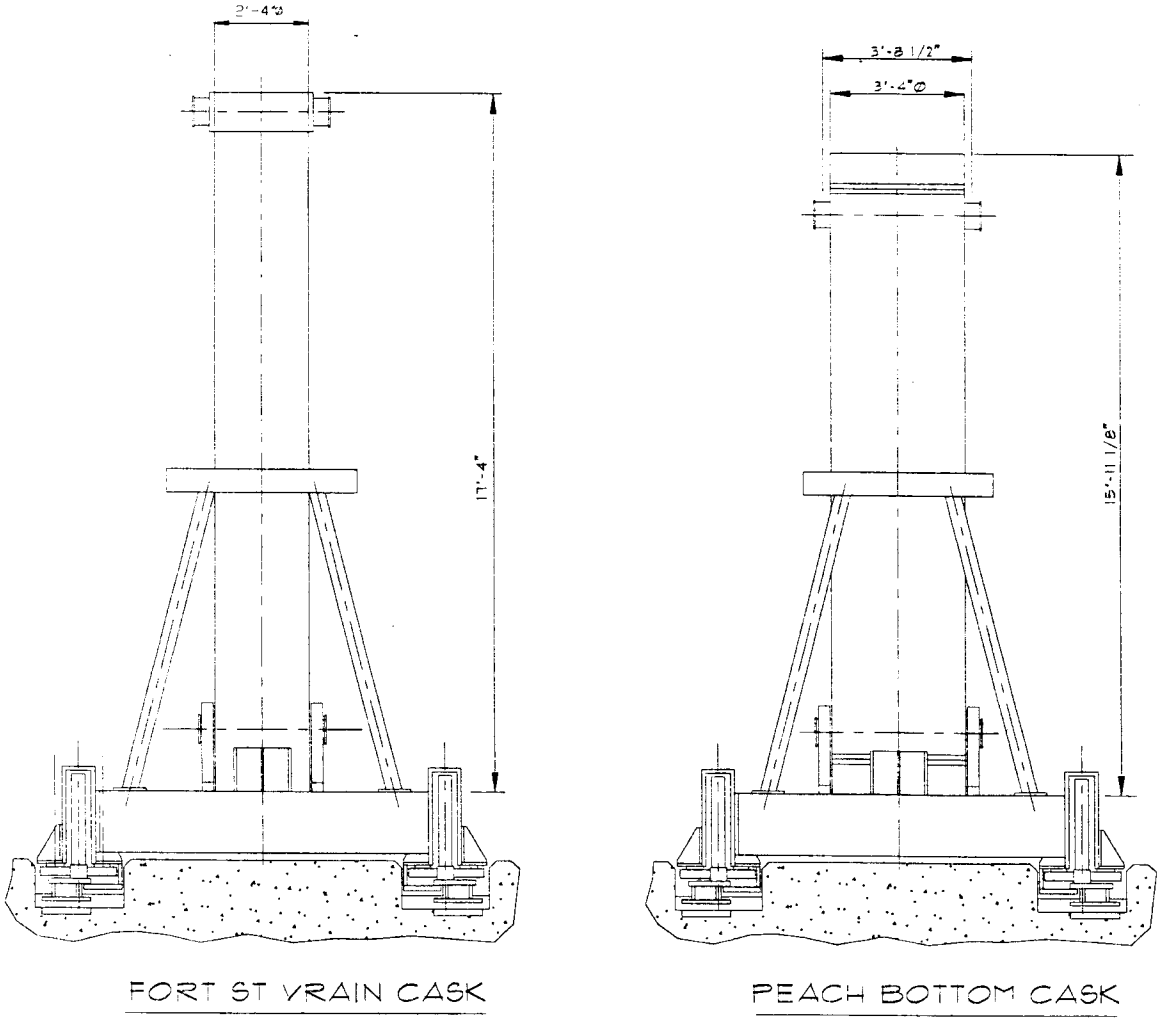

FIGURE 4: FORT ST VRAIN AND PEACH BOTTOM CASK SKETCHES

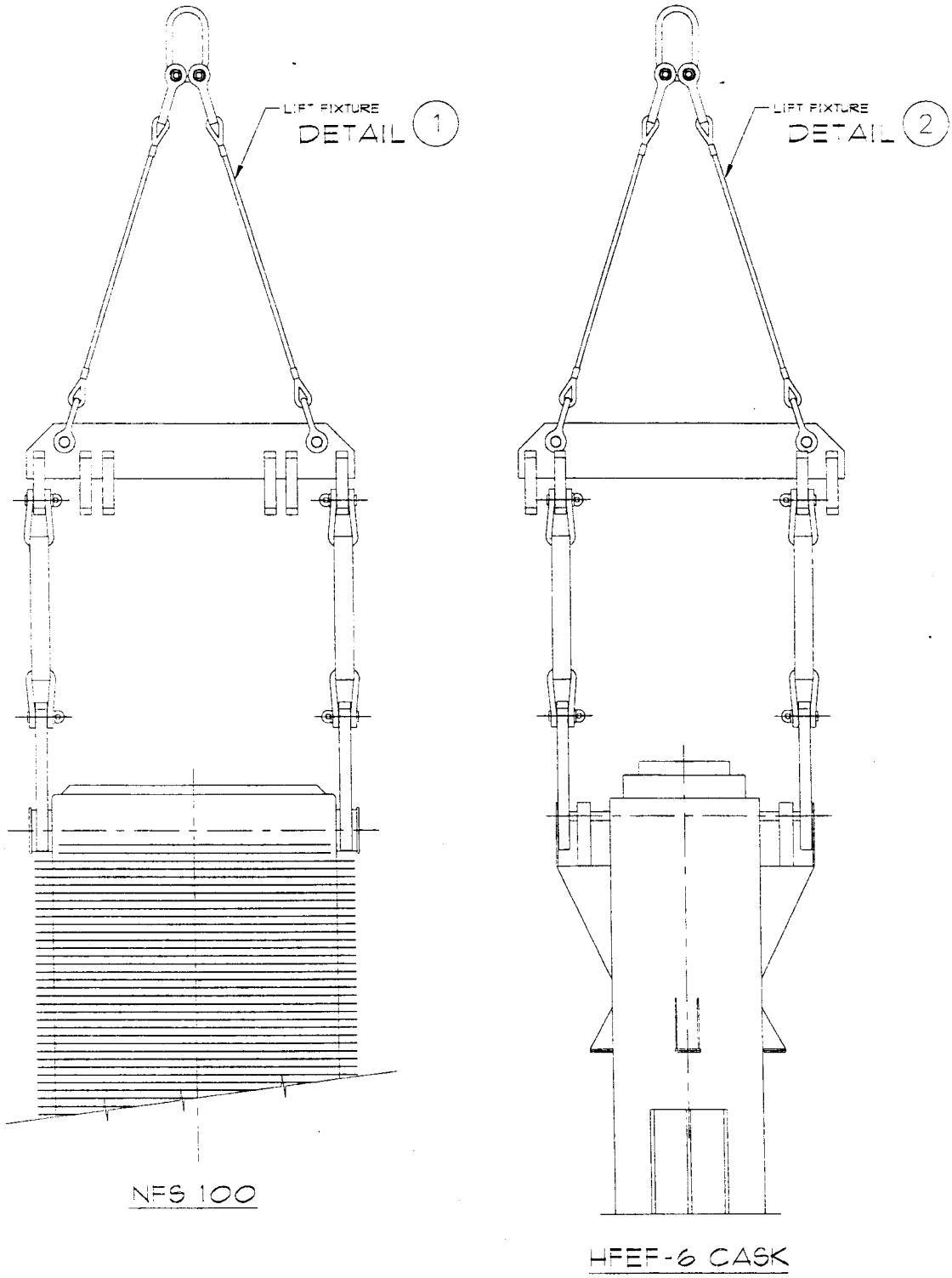

FIGURE 5: NFS 100 & HFEF-6 TYPICAL CASK LIFT FIXTURES

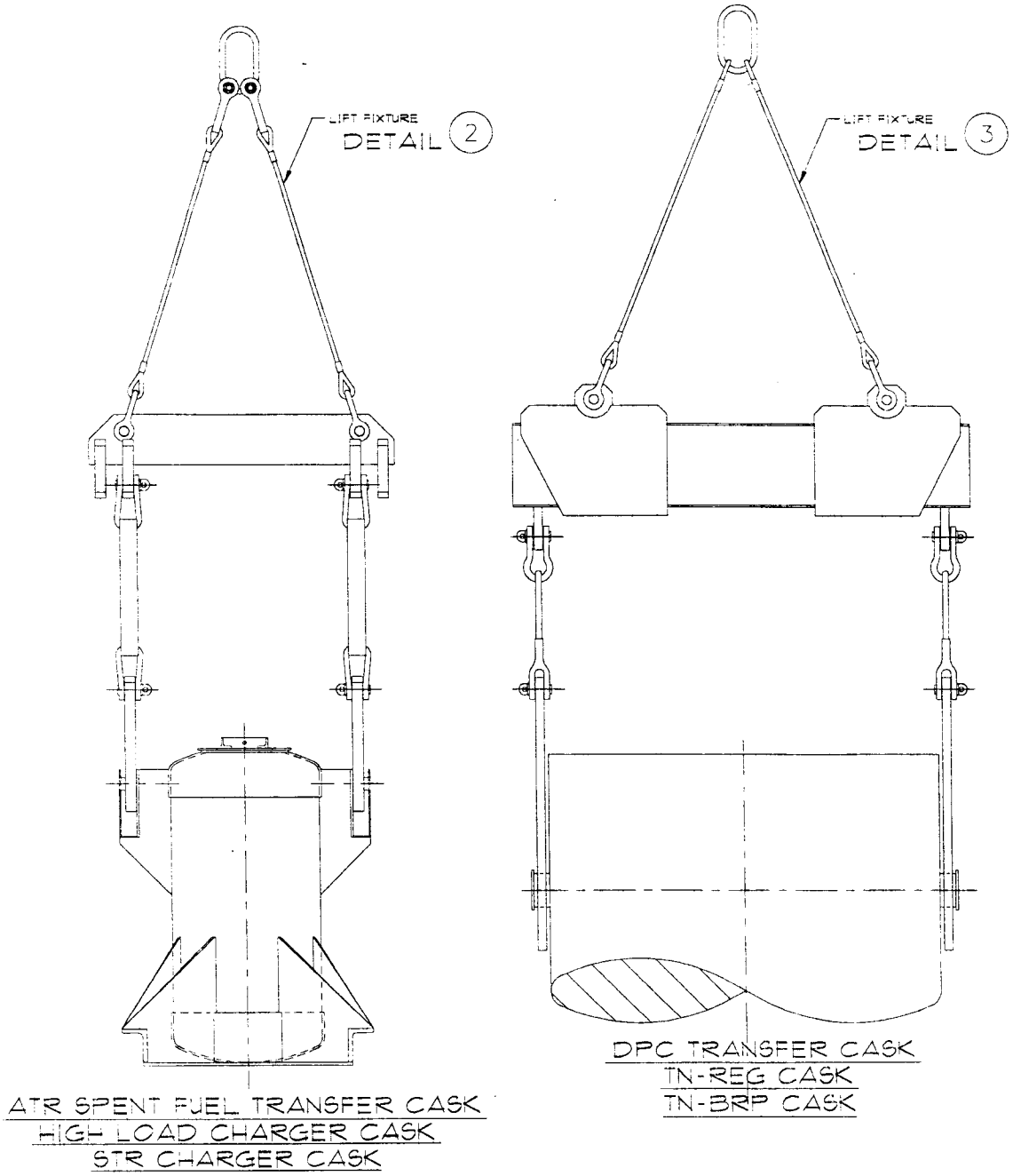

FIGURE 6: ATR, DPC, TN-REG & TN-BRP TYPICAL CASK LIFTING FIXTURES

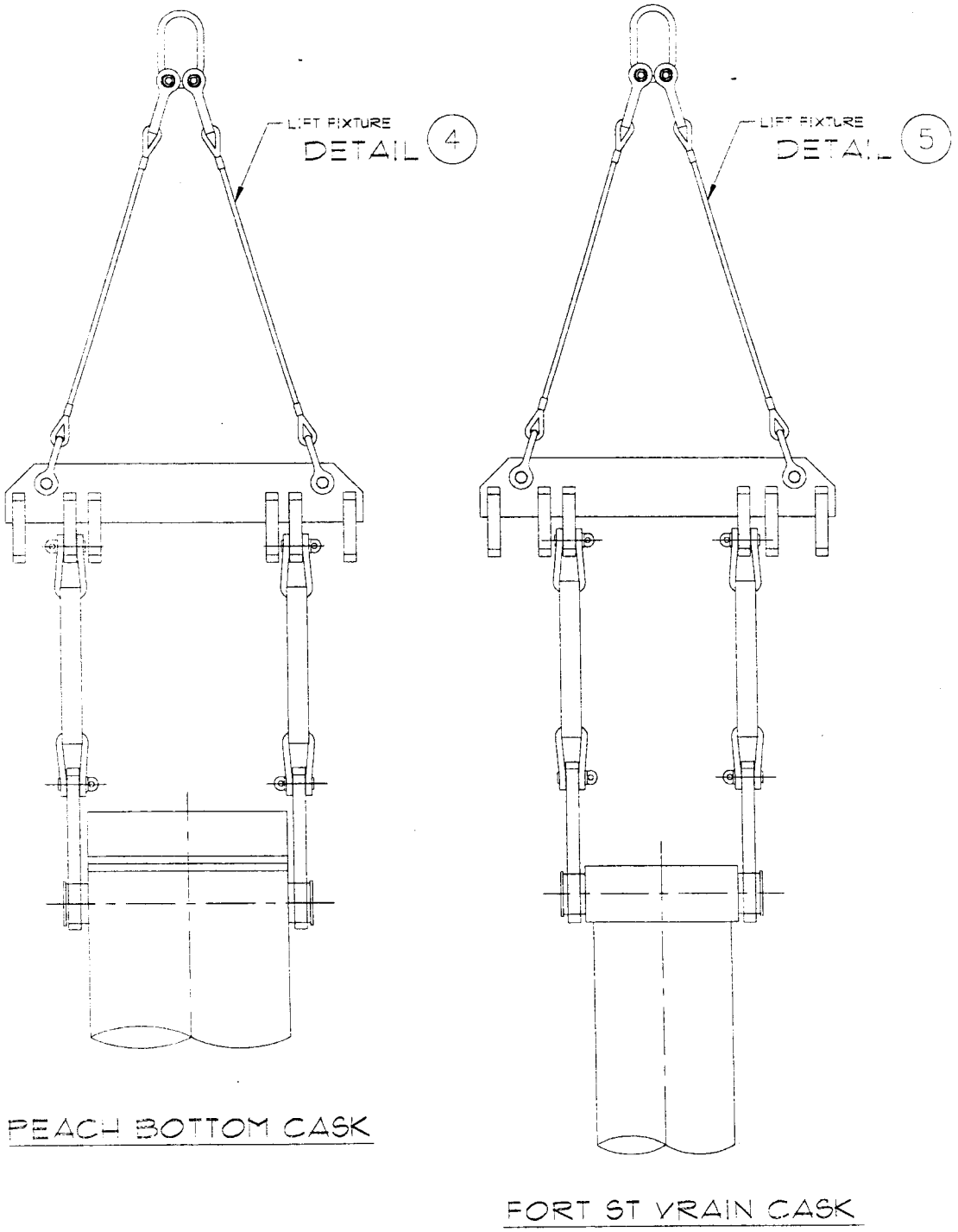

FIGURE 7: PEACH BOTTOM AND FORT ST VRAIN TYPICAL CASK LIFT FIXTURES

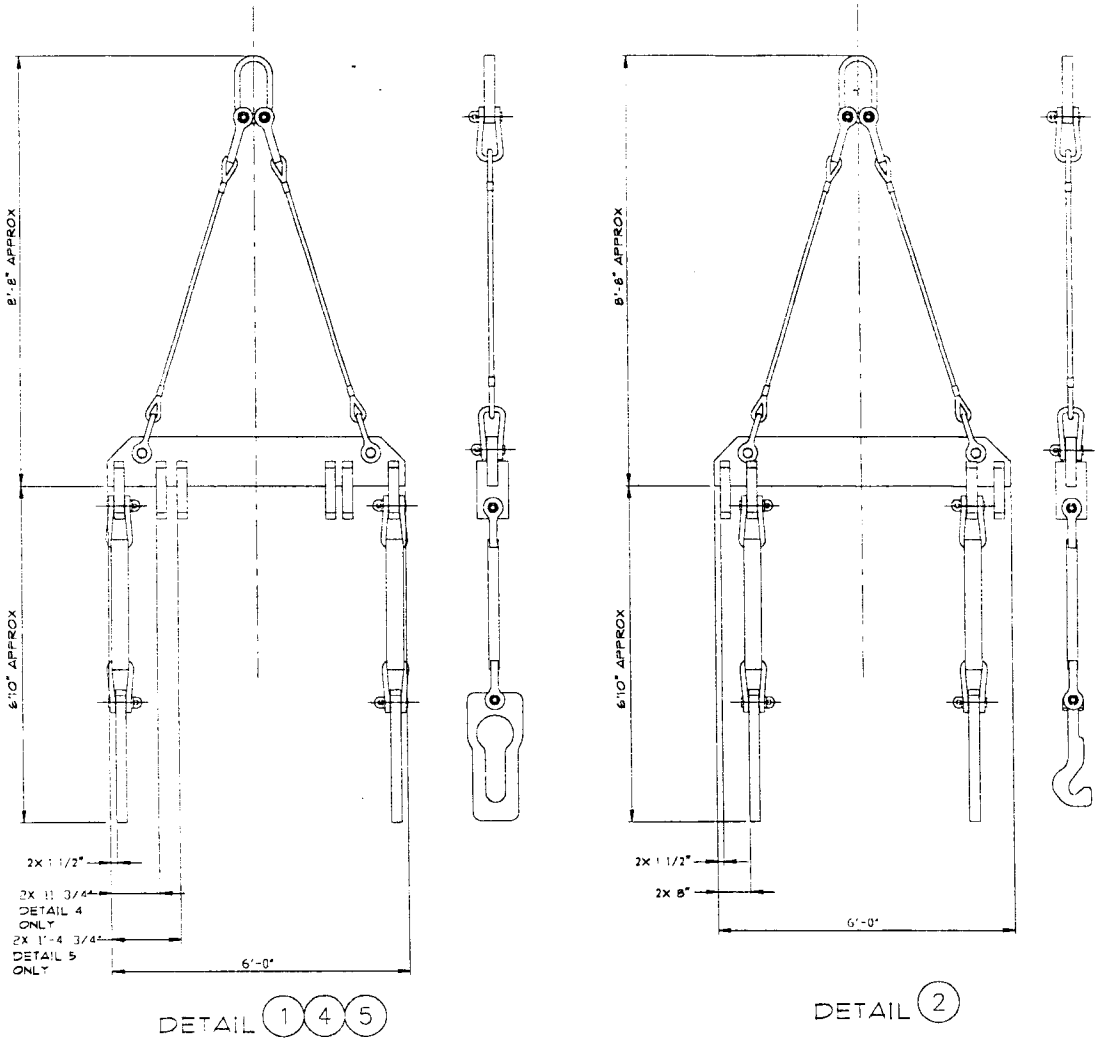

FIGURE 8: TYPICAL CASK LIFTING FIXTURES

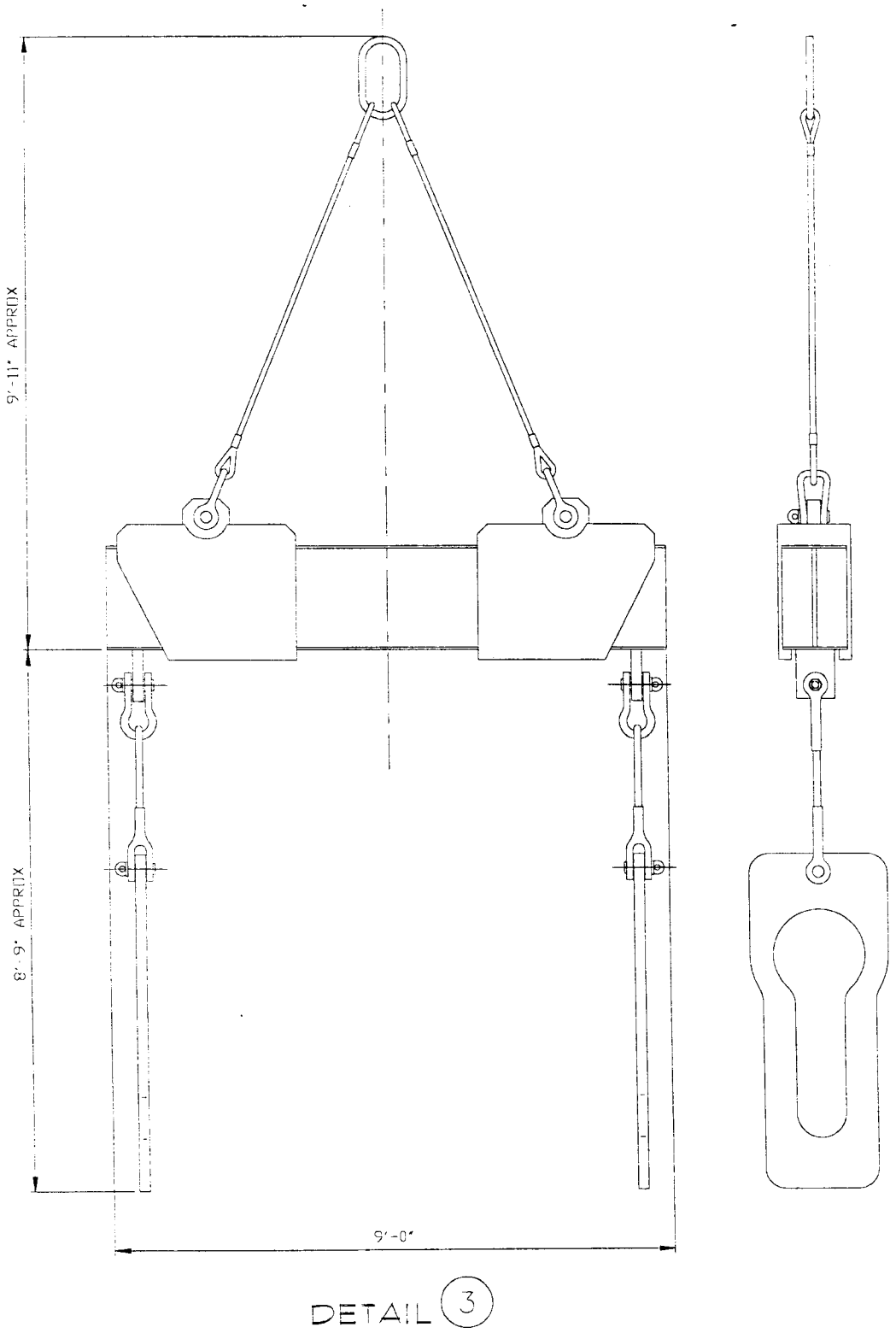

FIGURE 9: TYPICAL LIFT FIXTURE