Document ID: PSD 4.7
Revision ID: 5
Effective Date: 09/29/03

Plant Safety Document

for the

Section 4.7

Underground Fuel Storage

Prepared for:
U.S. Department of Energy
Idaho Operations Office
Idaho Falls, Idaho

Idaho National Engineering
and Environmental Laboratory

Form 412.14
04/03/2003
Rev. 04

REVISION LOG

Rev.	Date	Affected Pages	Revision Description
5	08/03	All	E. D. Sellers, letter to R. R. Chase, "NE-ID Approval of Safety Documentation for the Receipt of Oak Ridge Spent Fuel Shipments 4 and 5 (INTEC-SNF-03-054)," CCN 44700, August 28, 2003
4	10/02	Rev. Log, 8,24,25,37, 38	W.E. Bergholz, Jr. letter to R. R. Chase, "DOE-ID Approval of CPP-749 Safety Document Revisions Involving Vault Lid Closure (INTEC-SNF-02-079)," October 8, 2002
3	03/00	All	See DAR # 42934
2	06/99	All	Descriptive changes. See DAR # 98-11-04.
1	08/90	All	Approved as amended by DOE-ID: A. A. Pitrolo, letter to W. C. Moffitt, "Fuel Storage Safety Document Revision Requests," August 3, 1990.
0		All	

CONTENTS

4.7 UNDERGROUND FUEL STORAGE 1

4.7.1 Process Theory 1
4.7.2 Description of the Receipt and Storage of the Peach Bottom and Fermi Fuel 3
4.7.3 Process Description 3
4.7.4 Process Design and Equipment 6
4.7.5 Interconnections 23
4.7.6 Control Methods and Procedures 23
4.7.7 Safety Evaluation 25
4.7.8 Engineered Safety Features 33
4.7.9 Administrative Controls 34
4.7.10 Safety Analysis Report Assumptions for PSD 4.7, Underground Fuel Storage 36
4.7.11 References 38

FIGURES

4.7-1. CPP-749 Underground Fuel Storage Area 2

4.7-2. Cathodic Protection System 7

4.7-3. Peach Bottom-Fermi First-Generation Fuel Storage Vault 9

4.7-4. CPP-749 Second-Generation Storage Vault 10

4.7-5. New Centering Device 11

4.7-6. Peach Bottom Basket Modification 13

4.7-7. Cross-section of Peach Bottom Fuel Basket 15

4.7-8. Peach Bottom Fuel Element 17

4.7-9. Fermi I Radial Blanket Subassembly 19

4.7-10. Fermi I Axial Blanket Subassembly 20

TABLES

4.7-1. Heavy Metal Content of Peach Bottom I Core 1 Fuel 18

4.7-2. Calculated Activity of Fermi I Blanket in Curies 21

4.7-3. Criticality Calculations for Underground Fuel Storage 26

4.7-4. Direct Gamma Exposure from Peach Bottom Movements 28

4.7-5. Postulated Abnormal Occurrences for Underground Fuel Storage..... 31

4.7 UNDERGROUND FUEL STORAGE

An underground dry fuel storage facility (CPP-749) has been constructed at the Idaho Nuclear Technology and Engineering Center (INTEC), previously known as the Idaho Chemical Processing Plant (ICPP), to (1) meet indefinite storage requirements while providing for eventual retrieval and (2) provide proper storage for chemically reactive fuel. The CPP-749 facility, as shown in Figure 4.7-1, consists of 47 Peach Bottom; 14 Fermi; 21 unirradiated LWBR 12 in. and one 30 in.; and 135 second-generation 30-in. storage vaults for irradiated fuel storage.

Irradiated Peach Bottom I Core 1 fuel has been stored in the facility since September 1971 and the irradiated Fermi I Blanket subassemblies have been stored since January 1975. The safety analyses for Peach Bottom and Fermi fuels in first-generation vaults and for LWBR storage in second-generation storage vaults envelope the storage of Peach Bottom and Fermi fuels in second-generation vaults.

This PSD describes the handling and dry storage of Peach Bottom and Fermi fuels. Descriptions of the handling and storage of LWBR fuels, and of the second-generation storage vaults, are contained in WIN-136, "Final Safety Analysis Report, Storage of Unirradiated and Irradiated Light Water Breeder Reactor Fuel in Underground Dry Wells at ICPP,"[1] Addendum A to this PSD section.

The following topics are discussed in this PSD: (1) process theory, (2) process description, (3) process design and equipment, (4) interconnections, (5) control methods and procedures, (6) safety evaluation, and (7) engineered safety features.

4.7.1 Process Theory

The current INTEC mission is to receive and store U.S. Department of Energy (DOE) assigned nuclear fuels; prepare high level liquid and solid waste for disposition in a permanent repository; develop technologies for the disposition of spent nuclear fuel, sodium-bearing waste, and high level waste; and develop and apply technologies to minimize waste generation and manage radioactive and hazardous wastes.

Most nuclear fuels delivered to the INTEC are stored underwater in the basin at CPP-666. Some fuels are stored dry in the CPP-603 Irradiated Fuel Storage Facility (IFSF). Peach Bottom and Fermi I Blanket fuel are stored underground at CPP-749. These two fuels were received before the IFSF was built and are not suited for underwater storage.

Peach Bottom I Core 1 fuel, from the first high-temperature gas-cooled reactor (HTGR), requires long-term dry storage for the following reasons. The fuel consists of thorium carbide and uranium carbide microspheres coated with pyrolytic carbon and dispersed in a graphite matrix. This fuel must be stored dry because the carbides will react if exposed to water[2,3] to form hydrocarbons (primarily methane and acetylene) and the metallic oxides of uranium and thorium. The reaction is relatively fast, and formation of the metallic oxides can result in increases up to 85% in the carbide volume in each element. To prevent a reaction with water, each element was sealed inside a fuel canister fabricated of Type 6061 aluminum. The canister was sealed with an aluminum cap and a double O-ring seal for temporary storage at the Peach Bottom reactor site. These fuel canisters could lose their sealing integrity within 1 to 10 years because of (1) corrosion of the canister in the fuel storage basin or (2) hardening of the O-ring

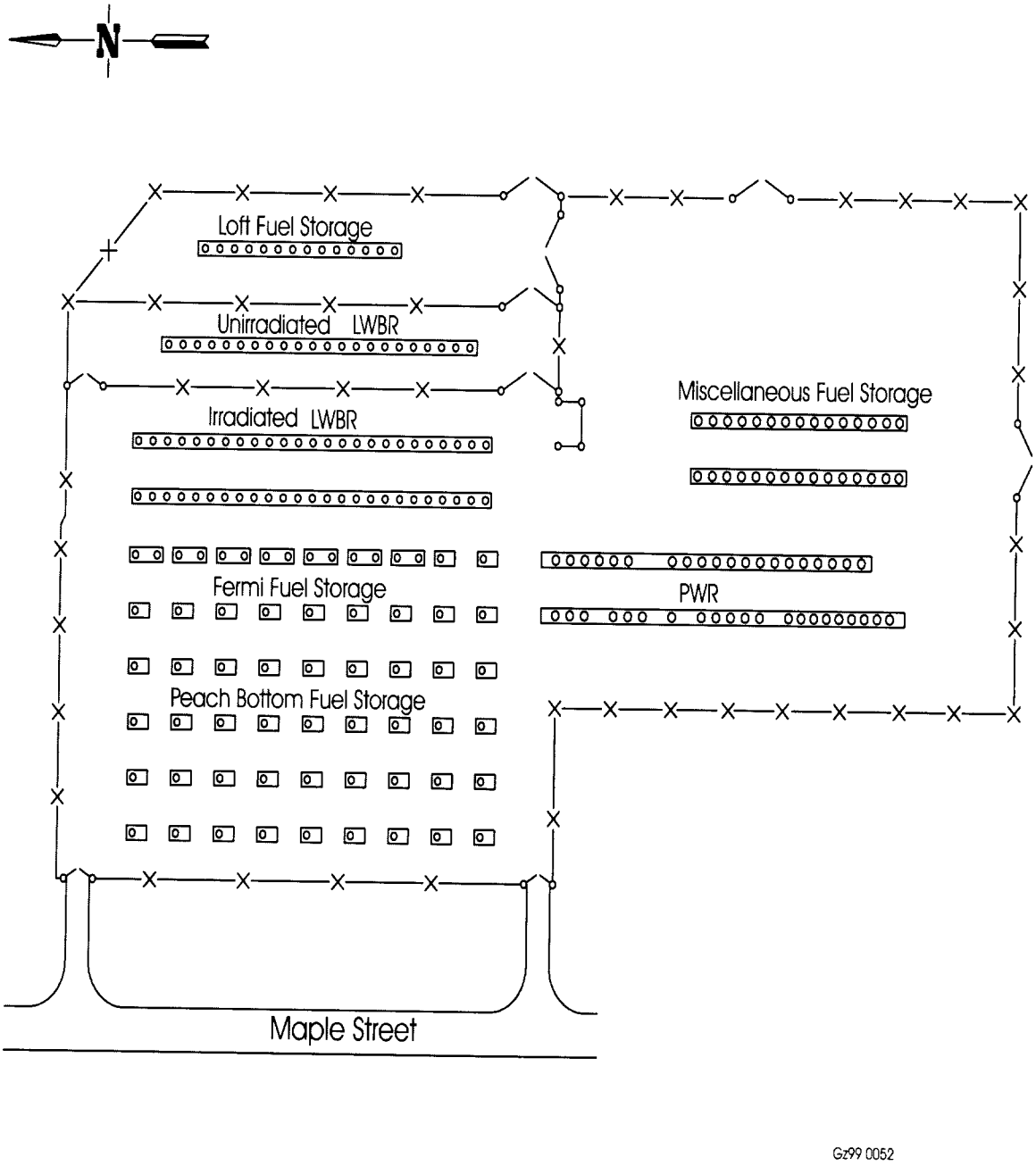

Figure 4.7-1. CPP-749 Underground Fuel Storage Area

seals. Leakage of water into the canisters and reaction with the carbides would release fission gases trapped within the fuel. In addition, if these canisters are stored underwater, the accompanying volume expansion as the carbides were converted to oxides could rupture the canisters and release fission products and heavy metals into the surrounding water. Therefore, dry storage in underground vaults was selected as the best method for long-term storage of Peach Bottom fuel at the INTEC. Fermi I Blanket fuel consists of a metallic alloy of U-238/3% Mo containing 0.1174% Pu-239. The fuel is clad with 0.010 in. thick Type 304 stainless steel. Although Fermi I Blanket fuel could have been safely stored underwater, the fuel was not expected to be processed in the near future, if ever, which made underwater storage undesirable. Storage in the IFSF was also undesirable because the fuel would occupy some 80 storage positions or approximately 12% of the total storage, again for a long period of time. Storage of this fuel at the Radioactive Waste Management Complex (RWMC) is impossible because high-level TRU waste cannot be received at the RWMC. Thus, long-term dry storage at CPP-749 was considered the best alternative.

A program of continuous monitoring and surveillance has been maintained at CPP-749 since 1975.

4.7.2 Description of the Receipt and Storage of the Peach Bottom and Fermi Fuel

This section provides a summary of how the Peach Bottom and Fermi fuel was received and stored in the vaults at CPP-749. The specific handling procedures of these two fuels are essentially the same. Upon arrival at the INTEC, the cask was checked for exterior contamination and radiation. A gas sample was drawn from the cask through a filter cartridge; any remaining pressure in the cask was vented through the filter cartridge to the off-gas system at CPP-603. A radiological control technician (RCT) checked the filter cartridge for activity. The gas sample and any particulate collected in the filter cartridge were analyzed to determine whether any fuel canisters had leaked. Since the canisters contain a helium atmosphere, any detectable helium would indicate leakage. Once it was determined that the shipping cask could be accepted, the storage vault designated to receive the fuel was prepared. Preparations included (1) removing the temporary cover, (2) inspecting the vault to ensure that it was dry, and (3) taking steps necessary to control any contamination from the interior of the cask or from the exterior surfaces of the basket and canisters.

After the truck was moved to the area and the vault prepared, the tiedowns were removed from the cask. A lifting yoke was connected to the top of the cask and a crane hook attached to the yoke. The cask was then lifted free of the truck and positioned on the support pedestal, where the cask bottom lid was removed. The cask was then placed onto a centering device (in this section it is the "old" centering device) over the vault. A lifting rod and crane were used to lower the fuel basket/canister into the vault. The cask was detached from the centering device. The bottom lid was reinstalled and the cask was placed back on the truck. The centering device was removed from over the vault and the concrete shield plug was reinstalled. The storage vault cover was then welded in place and the cathodic protection system connected.

Nine canisters containing a Peach Bottom I Core 2 fuel element will be received from Oak Ridge for storage in a second-generation vault.

4.7.3 Process Description

4.7.3.1 Retrieval of Peach Bottom and Fermi Fuel from a Storage Vault. This section provides a description of the retrieval of Peach Bottom or Fermi fuel from a storage vault.

Since 1989, studies have indicated that the Peach Bottom baskets stored in the first-generation vaults at CPP-749 are corroding.[4] Inspections of the baskets have shown corrosion deposits and pitting

around the bottom welds. The bottom welds are important since they support the fuel canisters in the basket. The integrity of these baskets is essential for recovery of the Peach Bottom fuel in a cost-effective manner. Inspections of the fuel canisters have shown corrosion deposits on the tops and sides of some canisters. These inspections have also shown streaking on the inner walls of some vaults, indicating condensation has occurred. Some of this condensate has collected in the bottom of the vaults, resulting in corrosion to the bottom welds of the baskets. For these reasons the Peach Bottom fuel will be relocated from first-generation vaults to second-generation vaults. During this relocation, a new support plate assembly and support rod will be installed on each basket.

Prior to opening a first-generation vault from which fuel will be transferred, the vault atmosphere is sampled for flammable gases. If the sample analysis indicates a combustible mixture or a potentially combustible mixture, the vault is purged with nitrogen until potential combustion is no longer a problem. If radioactive gases or contamination are detected, a recovery plan is developed and executed as described in section 4.7.6.3.

Prior to initiating cask handling operations the sustained wind speed must be less than 25 mph. If the sustained wind speed increases to greater than 25 mph after handling activities have started, operations will only continue until a safe stopping point is reached. Continuation of operations requires the approval from an area safety representative.[5]

After sampling (and purging if necessary) the vault cover is removed. For first-generation vaults, the covers were welded in place, so they must be ground off. Second-generation vaults are simply unbolted. The new centering device is then positioned over the vault. The new centering device and its operation are discussed in detail in Section 4.7.4.4. After the new centering device is placed over the vault, the shield plug is removed. The cask is then moved to the new centering device and placed on the centering ring and the tower gate is closed. The cask is lifted slightly so that the trunnion supports can be rotated into position. The cask is then placed onto the trunnion supports. The lifting table is raised into place under the cask and the bottom lid bolts are removed. The table with the cask lid is then lowered and moved from under the cask. The cask is then lifted slightly to allow the trunnion supports to be rotated out of the way. The cask is then lowered onto the centering ring. For Peach Bottom baskets that are being transferred from a first-generation to a second-generation vault, a new bottom support plate is placed on top of the bottom cask lid after the sliding table is moved from under the cask and the cask has been positioned on the centering ring.

After the cask has been lowered onto the centering ring, the small center plug is removed from the top cask lid and the appropriate lifting rod for the fuel type to be transferred is attached to the crane and lowered through the opening in the top cask lid. The lifting rod is then threaded into the hole in the top of the fuel storage basket, canister, or support rod (for modified Peach Bottom baskets). A remote camera is used to assist the personnel in connecting the lifting rod to the basket or canister. The fuel is then lifted out of the vault and into the cask. During the lifting operation, the weight of the load is monitored on a load cell to detect any binding or loss of load. For the transfer of Peach Bottom baskets from first-generation vaults, a camera is used to ensure all eighteen canisters in each basket are being lifted. With the fuel in the cask, the support collar is attached to the lower lift rod to hold the fuel in a fixed position. Collar placement ensures that the fuel is all the way inside the cask, without being forced up against the underside of the lid. The sliding table is raised into place under the cask and the bottom cask lid is bolted into place. The collar is removed and the fuel is then lowered until it rests on bottom cask lid. In the case of unmodified Peach Bottom baskets, the basket rests on the new support plate. The lower lifting rod is then detached from the fuel. For unmodified Peach Bottom baskets, a new support rod is then inserted through the top cask lid, through the center position of the basket, to the new support plate where it is threaded and torqued into place. The center plug is reinstalled in the top cask lid to allow for cask transport.

The cask is then removed from the new centering device and transferred to the cask trailer. The lower cask trunnions are positioned into the trailer rear trunnion support. The cask is lowered so that the upper end of the cask rests on the cask saddle (SADL-DSW-900). The cask lifting yoke is removed. Using slings, the upper end of the cask is raised and the cask saddle is removed. The cask is lowered into the trailer trunnion supports. The remaining four bolts are put in place in the bottom cask lid, so that the lid is attached to the cask with eight bolts. The bolts are torqued and the cask trunnion blocks are installed. The loaded cask is now ready for transport to the selected vault for unloading. Impact limiters are not installed for transport within CPP-749.

4.7.3.2 Fuel Placement into a Storage Vault. For second-generation vaults, the sump is emptied to remove any liquid. The vault cover is then removed. The new centering device is then placed over the vault and the shield plug is removed. The vault is inspected for water and debris.

The truck and trailer are positioned in the proximity of the storage vault. The Peach Bottom cask, on the cask trailer, must also be prepared. The cask impact limiters are removed. Four of the eight bolts on the bottom cask lid are removed. Each of the four removed bolts is separated by 90 degrees.

The trunnion support tie-downs are removed. Using slings, the upper end of the cask is raised, the cask saddle positioned beneath the cask, and the cask is lowered onto the saddle. The Peach Bottom lifting yoke is then attached to the crane and cask. The crane lifts the cask from the trailer and moves it to the new centering device where it is lowered onto the centering ring and the tower gate is closed. The center plug in the top cask lid is removed. The appropriate lower lifting rod is inserted through the opening and threaded into the canister or support rod. The support collar is installed and the cask is raised slightly so the trunnion supports can be rotated into position. The cask is then lowered onto the supports. The cask bottom lid is removed as described in Section 4.7.3.1. The cask is then lowered onto the centering ring.

The crane is detached from the lifting yoke. The upper lifting rod is attached to the crane and also to the lower lifting rod. The fuel is raised slightly so that the support collar can be removed. The fuel is then lowered into the vault. During the lowering process, the crane load cell is monitored to detect any binding or hang-up of the fuel. When the fuel is resting on the bottom of the vault, the lifting rod is disconnected and removed from the vault and cask. The center plug on the top cask lid is replaced and the bottom cask lid is installed. The cask is then returned to the trailer. The shield plug and vault cover are replaced. A copy of each fuel transfer record is given to the Fuel Receipt Coordinator (FRCo). This copy of the record is used to update the computerized inventory. Fuel stored in the CPP-749 storage area is identified in the fuel inventory by core name, fuel configuration, and basket or can number, as available, for each storage vault. For modified Peach Bottom baskets, the support plate ID number becomes the new FHU ID number.

4.7.3.3 Visual Inspection of Storage Vault. Visual inspections of individual vaults and/or the stored fuel are performed periodically. The vault cover is removed and the shield plug is lifted out of place. A shielded cover (cap) with inspection ports is then installed over the vault opening. A remote camera is used for the inspection of the fuel and/or vault. Once the inspection has been completed, the shield plug and vault cover are replaced.

4.7.4 Process Design and Equipment

4.7.4.1 Facility Description. The fuel storage area is located within the confines of the INTEC security fence and north of CPP-603. The storage facility covers an area approximately 400 ft by 600 ft as shown in Figure 4.7-1. Within that area are 47 storage vaults spaced on 30-ft centers in a square array used for Peach Bottom fuel. Fourteen storage vaults spaced on 15-ft centers are used for Fermi I Blanket fuel. The second-generation storage vaults are in rows 30-ft apart, with vaults located on 10-ft centers. These vaults are located east and south of the Peach Bottom/Fermi vaults.

The area is sloped for drainage and is graded and filled to a height of 1.0 to 1.7 ft above natural ground level with crushed rock and gravel. The surface, gravel in the Peach Bottom/Fermi area and paved in the other areas, is suitable for bearing the cranes used to handle the cask and fuel and the truck-trailer unit used to haul the cask, as long as the load is no more than 50,000 lbs. per tire.[6] Other heavy equipment used in CPP-749 is bound by the same load and distance requirements. Access roads suitable for all-season use are also provided.

4.7.4.2 Cathodic Protection System. Each vault at CPP-749 is connected to the cathodic protection system, installed to minimize external underground corrosion of the metal vaults. The system prevents or slows corrosion caused by the underground contact of the metal casings with the soil or by stray current in the area. The cathodic protection system is shown in Figure 4.7-2.

The cathodic protection system consists of 21 Duriron anodes embedded in coke breeze to extend the anode life. The anodes are operated from the positive side of the 80V DC, 42 amp rectifier. Each individual metal vault is connected to the negative side of the rectifier. The vault is also connected to the neighboring pipes that are cathodically protected to avoid stray current from the other INTEC rectifier systems during an outage of one of the cathodic protection systems.

Cathodic protection levels are difficult to determine for vertical structures because of the variations in soil conditions from the top to the bottom of the vault. For this reason, a permanent reference electrode was centrally installed, at a depth equal to that at the bottom of the vault, to permit more accurate pipe-to-soil measurements at the lower levels of the vaults. Normal potential measurements are also taken using a portable reference electrode at the surface of the area. To examine the status of the cathodic protection system, the power outputs of all INTEC rectifiers are synchronized to "3 seconds off/ 12 seconds on" using interrupters on the rectifiers. Any shift toward the positive direction (i.e., less negative) is an indication of stray current, probably due to loss of bonding. A minimum of 0.85V negative vs. the copper/copper sulfate electrode is indication of full protection on the metallic vault structures.

As previously described when Peach Bottom fuel is transferred from first-generation storage vaults, the new centering device is placed over the vault. This placement interferes with and could damage the cathodic protection system wires. It is necessary to turn the CPP-749 cathodic protection system rectifiers off and disconnect the wires on each first-generation vault containing Peach Bottom fuel prior to installing the centering device. This configuration is allowed for up to 6 months. The wires are reconnected, and the rectifier turned on, when the fuel transfers have been completed or suspended for a significant period of time.[7]

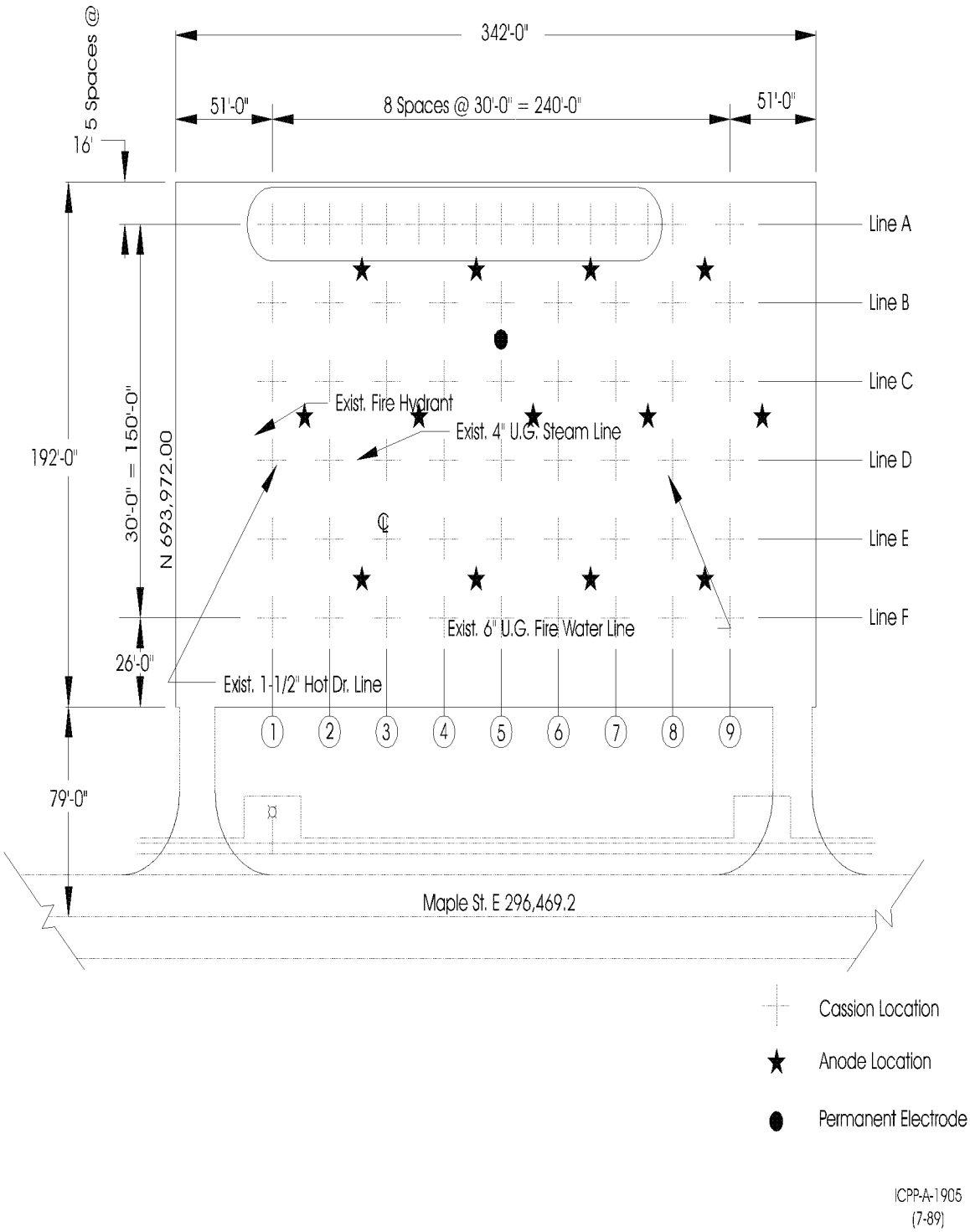

Figure 4.7-2. Cathodic Protection System

4.7.4.3 Storage Vaults. The vaults originally used to store Peach Bottom I Core 1 fuel and Fermi I Blanket fuel (first-generation) are similar. Each Peach Bottom storage vault is approximately 20 ft deep by 30 in. in diameter (see Figure 4.7-3). The vaults are lined with carbon steel casing with 2 ft of cement grout at the bottom to seal the vault and provide a base for the fuel. A reinforced concrete pad 8 ft by 14 ft by 1 ft thick is poured around the top of each vault to provide a flat working surface. The casing for each vault extends 6 in. above the concrete pad. After the fuel is inserted into the vaults, top shielding is provided by an off-set, 4 ft thick concrete plug. The storage vaults are sealed for containment, security, and inventory control of the spent fuel by welding a steel plate on the top of the vault.

Monitoring of each first-generation vault is possible through a small hole in the steel cover. A conduit through the concrete shield plug allows insertion of instrument probes into the vaults. Both the port in the steel cover and the conduit remain capped except when samples or data are being collected. Three vaults are also equipped with conduits for monitoring vault wall temperatures. An empty (spare) vault is maintained should an emergency pertaining to either a vault or its contained fuel require the fuel be transferred to the spare vault.

Each Fermi I Blanket fuel storage vault (Figure 4.7-3) consists of a 30 in. diameter carbon steel pipe 21 ft 6 in. long with a 2 ft thick expanding type grout plug as a seal at the bottom. A 2 ft long concrete plug resting in a 5 ft length of 36 in. diameter pipe serves as a shielding plug for the top. This 36-in. pipe will have a steelplate welded on the top to form the upper seal after the fuel is inserted.

Second-Generation vaults (see Figure 4.7-4) are dimensionally similar to the first-generation vaults. The important differences are as follows:

1. The bottom of the vaults is made by welding a plate to the end of the pipe casing instead of being grouted.

2. The joint where the 36 inch and 30 inch casings overlap is welded instead of grouted.

3. The top cover is bolted in place after the vault is loaded with fuel, not welded in place.

4. Sampling and monitoring capabilities are increased via a sample line from a sump at the bottom of the vault and a vent valve at the top.

5. The entire vault casing is grouted in place to provide isolation of the casing from the soil for improved corrosion protection.

6. The concrete shielding plug is 3 ft 8 in. thick.

The second-generation storage vaults used for irradiated LWBR storage are described in PSD 4.7-Addendum A. The other second-generation vaults are located east and south of the LWBR area.

4.7.4.4 New Centering Device. The new centering device (CA-SFE-911) supports the cask while it is positioned above the vault and provides the interface between the vault and the cask. It replaced the old centering device. The design of the new centering device eliminates transferring the cask, without the bottom lid, between the support pedestal and centering device. It also provides for better containment and better support for the cask while on top of the vault. The new centering device allows the shield plug to be removed and installed with the centering device in place over the vault. It also allows for removal and installation of the bottom cask lid with the cask on the centering device trunnion blocks. The new centering device is shown in Figure 4.7-5.

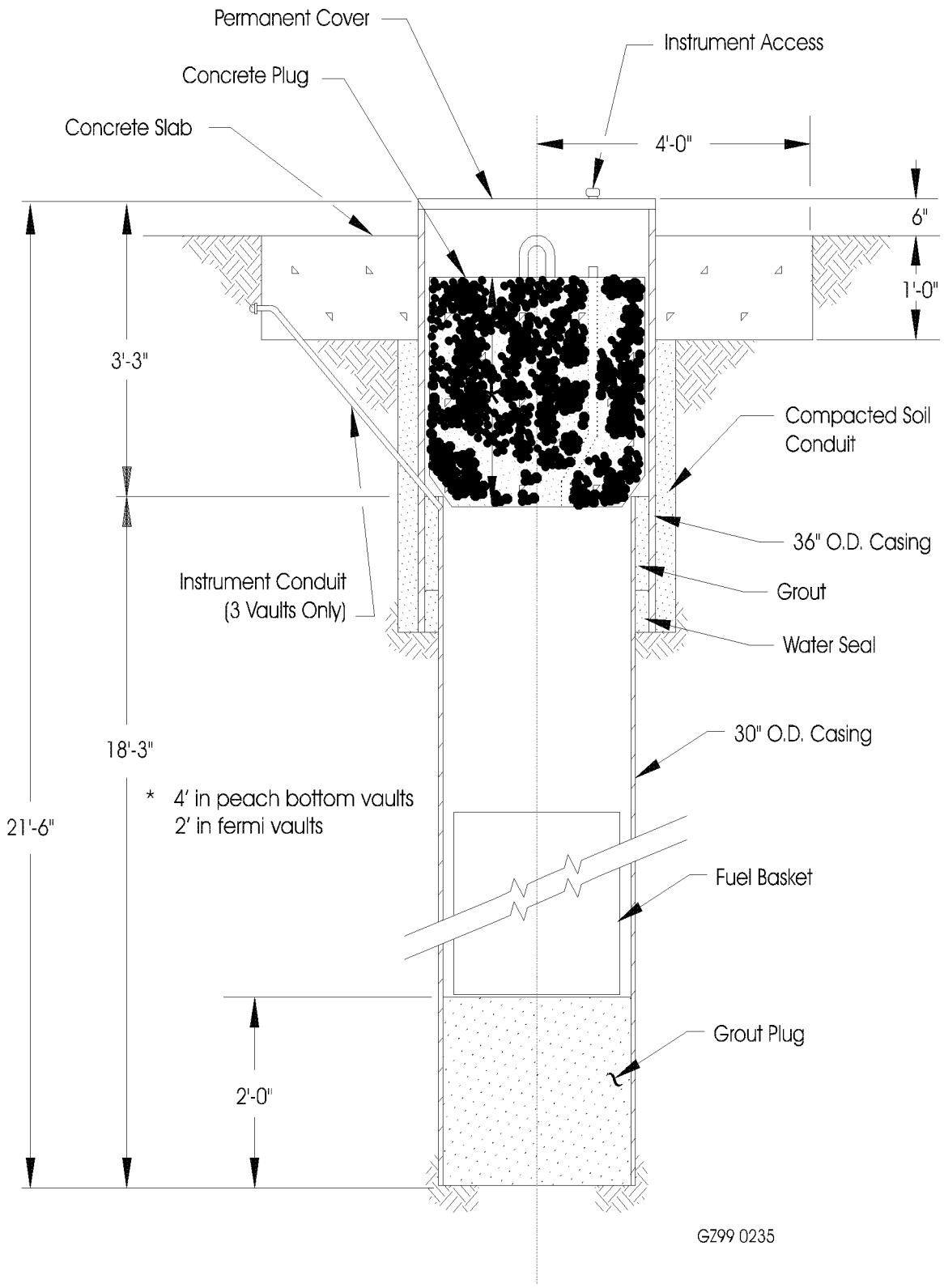

Figure 4.7-3. Peach Bottom-Fermi First-Generation Fuel Storage Vault

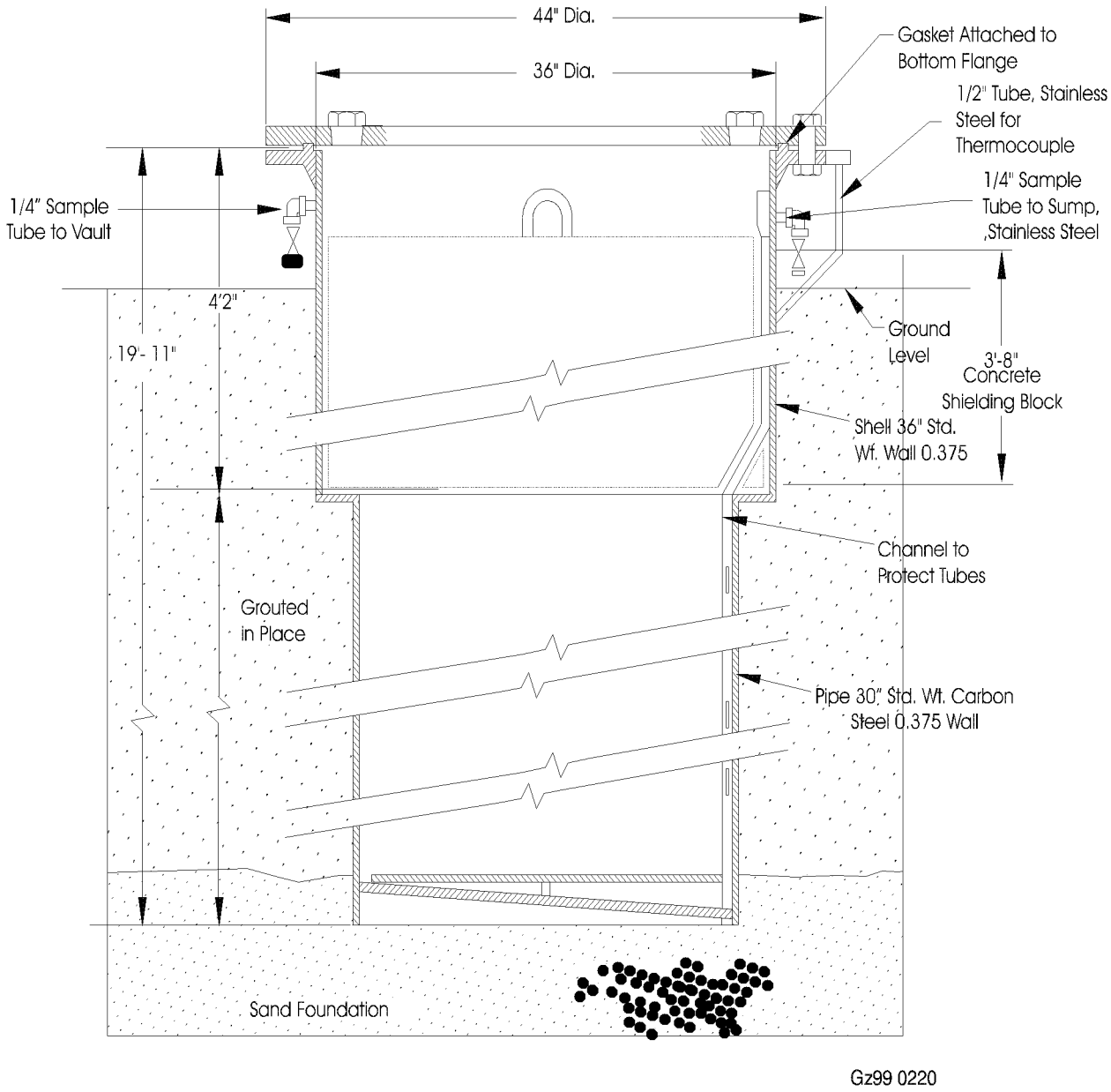

Figure 4.7-4. CPP-749 Second-Generation Storage Vault

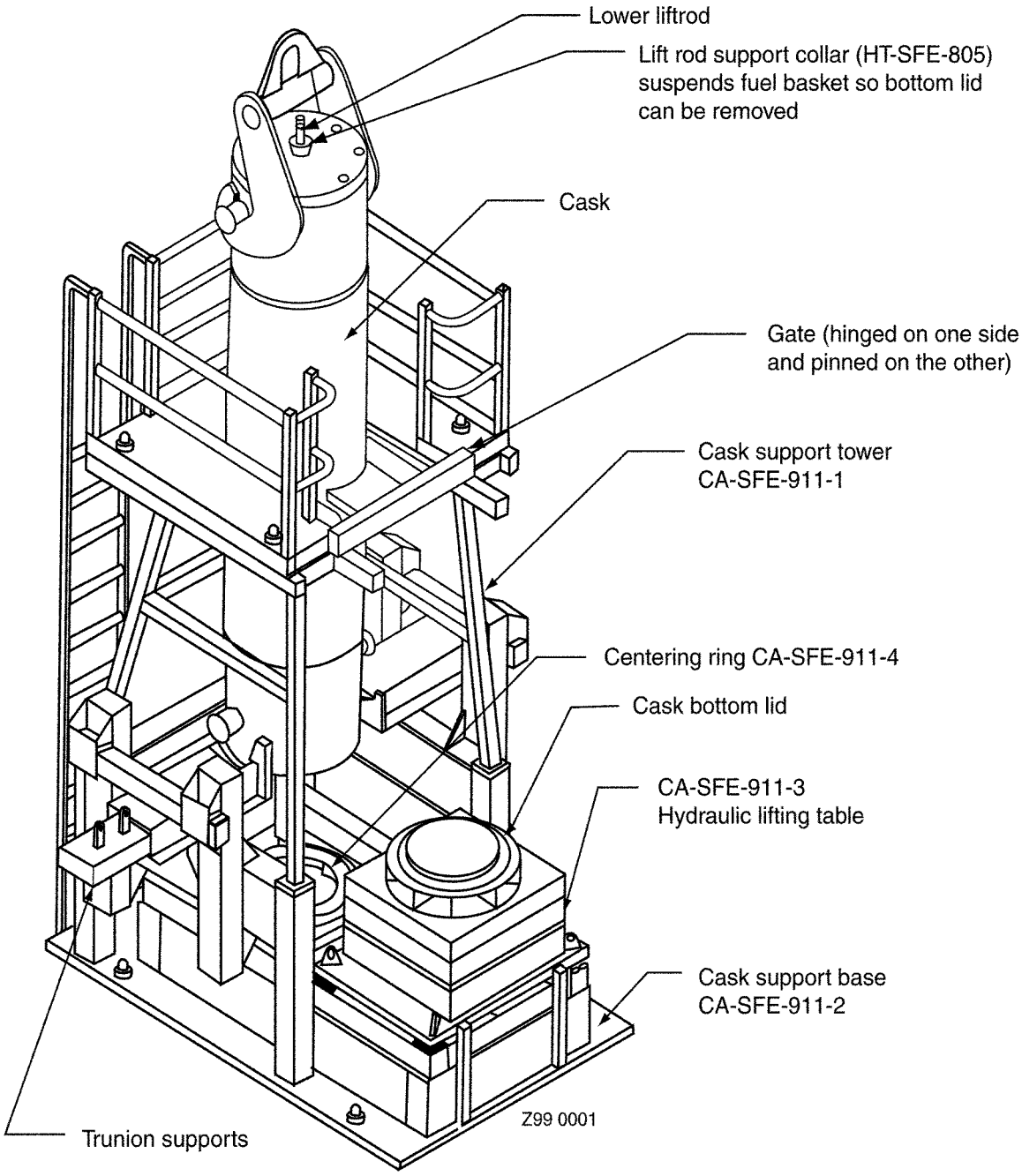

Figure 4.7-5. New Centering Device

The new centering device consists of a number of components that are assembled over the vault. The centering device base (CA-SFE-911-2) is first positioned over the vault. The portion of the base which surrounds the vault opening is filled with lead shot. This provides shielding as the fuel is moved into the gap between the top of the vault and the bottom of the cask. This base is equipped with a trolley on rails and a hydraulic table (CA-SFE-911-3). Access is provided to allow removal of the bottom lid bolts. The centering device provides shielding to personnel during the bolt removal and other operations as long as the cask is positioned on the centering ring.

When the new centering device base is positioned, the centering ring (CA-SFE-911-4), a thick walled metallic collar, which is equipped with radially mounted guide vanes on its top and bottom, is placed on the opening hole of the centering device. This provides seating for the cask, after the bottom lid has been removed. A tower frame (CA-SFE-911-1) is then mounted on the base. The tower frame has a set of symmetrically mounted half-circular supports for the lower trunnions of the cask. The trunnion supports are hinged and are lowered into position to support the cask when required. The upper part of the cask is surrounded by a metal platform with a half-circular opening and a hinged gate bar that is pinned in the closed position while the cask is in the centering device. A fixed ladder allows access to the tower platform.

Inspection ports on the new centering device allow a remote camera to be inserted into the vault. The camera provides visual assistance for operations personnel to retrieve and store fuel.

After the new centering device is assembled over the vault, the cask is lifted into the centering device. With the cask on the trunnion supports, a hydraulic table is raised to support the bottom cask lid. The remaining lid bolts are removed, and the table, with the bottom lid, is lowered and the trolley is moved away from the vault opening. The cask is then lifted slightly by the crane so that the lower trunnion supports can be rotated out of the way. The cask is then lowered onto the centering ring for fuel transfer.

The new centering device has only been evaluated for use in transferring Peach Bottom fuel. New safety evaluations are required in order to use this device with other fuel types.

4.7.4.5 Peach Bottom Basket Support Modification. As discussed earlier, the Peach Bottom baskets and canisters stored in the first-generation vaults are corroding. A new support plate will be installed on bottom of the existing Peach Bottom basket. This support plate prevents fuel cans from dropping through the bottom of the basket during handling should the corroded bottom fail. The support plate is connected to a rod that extends through the center tube of the basket. The support plate and rod are shown in Figure 4.7-6. The connection is made remotely using the insertion tool to extend the rod through the penetration in the top cask lid, through the center position of the basket, to the new support plate below the basket where it is threaded into place and torqued. This rod also has a threaded lifting fixture at the top. A lifting rod can then be connected to the rod for handling the fuel. The basket will continue to be relied on to provide lateral support for the canned elements.

The support plate (PLT-DSW-902-XX) has a diameter of 25 in. It is fabricated of ¾ in. Type 304 stainless steel plate. The rod is fabricated of ¾ in Nitronic 60 with a length of 153.5 inches.

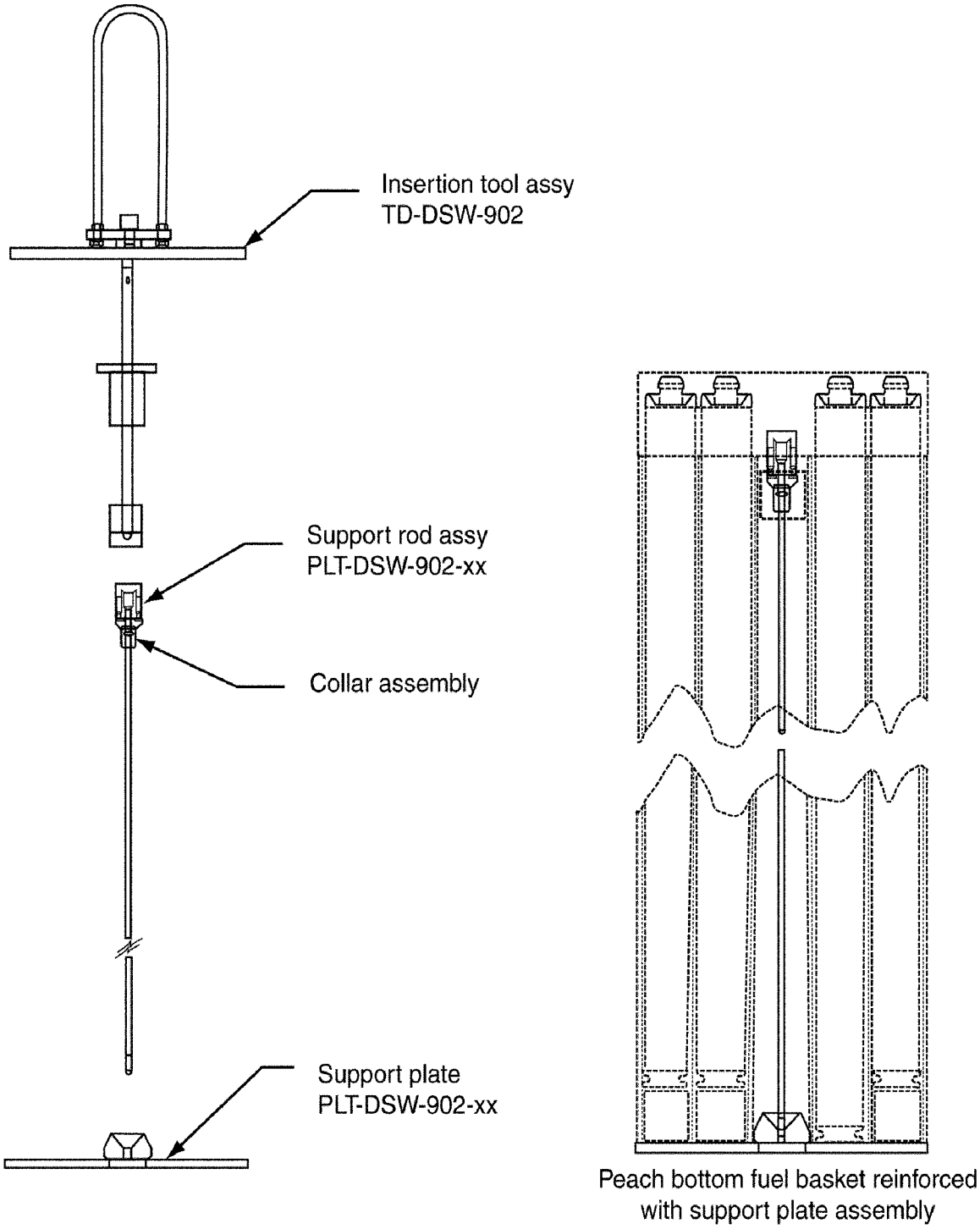

Figure 4.7-6. Peach Bottom Basket Modification

4.7.4.6 Fuel Canisters. The canisters containing Peach Bottom and Fermi fuel are discussed below. The Peach Bottom basket is also discussed.

4.7.4.6.1 Peach Bottom Canisters and Baskets. Peach Bottom fuel elements are individually sealed in canisters containing an inert helium gas atmosphere. Each canister has a 6061 aluminum alloy outer wall and a mild-steel inner liner. The inner liner is 10 ft long by 1/16 in thick and has an outer diameter of approximately 4.1 in. The steel liner adds weight to the canisters and prevented them from floating in water in the storage pool at the Peach Bottom facility in Pennsylvania.

After a fuel element was inserted, a magnetic pressing process was used to seal the top of each canister around an aluminum cap with a lifting knob and a double O-ring seal. This formed an airtight unit with approximate dimensions of 4.5 in. by 12 ft 9 in. long and weighing about 150 lb. The wall thickness is 0.065 in. The canisters were sealed at atmospheric pressure and helium leak tested before being placed in the storage pool at the Peach Bottom facility. Leaking fuel element canisters were placed inside salvage canisters of the same construction and configuration except with dimensions approximately 4.75 in. OD by 13 ft 2 in. long.

The canned fuel elements were placed in a basket inside the transfer cask for shipment. The fuel is kept in the basket for handling and for long-term storage at the INTEC. The basket consists of 18 storage tubes spaced in concentric circles located around a center position, for storing up to 18 elements (see Figure 4.7-7). A lifting plug is attached at the upper end of the center position for connecting the lifting rod during fuel handling operations. There is no fuel can in the center position. The basket is 158 in. long and is approximately a 25 in. diameter cylinder.

Peach Bottom fuel baskets may be recovered from the original storage vaults if the vault atmospheric monitoring indicates a potential degradation of either vault or storage canister integrity. As previously discussed the Peach Bottom baskets in the first-generation vaults will be transferred to second-generation vaults due to corrosion on the bottoms of the existing baskets and canisters. If subsequent inspection of the canisters or storage baskets indicates corrosion, physical damage, or any other unsafe storage condition, canisters will be provided to replace either the inner, individual fuel element canister or the storage basket.

The inspection and canister replacement will be done in the Irradiated Fuel Storage Facility handling cave, as described in PSD Section 4.12.

4.7.4.6.2 Fermi Fuel Canisters. Fermi I Blanket subassemblies are contained in a stainless steel canister with a carbon steel basket inside. The basket was loaded in the Fermi I storage basin, raised out of the water, allowed to dry, and inserted in the canister. The canister end plate was then welded on. Each canister is 11 ft 2.5 in. long, 25.5 in. OD, and made of Type 316 stainless steel with welded ends. A threaded boss is welded in each end to accept lifting rods for handling. The canisters are stored upside down from the way they are loaded. The loaded canisters weigh approximately 10,000 lb compared with the approximate 3,000 lb for Peach Bottom.

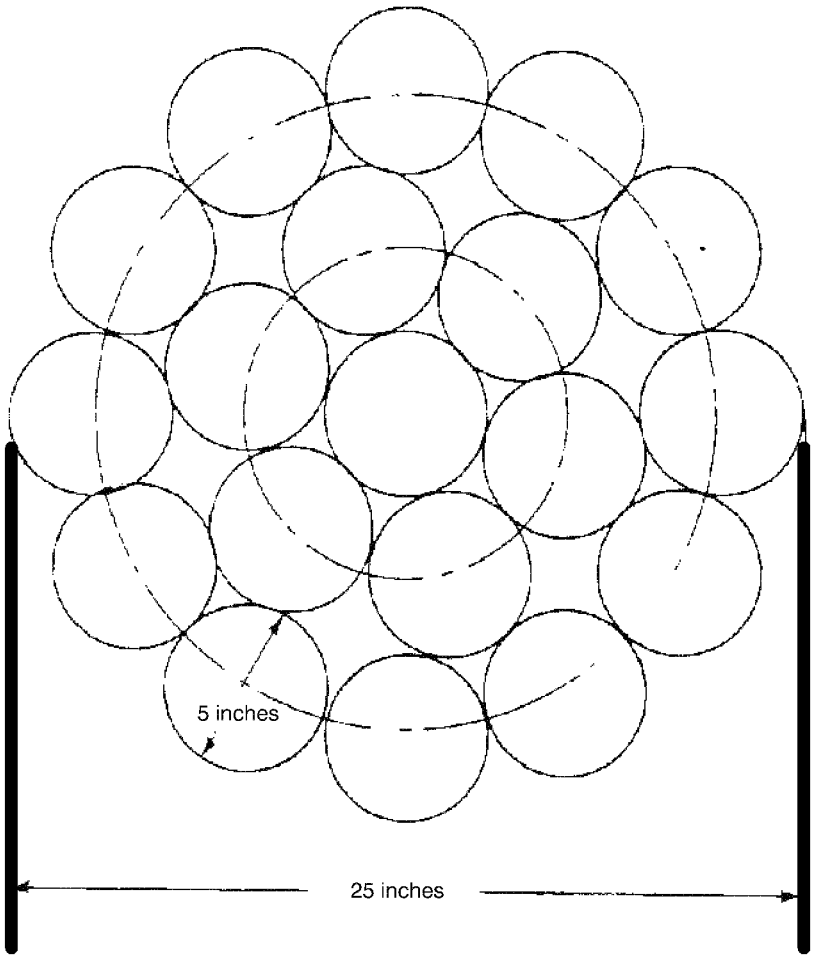

Figure 4.7-7. Cross-section of Peach Bottom Fuel Basket

The canister loaded with the most highly irradiated radial blanket subassemblies contains the following fissile constituents:

Pu-239	1660 g
U-235	9100 g
U-238	2.6×10^6 g

4.7.4.7 Fuel. The Peach Bottom I Core 1 fuel elements consist of thorium carbide and uranium carbide (93.15%) microspheres coated with pyrolytic carbon and dispersed in a graphite matrix; an element is shown in Figure 4.7-8. Most components are made of graphite; exceptions include the fuel compacts and burnable poison compacts placed in the hollow spines of some fuel elements. The reactor was designed to operate at a full power of 115.5 Mw(t) for 900 days and spent fuel was to be shipped with a minimum cooling time of 120 days. However, the Core 1 fuel received only about 450 equivalent days of full power operation and had more than one year cooling time before shipment. The heat output was about 80,000 Btu/hr. The heavy metal content of the fuel is given in Table 4.7-1.

Nine canisters each containing a Peach Bottom I Core 2 fuel element will be received from Oak Ridge. One canister contains a standard element and the other eight canisters each contain a test element. Both types of elements have a central spine in the fuel region. In the standard element, fuel compacts of a ring-like configuration fit around the central spine. In the test element, up to eight fuel rods surround the spine in a telephone dial-like arrangement.

Four types of Fermi I Blanket subassemblies, shown in Figures 4.7-9 and 4.7-10, are stored at the INTEC: the outer radial blanket (ORB), inner radial blanket (IRB), upper axial blanket (UAB), and the lower axial blanket (LAB). Each 2.646 in. square blanket subassembly is made up of a network of 16 or 25 clad fuel pins.

Each blanket section, which is an alloy of 97 wt% uranium (0.3% U-235) and 3 wt% molybdenum, is 0.395 in. in diameter and is either 41 or 61 in. long depending on the type of subassembly. The fuel is sodium bonded to the 0.01-in. thick Type 304 stainless steel cladding. The maximum amount of sodium contained in the fuel pins is 5.5 g for the axial and 20.7 g for the radial blanket assemblies. The maximum quantity of sodium in any canister is 53.5 lb.

The design heat generation rate for the hottest subassembly was about 400 Btu/hr element. The actual subassemblies generated heat at a rate of about 7 Btu/hr element. In this reactor, about 20% of the power was developed in the blanket; therefore, the highest irradiation corresponds to a significant burnup. Information about the fission product content of the Fermi I Blanket subassemblies on June 1973 (19 to 23 months before introduction into storage) is presented in Table 4.7-2.

4.7.4.8 Peach Bottom Cask. The Peach Bottom shipping cask is used to transfer both Peach Bottom and Fermi fuel.

A detailed description of the Peach Bottom cask is contained in PSD Section 4.5-Addendum J. The following is presented for general information.

The cask has an outer diameter that varies from 40.5 in. at the neck to 42.5 in. The cask has an overall length of 191.12 in. (including impact limiters), and a width across the trunnions of 50.0 in. The

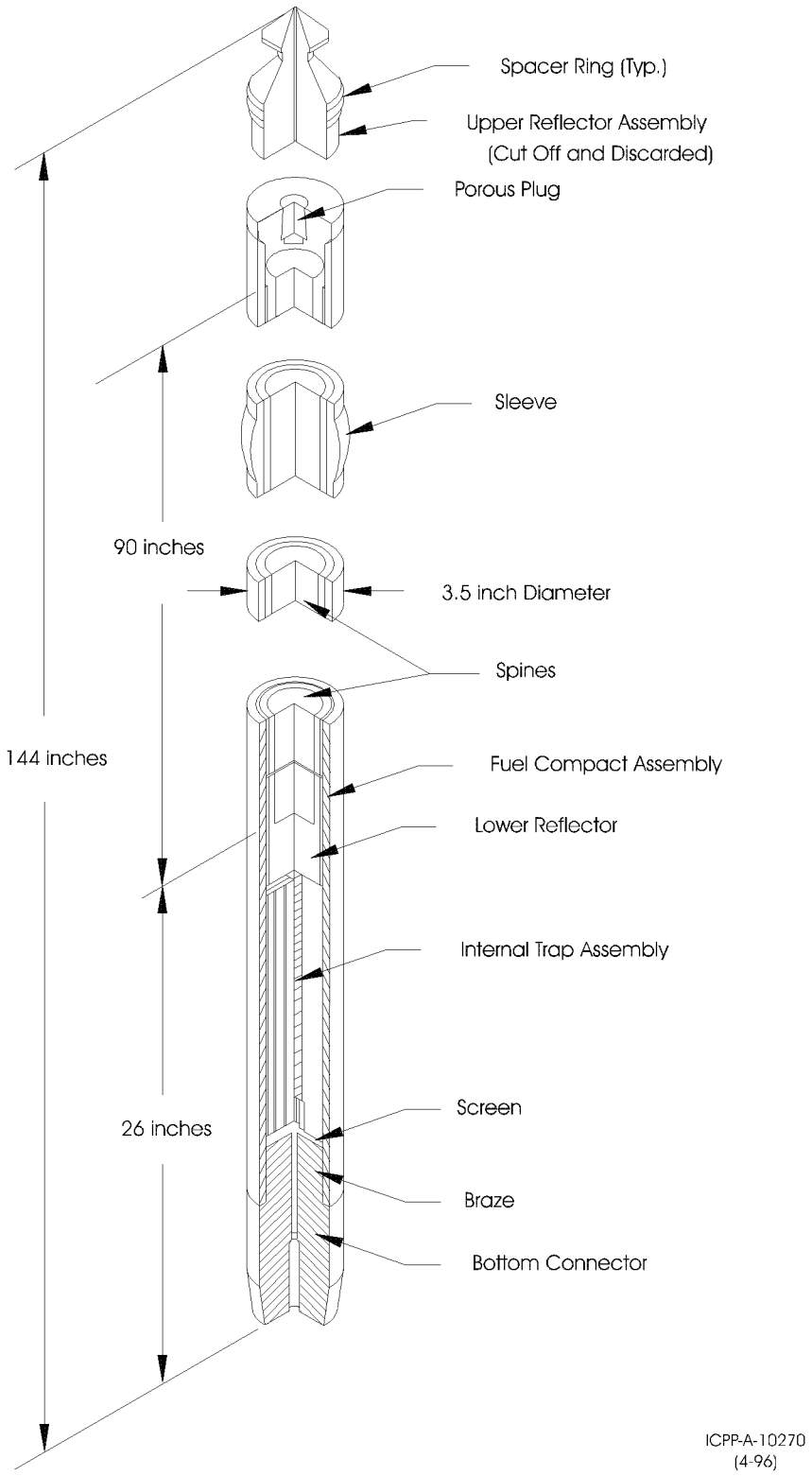

Figure 4.7-8. Peach Bottom Fuel Element

internal cavity is 26.0 in. in diameter and 159.0 in. long. The top end of the cask is equipped with a removable plug to provide access to the lifting device on the fuel basket.

The cylindrical cask body is constructed with a 0.25 in., 304 stainless steel cavity liner, a maximum of 6.25 in. lead, a 1.50 in. mild-steel outer shell, and a 0.25 in., 304 stainless steel overlay. The cavity liner is seam welded and polished to a No. 3 finish. It is welded at both ends to offset cones that form cavities for the end closures. The lead thickness is 5.25 in. from the bottom of the cavity to 24.5 in. above the bottom; it is 6.25 in. thick from 24.5 in. above the bottom to 134.5 in. above the bottom; and it is 5.25 in. thick over the remainder of the length. The cask has a loaded weight of approximately 62,800 lb. The cask was specially designed to facilitate the insertion of fuel directly into the vault. The cask is also used to transfer fuel between the first-generation and second-generation vaults.

Table 4.7-1. Heavy Metal Content of Peach Bottom I Core 1 Fuel

Heavy Metal	Weight (kgs)	
	Before Burnup	900 Days Irradiation
Th-232	1450.0	1390.0
Pa-233	-	2.76
U-233	-	35.1
U-234	3.5	6.04
U-235	220.0	101
U-236	1.18	26.6
U-238	11.46	9.92
Np-239	-	0.0057
Pu-239	-	0.35
Pu-240	-	0.08
Pu-241	-	0.16
Pu-242	-	0.06

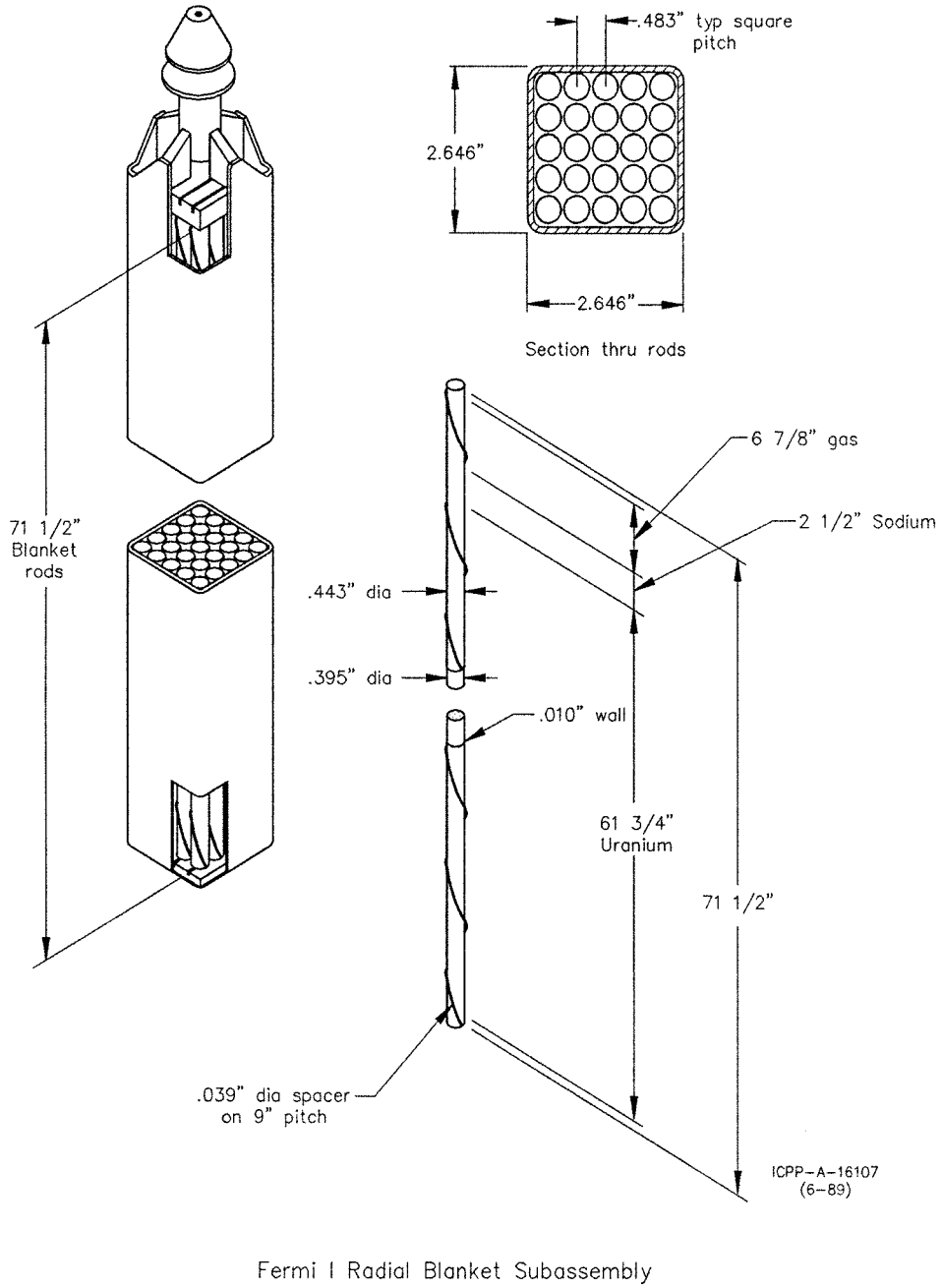

Figure 4.7-9. Fermi I Radial Blanket Subassembly

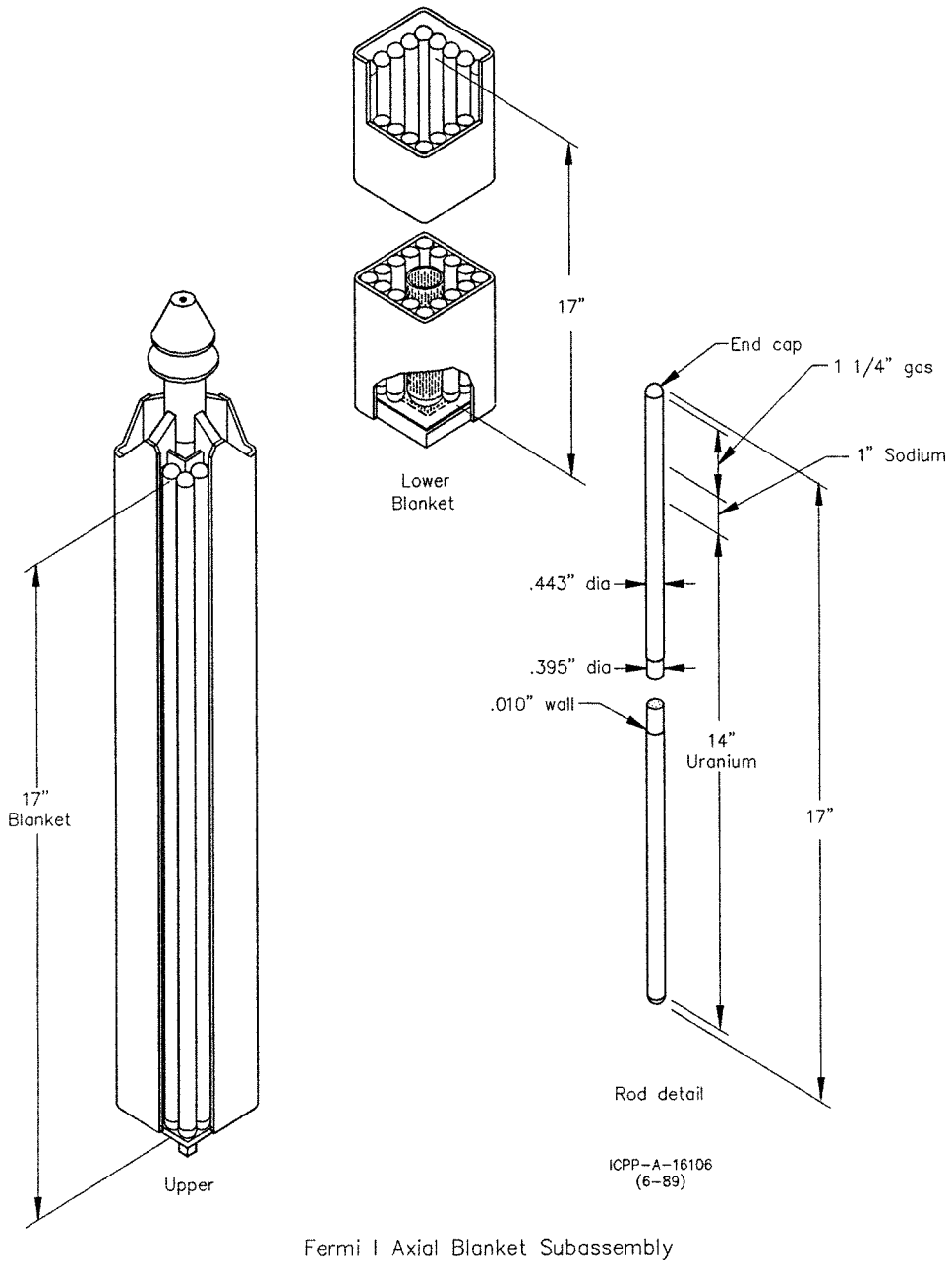

Figure 4.7-10. Fermi I Axial Blanket Subassembly

Table 4.7-2. Calculated Activity of Fermi I Blanket in Curies

Nuclide	Subassembly Number 336		Total Radial Blanket	
	June 1, 1973	November 1, 1981	June 1, 1973	November 1, 1981
		Fission Product		
Kr-85	3.8	2.2	260	150
Sr-89	1.3	-	85	-
Sr-90	29	24	2,000	1,600
Y-90	29	24	2,000	1,600
Y-91	3.6	-	240	-
Zr-95	7.2	-	490	-
Nb-95	7.2	-	490	-
Ru-103	0.13	-	9	-
Ru-106	14	0.00041	970	0.0028
Rh-106	14	0.00041	920	0.0028
Sb-125	1.4	0.17	95	12
Te-127	0.57	-	38	-
Cs-137	28	23	1,900	1,600
Ce-141	0.045	-	3	-
Ce-144	210	12	14,000	8.1
Pr-144	210	0.12	14,000	8.1
Pm-147	12	1.3	790	86
Sm-151	0.83	0.78	56	53
Eu-155	0.83	0.26	56	17
Total	580	100	39,000	6,500
		Activation Product		
Co-58	0.26	-	66	-
Fe-59	9.0	-	2,300	-
Co-60	1.7	0.57	440	150
Ni-63	0.25	0.24	640	60
Total	12	0.81	2,900	210

A new top lid (COV-DSW-005) for the Peach Bottom cask was manufactured to use in transferring Peach Bottom fuel baskets at CPP-749. This lid has a larger diameter penetration for insertion of the new basket support rod and provides 1 inch of additional cavity space to allow installation of the new support plate and rod for refurbishing Peach Bottom fuel baskets. This new lid is not compatible with the installation of the external impact limiters on the Peach Bottom cask. For this reason the Peach Bottom cask with this lid cannot be used for movements of fuel outside of CPP-749.

4.7.4.9 Fuel Handling Equipment. Additional equipment necessary for the handling of Peach Bottom and Fermi fuel is described below.

4.7.4.9.1 Cranes. The cranes used at CPP-749 for handling Peach Bottom and Fermi fuel are the Renner Hydro-Porter 40-ton gantry crane and a mobile crane. The mobile crane, with no cask load, and the gantry crane can be positioned within 4 feet of the center of a storage vault, since the wheel load is less than 50,000 lbs./tire.[6] The outrigger blocks on the mobile crane with a cask load are positioned at least 6 feet from the center of a storage vault.[8]

4.7.4.9.2 Cask Lifting Yoke. A new yoke (CRNY-DSW-800) was manufactured for lifting the Peach Bottom cask at CPP-749. It was designed to meet the 5 to 1 ultimate and 3 to 1 yield strength requirements.

4.7.4.9.3 Lower Lifting Rods. A lower lifting rod is attached to the fuel basket or canister for transfer between the cask and the vault.

4.7.4.9.4 Insertion Tool. A new tool was fabricated for use in modifying the Peach Bottom baskets as they are transferred from first-generation to second-generation vaults. This tool, TD-DSW-902, is used to insert the new support rod through the center position of the Peach Bottom basket to the new support plate where it is threaded into place. The insertion tool is then disconnected from the support rod and removed from the cask.

4.7.4.10 Instrumentation and Alarms. The instruments used during fuel handling are as follows. Portable radiation monitors are used to measure radiation levels. A constant air monitor (CAM) can be used to monitor the vault atmosphere during fuel handling operations. A CAM is placed downwind during the transfer of Peach Bottom baskets from first-generation to second-generation vaults. The RCTs, as required, use other radiation monitoring instruments. A load cell is used during fuel storage and retrieval operations to monitor lifting loads.

Handling and storage of fuels, which by their physical form and radionuclide distribution can be shown by analysis to be critically safe for all credible normal and accident conditions, do not require a criticality alarm system (CAS), per DOE Order 5480.5. Peach Bottom and Fermi fuels cannot be made critical within the size limitations imposed by the Peach Bottom cask and the storage vaults. Therefore, no CAS is required for handling these fuels.

When the fuel is in storage, instruments are used to monitor the storage conditions within the vault. Three Peach Bottom vaults and all second-generation vaults are equipped with thermocouple tubes to permit measuring vault temperature. The second-generation vaults have pressure gauges for monitoring pressure. A psychrometer is used to measure humidity, and sample bombs are used to obtain vault atmosphere samples for laboratory analysis. A portable gas detector is used to measure the level of flammable gases in the in the atmosphere of first-generation vaults where the welds will be ground off to remove the cover.

4.7.5 Interconnections

The only interconnection between the underground fuel storage area and the rest of the plant is the electrical power that supplies the cathodic protection system, lighting, and security system.

4.7.6 Control Methods and Procedures

Various control methods and procedures are used to ensure that radioactive and fissile material transfers are made safely. Control methods and procedures that apply to the handling and storage of Peach Bottom and Fermi I fuel are presented in this section. This section describes the methods and procedures used in Peach Bottom and Fermi fuel handling and storage, with particular emphasis on (1) preventing a nuclear criticality, (2) minimizing personnel exposure to radiation and contamination and environmental releases, and (3) preventing industrial safety hazards, for example, fire. Although many of these methods and procedures were mentioned previously in the process and equipment descriptions, this subsection separates procedures needed for control from procedures describing functional operations.

Many of the controls described herein were developed from 25 years of operating experience and from prior safety analyses. Some were added as a result of a specific safety analysis.

4.7.6.1 Criticality Control. Fuel elements were canned at the Peach Bottom facility and stored in the Peach Bottom storage pool, which contains deionized water. The canned fuel elements were placed in a basket, which was loaded into the shipping cask underwater at the Peach Bottom facility. Thus, actual handling proved each shipment of Peach Bottom fuel critically safe with water moderation before it arrived at the INTEC.

Likewise, underwater storage and handling at Fermi I proved each shipment of Fermi I Blanket fuel critically safe before it arrived at the INTEC.

The fuels were stored in the same configuration and container in which they are shipped. Only one shipment (one cask) was handled at a time.

Even though criticality is extremely unlikely, both fuels were independently evaluated to ensure nuclear criticality safety during storage at the INTEC. These studies are discussed in 4.7.7.1.

As a result of the evaluation, the approved fuel storage and handling units are:

1. For Peach Bottom fuel, each vault shall contain only one storage basket or canister containing up to 18 canned Core 1 elements or up to 9 canned Core 2 elements

2. For Fermi I Blanket fuel, each vault shall contain only one 25-in. diameter stainless steel canister.

4.7.6.2 Radiation and Contamination Controls. Since the handling and storage of irradiated material is involved, potential radiation hazards exist. Technical procedures (TPRs) have been written and approved to permit safe handling of the fuels under normal circumstances.

A five-foot restricted zone is established around a vault, which contains fuel with the shield plug removed. This restriction is imposed to protect personnel from entering a radiation zone that is created by fuel in the vault that appears as an inverted frustum cone between the vault opening and the space above. The following entries are exempted from the five-foot restriction:

1. Removal or installation of the bottom cask lid
2. Manipulation of the trunnion supports on the centering device
3. Accessing the tower platform on the centering device
4. Aligning the cask for movements in the centering device and on or off the trunnion supports
5. Performing radiation surveys
6. Adjusting the camera for performing inspections.

Other radiological controls are:

1. The new centering device, which provides radiation shielding while moving fuel into or out of a vault
2. The concrete shield plugs which are 4 ft thick in the Peach Bottom vaults, 2 ft thick in the Fermi vaults, and 3 ft 8 in. thick in the second-generation vaults, which may be used to store either Peach Bottom or Fermi fuels
3. A vault containing fuel is not left unattended without the shield plug/cask in place
4. The shield plug is installed as soon as possible after the fuel is stored
5. Once the shield plug is in place, a cover is welded on the top of a first-generation vault, or bolted, with a gasket, on the top of a second-generation vault
6. RCT monitoring is required throughout fuel loading and unloading operations
7. Temporary shielding that will be installed as necessary
8. A CAM is placed downwind during the transfer of Peach Bottom baskets from first-generation to second-generation vaults.

As listed above, a vault containing fuel is not left unattended without the shield plug in place. During the transfer of Peach Bottom fuel from first-generation to second-generation vaults, the vault may be left unattended as long as the following conditions are met:[9]

- The centering device is positioned over the storage vault
- The cask is on the centering ring of the centering device
- The entrance to CPP-749 is locked and access is controlled by operations
- An RCT or fuel handling operator periodically monitors the storage vault to ensure conditions have not changed.

This control was specifically written to cover shift changes, darkness, or inclement weather changes.

In addition, fuel handling operations are not initiated if the sustained wind velocity is greater than 25 mph. If the sustained wind speed increases to greater than 25 mph after fuel handling activities have started, operations will only continue until a safe stopping point is reached. Continuation of operations requires the approval from an area safety representative.

The storage facility is checked periodically to determine if any water seepage, flammable gases, or airborne activity are indicated in the vault atmosphere. This periodic checking prevents significant hazards from developing. Gas samples are drawn from the vaults using an evacuated sample bomb and then analyzed in the INTEC analytical laboratory. Moisture is detected by using a portable psychrometer, which can be easily checked before each use by verifying air conditions.

Administrative controls require gas samples be drawn from each vault at a minimum of every two years. Samples are analyzed for oxygen, nitrogen, hydrogen, helium, and radionuclides. Vaults containing Peach Bottom fuel are sampled for acetylene. If the air samples from any vault contain

abnormally high or unexpected amounts of contaminants, administrative controls call for developing a recovery plan and purging the vault with inert gas. The Peach Bottom cask would be used to transfer fuel to a spare, empty vault maintained to allow for such transfers.

Temperature and moisture measurements are also taken from each vault at least every two years. The spare vault without any fuel is also inspected for any water seepage. The collected data from the vaults is evaluated by a corrosion specialist for evidence of corrosion that could affect storage or retrieval of fuel, and thus, identify any hazardous conditions in time to prevent serious consequences.

4.7.6.3 Fire and Explosion Controls. The potential for fires and explosions during handling is minimized by administrative procedures. Casks normally do not contain combustible materials nor will the atmosphere within the containers easily support combustion.

Should a fire occur at the INTEC, the INTEC Incident Response Team (IRT) will respond until the DOE Fire Department arrives. In addition, the cranes and transport truck are equipped with portable fire extinguishers.

Corrosive reactions of water with fuel or with the canister and vault lining can generate hydrogen and thus potentially explosive mixtures. Therefore several controls minimize the potential for water in the vault. TPRs require that (1) a vault not be used if there is water standing in it, (2) vault covers be welded or bolted in place, and (3) vault atmosphere be sampled regularly for hydrogen, hydrocarbons, oxygen, and humidity. In addition, the vaults are designed to preclude ground water , and the casing for each vault extends 6 in. above the concrete pad to keep out surface water.

If analysis of the vault shows a combustible mixture of hydrogen, hydrocarbon, and oxygen or a potentially combustible composition that on dilution with air would be combustible, the atmosphere of that vault shall be purged with an inert gas until the combustible or potentially combustible composition no longer exists.

In the event that analysis of the vault atmosphere shows radionuclides, noble gas, or particulate activity significantly different from background, a recovery plan shall be developed and executed. As a minimum, the operations, engineering, quality assurance, and environmental organizations shall concur on plans to correct apparent corrosion or on plans to safety dispose of the activity to the atmosphere and to determine and correct the source of containment failure.

4.7.7 Safety Evaluation

To ensure that adequate controls exist for the safe operation of the underground fuel storage facility CPP-749, a safety analysis has been performed for each portion of the operation. These evaluations cover the functional categories of nuclear criticality safety, radiation and contamination safety, fire and explosion safety, and general industrial safety.

Safety-related effects of various postulated abnormal occurrences, including natural phenomena (earthquake and flood), are discussed in evaluating the overall risk for the facility operation.

4.7.7.1 Criticality Calculations. Although Peach Bottom fuel canisters are stored and loaded into shipping baskets underwater at the reactor facility, independent calculations were performed to assess the margins of safety for all possible normal and abnormal conditions that could occur at the INTEC.[10] The results of those calculations are presented in Table 4.7-3.

In these calculations, it was assumed that each basket of fuel contained 19 fuel canisters although the center position actually is occupied by a lifting fixture rather than by fuel. Other conservative assumptions included no fuel burnup, infinite fuel length, and close packing of the 19 fuel canisters in the basket.

The first four calculations tested the effects of various configurations of water moderation and reflection. The fifth calculation shows the effect of placing an infinite number of fuel canisters in a close packed array with canisters flooded in a water medium. The sixth and seventh calculations show the effect of wider spacing of fuel within the basket as in the actual canister and basket designs used. The seventh calculation assumes that water and fuel within all 19 canisters is homogenized, which could occur after completion of reaction of the carbide fuel material with water.

All calculations show ample safety margins for criticality for any handling and storage configuration that could occur, whether handled in single basket quantities (actual case) or in multiple shipment quantities. The outer canister which may be used in place of the basket, contains the same number of fuel elements as the basket, in the same geometrical constraint as the basket, and the criticality calculations envelope any conceivable conditions of reflection and moderation. No critical assembly, therefore, is considered credible under any postulated accident conditions while handling or storing Peach Bottom I Core 1 fuel.

The handling and storage of the basket containing nine Core 2 elements is enveloped by the CSE for the handling and storage of 18 Core 1 elements.

Fermi I fuel has been demonstrated to be critically safe in a water flooded array during storage and preparation for shipment at the reactor facility in a manner similar to the handling of Peach Bottom fuel. The maximum calculated plutonium content of any fuel subassembly stored in the vaults at the INTEC is 39.36 g (subassembly no. 336) associated with 55,332 g of depleted (0.35% U-235) uranium. Since the ratio of the maximum-to-average plutonium concentration in any one subassembly is 1.639 and assuming that the total subassembly has this maximum concentration, the maximum possible plutonium content would be 64.5 g or 0.117% of the heavy metal content. Nuclear criticality could not occur under any credible conditions while handling or storing Fermi I Blanket subassemblies even if all subassemblies contained the maximum credible plutonium concentration throughout their entire lengths.

Table 4.7-3. Criticality Calculations for Underground Fuel Storage

Case	Description	Assumptions and Bases	Calculated Results
1	Determine k_{eff} for one storage position with no water present	1. Circular array of 19 elements 2. 4.5-in. fuel canister diameter; 21.8-in. array diameter 3. No fuel burnup 4. No burnable poison present in fuel 5. No effect from vault or soil 6. Array has infinite height	k_{eff}=0.031
2	Same as Case 1 with water reflection outside the canister	1. Assumptions 1-6 in Case 1 2. 23 cm water reflection outside the canister	k_{eff}=0.323

Case	Description	Assumptions and Bases	Calculated Results
3	Same as Case 1 with water moderation and reflection outside the canister	1. Assumptions 1-6 in Case 1 2. Vault flooded with water 3. 25 cm of water reflection	k_{eff}=0.637
4	Same as Case 1 with water inside and outside the canister	1. Assumptions 1-6 in Case 1 2. Vault and canisters flooded with water 3. 25 cm of water reflection around the array	k_{eff}=0.684
5	An infinite array of canned elements tightly packed together	1. Assumptions 3-6 in Case 1 2. Water flooding of canister and vault	k_{eff}=0.738
6	Same as Case 1 with actual fuel spacing and water flooding	1. Assumptions 1 and 3-6 in Case 1 2. 5.25-in. canister diameter and 25.56-in. array diameter 3. Water flooding of canister and vault 4. Infinite reflection	k_{eff}=0.784
7	Same as Case 1 after water carbide reaction	1. Assumptions 1 and 3-6 in Case 1 2. Assumptions 2-4 in Case 6 3. Water and fuel within canisters homogenized	k_{eff}=0.877

4.7.7.2 Radiation and Contamination Safety. Radiation exposures could occur during normal handling of the fuel or as a result of accidents or equipment failures. At the time of placing these fuels in storage, radiation fields up to 6 R/hr were possible near the fuel transfer cask if the top or bottom shield plug were removed from the cask. The fuel basket is not allowed to project from the cask unless the appropriate shielding is present. Consequently, all fuel handling operations require radiation monitoring by RCT personnel.

Occasional inadvertent exposures to the 6 R/hr field are probable; however, the short time required for operations close to the radiation field, the usual participation of two operators, and the RCT surveillance would be expected to limit inadvertent radiation doses to a few millirem at most.

Exposure of workers to fields higher than 6 R/hr would require gross error by operators, such as looking into a loaded fuel transfer cask or into a storage vault containing fuel when the shield plug has been removed. The cask height and the selection of handling tools and crane boom lengths make it inconvenient for personnel to commit such errors. Similarly, misalignment of the cask with the vault centering device would be readily apparent before an attempt would be made to lower the fuel basket out of the cask shielding. Such an error would require simultaneous failures by the trained fuel handling operators, crane operators, and the RCT monitor.

Calculations were performed to predict the direct gamma radiation exposure to personnel from the movement of Peach Bottom fuel from first-generation to second-generation vaults.[11] Three scenarios were evaluated:

1. The cask, fully loaded with Peach Bottom fuel, is lifted 9 ft above the ground with the bottom lid removed.

2. The cask, fully loaded with Peach Bottom fuel, is lifted 6.4 ft above the ground with the bottom lid removed.

3. A fully loaded Peach Bottom basket is dropped while the cask is lifted 9 ft above the ground.

All exposure rates are assessed at 3 ft above the ground. The results are summarized below:

Table 4.7-4. Direct Gamma Exposure from Peach Bottom Movements

Scenario	Distance from Cask	Exposure Rate
1	4 ft	65 mR/hr
	52 ft	4.9 mR/hr
2	4 ft	213 mR/hr
	16 ft	100 mR/hr
	46 ft	5.7 mR/hr
3	4 ft	94 R/hr
	144 ft	100 mR/hr
	503 ft	4 mR/hr

The major potential for high exposure during fuel handling and storage would be from a fuel basket or canister drop. This situation is evaluated in 4.7.7.5.1.

4.7.7.3 Fire and Explosion Safety. Casks and vaults normally do not contain combustible material; the atmosphere within the containers will not easily support combustion. Although transport vehicles that enter the storage area introduce materials (e.g., fuel, oil, and rubber tires), it is improbable that these materials would be ignited.

As discussed in 4.7.6.3, controls exist to preclude water in leakage that could cause explosive conditions. For hazardous conditions to develop, water would have to go undetected for a significant amount of time. With the sampling program, this condition is unlikely.

Since operations started, sampling of the 14 Fermi vaults in the underground storage area has shown that one vault contained 3.1 vol % hydrogen (less than the lower flammable limit of 4.1 vol %). This sample was taken in April 1981. Although it is a safety concern to have a hydrogen concentration above the lower flammable limit, the possibility of an explosive reaction is negligible because there are no sources of ignition in the vaults and the equilibrium temperature is substantially below the auto ignition temperature.

4.7.7.4 Chemical and Industrial Safety. No toxic substances are used in underground fuel storage or during fuel handling.

4.7.7.5 Postulated Abnormal Occurrences. This section evaluates an improbable maximum postulated accident (MPA) and other highly improbable, but potentially serious accidents. This section also considers the safety implications of several natural phenomena on the underground fuel storage area.

Table 4.7-5 summarizes the credible abnormal occurrences for the underground fuel storage area that could result in undesirable consequences. The table includes the normal prevention safeguards, methods of detection, correction and control, and the consequences on the fuel storage facilities and surrounding environs.

4.7.7.5.1 Dropping a Fuel Basket/Canister (Maximum Postulated Accident). Dropping a fuel basket/canister is the MPA for underground fuel storage since it could result in radiation exposure to personnel.

Failure of the basket support mechanism could allow the fuel basket to drop from the transfer cask. Although the basket support mechanism is designed to support more than five times the maximum weight of a loaded fuel basket,[12] it is conceivable that unidentified damage or improper engagement could result in failure. Failure at two steps in the fuel handling process were analyzed:

1. While lifting the cask free from the bottom lid or lowering the cask onto the bottom lid.

2. While the fuel is being retrieved from or stored in a vault.

Failure in case 1 would drop the fuel basket or canister onto the bottom cask lid. When the sliding table is lowered for the lid removal the presence of the basket or canister would be apparent. The sliding table would immediately be raised back into position resulting in only minor accidental exposure to personnel. Subsequent recovery operations would be made under controlled conditions.

Failure in case 2 could result in two possibilities. First, the fuel could fall into the vault. The basket and/or fuel canisters may be damaged but the fuel array would be contained within the vault and shielded from personnel. The fuel would have to be retrieved and inspected for damage, but this operation would involve only controlled radiation exposure to personnel.

The second possibility is that the basket or canister falls from the cask but becomes hung up and does not fall completely into the vault. When the old centering device was used, the Peach Bottom cask with the bottom lid removed was not lifted more than 3 feet above the centering device. This translates to 5 ft 4½ in. above the ground. For the new centering device, the height of the open cask above the centering ring is 4 ft 2½ in. when the cask is supported by its lower trunnions. This height is increased by approximately one foot, when the cask is lifted slightly to rotate the trunnion supports on the new centering device out of the way. The total height is then 5 ft 2½ in. above the centering ring which is essentially the same as the lift height for the old centering device. If a fuel basket drops out of the cask on top of the centering ring and does not fall into the vault, a maximum of 5 ft 4½ in. of the basket would be exposed. To estimate the magnitude of radiation dose rates, an accident was assumed where 20 in. of the fuel basket was exposed. Dose rates at about 7 ft from the outer surface of the fuel basket are estimated at 25 R/hr. Thus, operating personnel will not receive large uncontrolled doses of radiation. The method of recovering a dropped fuel basket would depend upon the circumstances involved and radiation exposure to personnel would be carefully controlled during the recovery operation.

4.7.7.5.2 Corrosion of Vault and Canister. The generation of hydrogen in the storage vaults could result from (a) rapid oxidation of the vault's carbon steel lining or (b) galvanic corrosion of stainless steel coupled with carbon steel. For either of these reactions to occur, water must be present. Ground water could enter the vault through a faulty seam weld in the vault lining and be trapped by the vault's expanding type grout plug. Condensation could also occur inside the vault. Gas samples have indicated that some corrosion has occurred in the vaults.[13]

Humidity data might not indicate that liquid water is present in the vault because of the temperature gradient between the top and the bottom of the vault. Gas sampling, however, would detect the hydrogen.

The soil in the storage area is primarily sand and gravel and provides very good drainage. Under normal conditions, decay heat from the fuel will further reduce the moisture content in the soil adjacent to the casings. In extreme situations, the subsoil may become temporarily saturated with water because of broken water pipes, heavy rains, or sudden thaws. However, the vaults are designed to keep out ground water. The bottom of each first-generation vault is filled with 2 ft of sand-cement grout. Although grout shrinkage may leave a small gap between the ground and the casing, the bottom of the vault will remain sealed for all practical purposes; that is, a very large pressure differential would be required to force water into the vault. Since there is no known mechanism for producing such a pressure difference, it is highly improbable that water could seep into the vaults. It would also be highly unlikely that steam, if produced, would penetrate the vaults; the temperature gradient in the soil will establish a drive force to transport moisture away from the vault casings.

Because a cathodic protection system has been installed and because of the normally dry condition of the soil, corrosion of the vault casings will be almost negligible. Well casings at the INTEC have shown essentially no exterior corrosion from soil moisture after being exposed for more than 15 years. Combining this very low corrosion rate with the 0.28 in. thickness of the vault casings, it is estimated that the casings will have a useful life of more than 50 years. Thus, ground water should have no effect on the integrity of the vaults during storage.

Table 4.7-5. Postulated Abnormal Occurrences for Underground Fuel Storage

Operation	Postulated Abnormal Occurrence	Cause	Normal Prevention: Primary Safeguard	Normal Prevention: Secondary Safeguard	Detection	Correction	Control[1]	Possible Consequences: This System	Possible Consequences: Other Systems
Fuel handling	Drop fuel basket/canister	Failure of support mechanism	Thorough inspection of support mechanism	Handling performed by certified fuel handlers and crane operators	Visual	Lower cask over fuel basket/canister, if possible. Retrieve fuel basket/canister and control exposure	Precautions against contamination. Limit personnel exposure.	Irradiation of operating personnel	None
Storage	Hydrogen in vault	Inleakage of water and corrosion.	Vault structure	Decay heat from fuel, normally dry climate conditions	Sampling	Purge vault, remove water correct source of inleakage		Potential explosion if oxygen and ignition source present	
	Fission product release	Inleakage of water to vault and fuel	Vault structure	Canister integrity	Sampling	Correct source of inleakage, recan if necessary		Contaminate subsoil surrounding vault	None
		Loss of canister integrity, canister seal	Canister integrity	Vault structure	Sampling				Small release of radionuclides
Fuel recovery	Canister dropped from basket	Corroded or damaged basket	Monitor for corrosion	Handling performed by certified fuel handlers and crane operators	Loss of weight on dynamometer reading	Recover basket, then canister. Replace canister and/or basket, store in dry well	Precautions against contamination. Limit personnel exposure.	Irradiation of operating personnel	Small release of radionuclides

1. Control: Any subsequent actions that permit operations to continue on an interim basis..

It is possible, however, that a vault could have a faulty seam weld, which would allow water to enter. Even so, water would still have to penetrate the canister. If hazardous conditions do develop within a storage vault, they will develop slowly. That is, water seepage and canister corrosion must continue undetected for weeks, or probably months, before the water could contact the fuel. Likewise, gas diffusion through the small cracks in a canister seal would require considerable time to create a significant contamination problem within a storage vault. Therefore, periodic checks of the storage facility will reveal any water seepage or airborne activity before significant hazards develop. Moisture will be detected by using a portable psychrometer to determine the humidity in the vaults.

In addition to the sampling, one spare vault without any fuel provides for visual observation for any water seepage. Any hazardous conditions will be identified in time to prevent serious consequences. Thus, it is improbable that the facility will pose any threat to the environment.

Second-generation storage vaults provide better containment reliability for storage of Peach Bottom and Fermi fuels than the first-generation vaults. These vaults have welded steel bottoms rather than the grout plug. They have inner and outer shells, with the approximately 5 in. annular space between them filled with grout. The inner shell is coated on all exposed surfaces with Amercoat 741 approved equal to prevent rust and minimize decontamination efforts, if required. A cathodic protection system is also provided. The second-generation vaults have an improved system for monitoring and purging. The vault cover is bolted on to a flange on the top of the vault using a gasket for sealing.

As previously discussed, studies have indicated that the Peach Bottom baskets and fuel canisters stored in the first-generation vaults at CPP-749 are corroding. For this reason the Peach Bottom fuel will be relocated from first-generation vaults to second-generation vaults. During this relocation, a new support plate and support rod will be installed on each basket.

4.7.7.5.3 Fission Product Release. The possibility of release of radioactive material to the environment was also considered. The fuel elements, as received and stored, are encased in aluminum canisters and enclosed in the storage vaults. Leakage of the fuel canister seals, although unlikely, would be no more than a matter of pin-hole-type diffusion. Because of the lack of a significant driving force (such as a gas flow over the surface of the elements within the canisters), it is improbable that a significant amount of contamination could become airborne, diffuse out of the canisters, and escape from the vaults. If water contacted the fuel and reacted with the carbide particles, it is possible that krypton-85 could be released to the vault atmosphere and that fission products could be slowly leached from inside the vaults and deposited in the surrounding soil. It is highly improbable, however, that moisture will penetrate both the vaults and the canisters.

4.7.7.5.4 Earthquake. The INEEL design basis earthquake (DBE) has been calculated to have a maximum ground acceleration of 0.24 g.

Damage from earthquakes results from differential movement in a structure. Because each vault is independent of the other storage vaults, the facility is characterized by numerous small structures rather than a single large structure. The compact size of each vault and the materials of construction make it improbable that enough differential force could be exerted to rupture a vault. It may be possible to crack the seal between the two casings making up each vault, but the bentonite mixture used to seal the casings is self-healing upon contact with water and will reseal the vault. Thus, it is highly improbable that an earthquake would have any effect on the integrity of the storage vaults.

4.7.7.5.5 Flood. The potential for flooding the INTEC area has been evaluated.[14] A flood would be mitigated by several man-made and naturally occurring features. One man-made feature, the Mackay Dam, has a holding capacity of 45,910 acre-ft. Flood-diversion facilities also have been

constructed on the INEEL to divert potential floodwaters to four dispersion areas for holding and infiltration. Natural regulation is probably the most important flood-mitigating feature in the drainage areas that are higher than the INTEC elevation.

Various cases have been postulated as causes of a flood at the INTEC. The results of the flood evaluation show that a 10,000 year flood (to 4916.6 ft) would bring the water level to within 0.84 ft of the top of the lowest vault, 4917.34 ft.

Provisions have been made in the design of the storage facility to ensure that water would not reach the fuel. The entire storage area is backfilled with crushed rock and gravel to a height of 1.0 to 1.7 feet above the natural ground level. A 1-ft thick concrete pad is poured around each vault on top of the gravel surface. In addition, the casing for each vault extends 6 in. above the concrete pad and a carbon-steel plate will be welded (bolted, with gasket, on newer-type vaults) over the top of each vault to seal out water. Because the top of each vault is sealed and is at least 2.5 ft above INTEC grade level (4916.6 ft), the flooding conditions from the 10,000-year flood should not cause leakage of water into the storage vaults.

4.7.7.5.6 Tornado. The inherent design of the underground vaults makes them virtually impenetrable by the maximum credible tornado. Tornado launched missiles may damage the top of the vault, but they are extremely unlikely to disturb the fuel or disrupt the shielding.

4.7.7.6 Radiological Consequences. During normal operation of the underground fuel storage area, the primary radiation exposure occurs as fuel is being stored or recovered. The radiological consequences of normal operation are minimal, both within the plant and to the environment.

The radiological consequences for the transfer of Peach Bottom baskets from first-generation to second-generation vaults have been evaluated as discussed in subsection 4.7.7.2.

As described in 4.7.7.5.1, the radiological consequences of the MPA are limited to small increases in personnel exposure and are minimal, both within the plant and to the environment.

4.7.8 Engineered Safety Features

As discussed in paragraph 2 and 3 of this PSD, the safety analyses for Peach Bottom and Fermi fuels in first-generation vaults and for LWBR storage in the second-generation vaults envelope the storage of Peach Bottom and Fermi fuels in the second-generation vaults. It further states, this PSD section describes the handling and dry storage of Peach Bottom and Fermi fuels. Description of the handling and storage of LWBR fuels, and the second-generation vaults, are contained in PSD 4.7-Addendum A. Section 8 of PSD 4.7-Addendum A identifies the Engineered Safety Features (ESFs) for LWBR storage. The ESFs applicable to the storage of Peach Bottom and Fermi fuels are listed below for convenience.

ESFs 1 through 7 are applicable to both first-generation and second-generation vaults. .

1. Vault array size is designed to ensure criticality safety during normal and flooded storage conditions.

2. Spare vaults are built as additional safe storage sites should a vault fail (i.e., leak) and require repair.

3. Cask and centering devices are designed to shield fuel canisters during retrieval and transfer to a new vault.

4. Fuel handling equipment is designed, fabricated, and verified to properly secure and protect the fuel during fuel handling.

5. Vault shield plugs are designed to reduce radiation to safe levels for personnel standing at the surface of the facility.

6. A cathodic protection system is provided to minimize corrosion of the external vault surfaces.

7. Equipment (cask and centering device) is designed to retrieve the fuel following storage and to provide temporary storage.

ESFs 8 through 12 are applicable to only second-generation vaults.

8. The vault covers are flanged and bolted lids, which allow leak testing of second-generation vaults and easy access to the fuel for inspection or retrieval.

9. The vaults are constructed to completely seal the interior from the environment, and to reduce the possibility of ground or surface water entering the vaults.

10. Valved sampling lines into the second-generation vaults allow (1) monitoring the air in the vaults to determine the possible presence of radioactive contamination or of corrosion products, (2) purging vault air, (3) pressurizing the vaults for leak testing, (4) removing water, and (5) relieving excessive vault pressurization.

11. Sumps with valved lines are designed into the bottom of each vault of the second-generation type to allow sampling of the vault for liquid water and to remove it if water is found.

12. A pressure gauge is installed in each vault sampling line to permit routine monitoring of pressure. Also thermowells are installed in each vault to permit temperature monitoring.

Two ESFs listed in PSD 4.7-Addendum A are not included above because they are not applicable to the handling or storage of Peach Bottom or Fermi fuels. The first is ESF 5, which describes the use of crush pads, which while used for LWBR fuel are not used for Peach Bottom or Fermi fuels. The second is ESF 14, which requires a sign and security seal be placed on the 30-in. LWBR dry well.

4.7.9 Administrative Controls

These controls ensure that the procedural portion of the process is safe.

1. An RCT will monitor fuel retrieval and unloading operations.

2. Each vault is checked at least once every two years for the following:

   - Temperature
   - Moisture (humidity)
   - Flammable gases
   - Gases indicative to corrosion
   - Fission products.

3. Cask handling operations will not be initiated if the sustained wind velocity is greater than 25 mph. If the sustained wind speed increases to greater than 25 mph after handling activities have started, operations will only continue until a safe stopping point is reached. Continuation of operations requires the approval from an area safety representative.

4. Personnel will stand at least 5 ft away from the vault opening whenever fuel is in the vault and the shield plug is removed. The following exceptions are allowed:

   - Removal or installation of the bottom cask lid
   - Manipulation of the trunnion supports on the centering device
   - Accessing the tower platform on the centering device
   - Aligning the cask for movements in the centering device and on or off the trunnion supports
   - Performing radiation surveys
   - Adjusting the camera for performing inspections.

5. A vault will not be used for storage if any water is detected in it.

6. The cask will not be raised more than 3 ft above the pivot point on the trunnion supports of the centering device.

7. The following are performed as soon as possible after the fuel is placed in the vault:

   - The shield plug will be installed
   - The storage vault cover will be installed

8. One vault is designated as a spare and no Fermi or Peach Bottom fuels are permanently assigned to it.

9. Access to the CPP-749 area by heavy equipment and excavation is controlled. Heavy equipment with a load of greater than 50,000 lbs/tire must be controlled to no closer than 4 ft from the center of the vault.

10. A corrosion specialist will inspect the exterior portion of the vault above the ground, including the cathodic protection system, annually for the appearance of corrosion. The operability of the cathodic protection system is also checked annually.

11. All load cells will be verified to be in calibration prior to each operation that requires its use.

12. A load cell will be used during fuel lifting operations to detect possible binding of the fuel.

13. The vault will not be left unattended without the shield plug in place. For Peach Bottom fuel transfers the vault may be left unattended as described in subsection 4.7.6.2.

14. The contents of the fuel storage basket or canister must agree with the description in the INTEC Fuel Receipt Criteria in order to maintain a criticality safe facility.

15. All lifting equipment are qualified in accordance with the DOE Hoisting and Rigging Standard.

16. Personnel shall be trained for emergency response actions to minimize personnel exposures in the event that Peach Bottom or Fermi fuel is dropped during transfer.

17. During fuel transfer operations personnel radiation exposures shall be maintained As Low As Reasonably Achievable (ALARA).

NOTE: The organization titles listed below are outdated. See the "WINCO-LMITCO Organizational Cross-Reference" provided with the Technical Specifications and Standards for the correct organization titles.

4.7.10 Safety Analysis Report Assumptions for PSD 4.7, Underground Fuel Storage

I. **Technical Specifications**—None

II. **Technical Standards**

A. Safety Limits

1. Fuel shall be stored in the CPP-749 vaults under the constraints that only fuel types as listed below shall be stored and the quantity of fuel shall not exceed the values shown:

Peach Bottom I Core 1	One fuel storage basket containing a maximum of 18 canned elements
Peach Bottom I Core 2	One fuel storage basket containing a maximum of 9 canned elements
Fermi I Blanket	One 25 in. diameter stainless steel Fermi I canister

2. In the event that a fuel storage package is dropped, a recovery program shall be executed, with the concurrence of the Technical, QA, N&IS, Engineering, Plant Projects, and Production departments, and DOE-ID. This recovery program shall also assess criticality safety of the contents in order to determine whether that package can be safely stored.

B. Limiting Conditions for Operation

1. Fuel storage packages shall be transferred only to dry wells which contain no observable liquid or solid water.

2. The conditions within the vaults in the INTEC-749 area shall be controlled so that corrosion of the vaults, fuel containers, and baskets is negligible with respect to integrity of the containments and the retrieval hardware. In the event that conditions within a given vault cannot be maintained to inhibit corrosion, or inspection and evaluation shows incipient damage to the containments or to the hardware necessary for retrieval, the basket or can and contained fuel shall be transferred to a suitable storage environment.

3. In the event that analysis of the atmosphere from a given vault shows a combustible mixture of hydrogen, hydrocarbon, and oxygen or a potentially combustible composition which on dilution with air would be combustible, the atmosphere of that vault shall be purged with an inert gas until the combustible or potentially combustible composition no longer exists. Then corrective actions shall be taken, with the concurrence of the Technical, QA, N&IS, Engineering, Plant Projects, and Production departments, to reduce the reaction rate of corrosion or other process generating the combustible substance.

4. In the event that analysis of the atmosphere from a given vault shows fission product noble gas or particulate activity significantly different from background, a recovery program shall be executed, with the concurrence of the Technical, QA, N&IS, Engineering, Plant Projects, and Production departments, to safely dispose of the atmosphere and to determine and correct the source of containment failure.

5. One of the vaults in the CPP-749 storage area shall be designated as a spare and no Fermi or Peach Bottom fuels shall be permanently assigned to it.

6. Access to the CPP-749 area by heavy equipment or excavation adjacent to the vaults shall be controlled to prevent damage to the vaults or the surface features of the vaults.

C. Surveillance Requirements

1. At least every two years, sampling of the atmosphere in all vaults and analysis of the gas samples for oxygen, nitrogen, hydrogen, acetylene, helium, volatile fission products, and humidity followed by interpretation of the analytical data in terms of the extent of ongoing corrosion reactions, container integrity, and hazardous gas mixtures.

2. Surveillance by a corrosion specialist of all vaults, baskets, and containers for evidences of corrosion pertinent to fission product containment and basket retrieval.

3. Annually, inspection of the surface features of all vaults for physical damage. Any damage detected shall be corrected promptly, after evaluation in terms of containment integrity and fuel irretrievably and appropriate corrective action taken, with the concurrence of the Technical, QA, N&IS, Engineering, Plant projects, and Production departments.

III. Technical Requirements—None

IV. Other Operational Requirements

The cathodic protection system will be connected (for the movement of Peach Bottom baskets, the system may be left disconnected for up to 6 months).

4.7.11 REFERENCES

1. A. B. Christensen and E. J. Hallinan, *Final Safety Analysis Report, Storage of Unirradiated Light Water Breeder Reactor Fuel in Underground Dry Wells at ICPP*, WIN-136, December 1985.

2. R. D. Burnette, *Hydrolysis of Uranium and Thorium Carbides*, GAMD-9670, October 1969.

3. N. G. Schmahl, *On Carbide Hydrolysis*, N70-20774, March 1970.

4. W. J. Dirk, letter to D. V. Toomer, "Preliminary Corrosion Inspection of Peach Bottom Fuel, Fuel Basket, and Dry Well P-22," Dirk-50-88, December 12, 1988.

5. DOE-STD-1090, "DOE Standard Hoisting and Rigging," U.S. Department of Energy, March 1, 1999.

6. R. G. Rahl, letter to D. K. Hong, "Effect of Adjacent Surface Loads on Dry Storage Casks," RGR-01-97, January 21, 1997.

7. F. T. Wilkins, letter to M. A. Stubblefield, "CPP-749 USQ Screening for the Cathodic Protection System (CPS)," FTW-04-98, July 21, 1998.

8. G. K. Miller, letter to D. K. Hong, "Grove TM-9120 Hydraulic Boom Crane Load Effects on Dry Storage Casks," GKM-13-97, November 24, 1997.

9. F. T. Wilkins, letter to M. A. Stubblefield, "USQ Screening 98-USQ-4.7-002S," FTW-09-98, November 11, 1998.

10. J. D. Hammond, R. F. P'Pool, and R. D. Modrow, *Safety Analysis Report for Peach Bottom I Core I Fuel Storage Facility*, Internal Report IN-1465, Idaho Nuclear Corporation (June 1971).

11. R. P. Durante, letter to S. Z. Rouhani, "Normal Operating Exposure Prediction and Accident Calculation for the Peach Bottom Fuel Movement," RPD-03-97, September 3, 1997.

12. Battelle Memorial Institute, *Safety Analysis for the Shipment of Peach Bottom No. 1 Irradiated Fuel Elements in Whitehead and Kales Shipping Cask Model No. PB-1*, January 1970, pp 52-65.

13. K. D. Fielding, letter to M. J. Painter, "Hydrogen in Fermi Silo #8," KDF-1-81, January 7, 1981.

14. M. R. Niccum, Flooding Potential at the Idaho Chemical Processing Plant, 1973.