Document ID: EDF-1853
Revision ID: 1

Engineering Design File

PROJECT FILE NO. 020996

Project Survey Control for the SSSTF

Prepared for:
U.S. Department of Energy
Idaho Operations Office
Idaho Falls, Idaho

INEEL
Idaho National Engineering & Environmental Laboratory
BECHTEL BWXT IDAHO, LLC

Form 412.14
10/05/99
Rev. 02

ENGINEERING DESIGN FILE

Project File No. 020996
EDF Serial No. EDF-1853
Functional File No. N/A

PROJECT/TASK Staging, Storage, Sizing and Treatment Facility (SSSTF)

SUBTASK Survey Control for the SSSTF

EDF Page No. 1 of 1

TITLE: **Project Survey Control for the SSSTF**

SUMMARY: Survey control for the design and construction of SSSTF and ICDF Landfill projects will use the same survey datum. Horizontal control will utilize Project Coordinates and vertical control will be NGVD 29 (National Geodetic Datum of 1929). Project Coordinates are derived from State Plane Coordinates using the North America Datum of 1927 (NAD 27 Idaho East Zone) using an appropriate scale factor. True ground distances can be established using Project Coordinates. The attached tables give a listing of the Project Coordinates for the survey control points.

- Table 1 gives a listing of State Plane, Project and INTEC Site Specific Coordinates on the control points used inside the INTEC fence. The conversion notes with this table shows how to convert from State Plane to INTEC Site Specific and from State Plane to Project Coordinates. Historically, survey control inside the INTEC plant has been based on Site Specific Coordinates. Survey control outside the INTEC fence are Project Coordinates. The purpose of converting to Project Coordinates inside the fence was to use the same datum inside as outside the INTEC fence.
- Table 2 gives a listing of State Plane and Project Coordinates for existing survey control points outside the INTEC fence.
- Table 3 gives a listing of State Plane and Project Coordinates for new and additional control points established for ~~the use~~ on the ICDF/SSSTF projects.

A map showing the location of the control points is also attached.

QUALITY LEVEL ☐ 1 ☐ 2 ☒ 3

KEYWORDS (e.g. area, structure no., general subject matter, etc.): SSSTF, ICDF, Survey Control, Horizontal, Vertical

AUTHOR/P.E. STAMP

PROFESSIONAL ENGINEER-LAND SURVEYOR REGISTERED 2104 3-21-01 STATE OF IDAHO CLINTON O. KINGSFORD

Distribution (complete package):
C. O. Kingsford, C. J. Hurst, R. L. Davison, K. D. Fritz, K. V. Beard

Distribution (cover sheet only):
S. A. Davies

Checked	DATE	Approved/Accepted	DATE
K. V. Beard	3.22.01	S. L. Austad	3/22/01
BBWI Review	DATE	BBWI Review	DATE
S. A. Davies			3/27/01

Table 1 - CONTROL POINTS INSIDE OF INTEC COORDINATES

CONTROL POINT	NAD27 NORTH	NAD27 EAST	PROJECT NORTH	PROJECT EAST	SITE SPECIFIC NORTH	SITE SPECIFIC EAST	NGVD29 ELEV	SITE SPECIFIC ELEV	DESCRIPTION. See Sketch for R in Bury
FH99	693863.117	296102.158	694030.040	296173.391	693861.567	296099.554	4916.98	4918.06	FIRE HYDRANT (R IN BURY)
CPP1	694732.058	296101.543	694899.190	296172.776	694730.710	296099.213	4915.83	4916.91	CPP-MW-1 BRASS CAP
FH74	694220.865	296101.894	694387.874	296173.127	694219.398	296099.403	4916.24	4917.32	FIRE HYDRANT (R IN BURY)
PIV1	693256.022	296246.108	693422.799	296317.376	693254.287	296243.346	4920.25	4921.33	X IN TOP OF PIV (See Sketch)
PK01	693416.853	296102.671	693583.668	296173.904	693415.200	296099.927	4917.99	4919.07	PK NAIL
OO72	692845.311	296692.428	693.011.989	296763.803	692843.340	296689.640	4916.10	4917.18	BRASS CAP SE OF 603

COORDINATE CONVERSION NOTES

There are 4 datums for horizontal survey control inside the INTEC fence. They are:
- -INTEC Site Specific
- -State Plane Coordinates classified as North America Datum of 1927 (NAD 27 - Idaho East Zone)
- -State Plane Coordinates classified as North American Datum of 1983 (NAD 83 - Idaho East Zone)
- -Project Coordinates which represent true ground distances

For the purpose of this project NAD 83 will not be used. Following is the procedure to convert from one coordinate datum to another. It should be noted that Project Coordinates are being used for the design and construction of the ICDF/SSSTF projects.

STATE PLANE TO INTEC SITE SPECIFIC (HORIZONTAL) COORDINATES

TRANSLATION

-Use INTEC Control Point #0072. This is a Brass Cap located southeast of CPP 603 in the fence line.
- -North 692845.311 East 296692.428 NAD 27, Idaho East Zone, State Plane Coordinates
- -North 692843.34 East 296689.64 INTEC Site Specific Coordinates of Control Point (CP) #72

ROTATION

-Rotate around Control Point #0072 clockwise 0°01'05".

SCALE

-Use scale factor of 1.00024057 with Control Point #0072 as reference location.

STATE PLANE COORDINATES TO PROJECT (HORIZONTAL) COORDINATES

Multiply NAD 27, Idaho East Zone, State Plane Coordinates by 1.00024057 (Reciprocal of combined factor at control Point 0072) to get Project Coordinates.

NGVD 29 TO CPP SITE SPECIFIC (VERTICAL)

Add 1.08 ft to NGVD 29 elevation to get INTEC Site Specific Elevation.

REV One 3.21.2001

Table 2 - CONTROL POINTS OUTSIDE OF INTEC COORDINATES

CONTROL POINT	NAD27 NORTH	NAD27 EAST	PROJECT NORTH	PROJECT EAST	NGVD 29 ELEV	DESCRIPTION
431L	694344.373	295493.722	694511.411	295564.809	4916.75	NGS MARK 431L
GS44	694237.225	295251.303	694404.238	295322.332	4917.91	USGS 44 WELL BRASS CAP
GS45	693599.907	295494.260	693766.766	295565.347	4919.04	USGS 45 WELL BRASS CAP
GS46	694024.912	295725.057	694191.874	295796.200	4919.14	USGS 46 WELL BRASS CAP
GS57	691753.301	294871.210	691919.716	294942.147	4922.50	USGS 57 WELL BRASS CAP
S123	692520.614	295779.471	692687.214	295850.627	4919.22	USGS 123 WELL BRASS CAP
SP10	692210.459	296207.290	692376.984	296278.549	4917.89	SWPP 10 WELL BRASS CAP
SPW6	692697.048	295151.080	692863.690	295222.085	4920.59	PW6 WELL BRASS CAP
SNEA	692809.566	294527.858	692976.235	294598.713	4922.12	SNEAK REBAR WITH CAP

Table 3 - ICDF SURVEY CONTROL POINTS COORDINATES

CONTROL POINT	NAD27 NORTH	NAD27 EAST	PROJECT NORTH	PROJECT EAST	NGVD29 ELEV	DESCRIPTION
1522	692293.671	294960.368	692460.216	295031.327	4921.96	SPT-2 BRASS CAP
1526	692751.249	294782.779	692917.904	294853.695	4921.63	SPT-1 BRASS CAP
1530	692721.513	295318.927	692888.161	295389.972	4919.28	CHEMB-1 BRASS CAP
1534	692266.703	295247.905	692433.242	295318.933	4921.24	GSB-1 BRASS CAP
1538	691961.041	295206.922	692127.506	295277.940	4920.93	CHEMB-2 BRASS CAP
1542	691068.770	294876.746	691235.020	294947.685	4923.10	CHEMB-3 BRASS CAP
1546	691608.410	295119.791	691774.790	295190.788	4921.91	SPT-3 BRASS CAP
1550	691275.321	295210.477	691441.621	295281.496	4922.06	GSB-2 BRASS CAP
1554	691043.307	295298.245	691209.551	295369.285	4922.68	SPT-5 BRASS CAP
1558	691288.752	294745.657	691455.055	294816.564	4923.17	SPT-4 BRASS CAP

COORDINATE CONVERSION NOTES

-NAD 27 is the North American Datum of 1927 - State Plane Coordinate (Idaho East Zone)
-NGVD 29 is the National Geodetic Vertical Datum of 1929 (NGVD 29)
-Project coordinates are obtained by multiplying the NAD 27 coordinates by the reciprocal of the combined factor at control point 0072 (1.00024057)
REV One 3.21.01

CONTROL POINTS INSIDE OF INTEC

EDF-1853

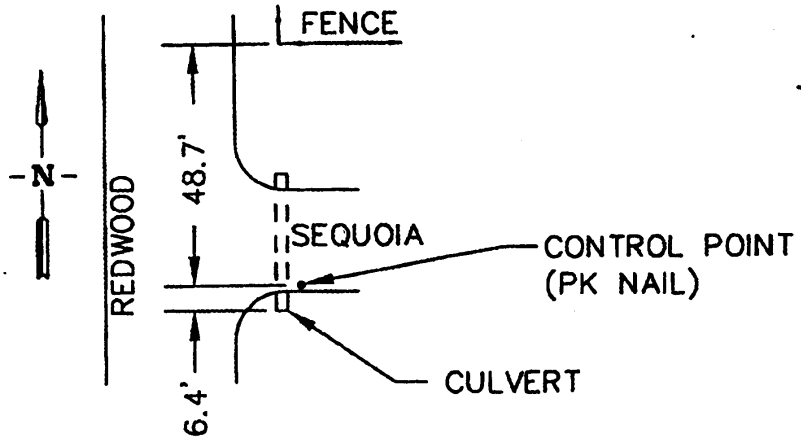

PK01

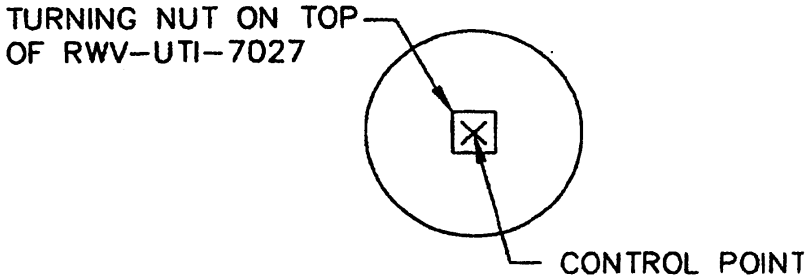

PIV1

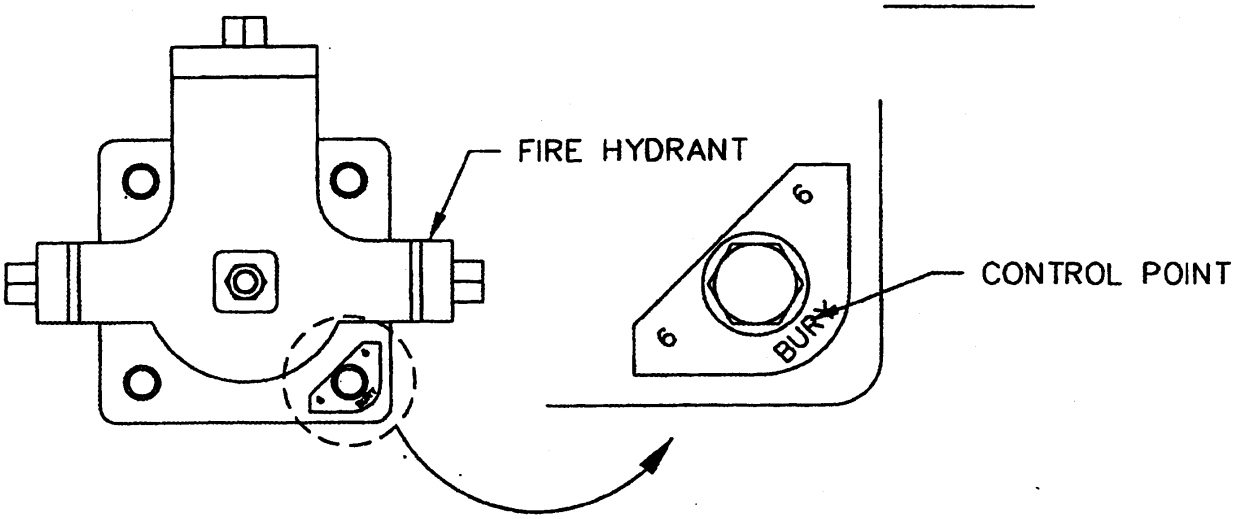

FH74 AND FH99

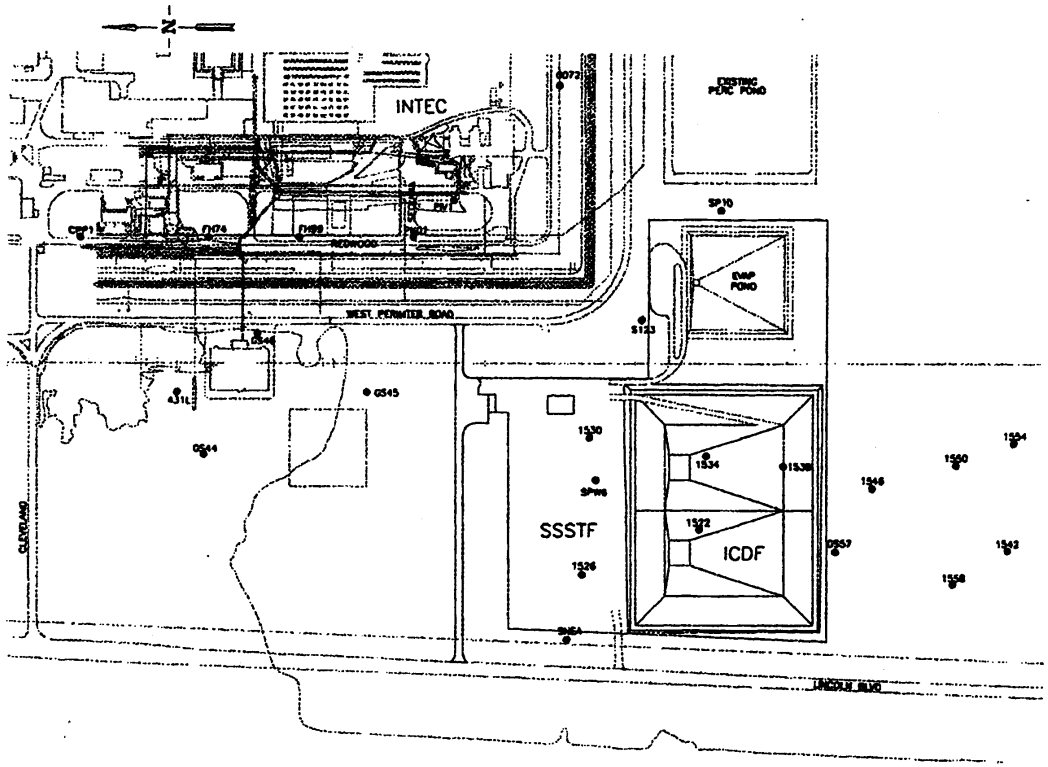

SURVEY CONTROL POINT PLAN

SURVEY CONTROL POINTS

CONTROL POINT	PROJECT NORTHING	PROJECT EASTING	NGVD29 ELEV	DESCRIPTION
431L	694,511.411	295,564.809	4918.75	NGS MARK 431L
0544	694,404.238	295,322.332	4917.91	USGS 44 WELL BRASS CAP
0545	693,766.796	295,565.347	4919.04	USGS 45 WELL BRASS CAP
0546	694,181.874	295,796.200	4919.14	USGS 46 WELL BRASS CAP
0557	691,918.716	294,942.147	4922.50	USGS 57 WELL BRASS CAP
S123	692,697.214	295,850.627	4919.22	USGS 123 WELL BRASS CAP
SP10	693,376.864	296,276.546	4917.89	SWPP 10 WELL BRASS CAP
SPW6	692,863.980	295,222.085	4920.59	PW6 WELL BRASS CAP
FH99	694,030.040	296,173.391	4916.88	FIRE HYDRANT SOUTH OF PONDEROSA (R IN BURY)
CPP1	694,699.190	296,172.776	4915.83	CPP-MW-1 WELL BRASS CAP
FH74	694,387.874	296,173.127	4916.24	FIRE HYDRANT 1074 (R IN BURY)
PW1	693,422.799	296,317.376	4920.25	X IN TOP OF PW
PW01	693,563.068	296,173.904	4917.99	PK NAIL
SNEA	692,976.235	294,998.713	4922.12	SNEAK REBAR WITH YELLOW CAP
0072	693,011.988	296,763.803	------	SURVEY CONTROL MONUMENT
1522	692,460.216	295,031.327	4921.96	SPT-2 BRASS CAP (ICPP-BOR-S-181)
1526	692,017.904	294,853.695	4921.63	SPT-1 BRASS CAP (ICPP-BOR-S-180)
1530	692,688.181	295,388.972	4919.28	CHEMB-1 BRASS CAP (ICPP-BOR-S-175)
1534	692,433.242	295,316.833	4921.24	GSB-1 BRASS CAP (ICPP-BOR-S-176)
1538	692,127.506	295,277.940	4920.63	CHEMB-2 BRASS CAP (ICPP-BOR-S-178)
1542	691,236.028	294,947.685	4923.10	CHEMB-3 BRASS CAP (ICPP-BOR-S-177)
1546	691,774.790	295,190.788	4921.91	SPT-3 BRASS CAP (ICPP-BOR-S-182)
1550	691,441.621	295,281.496	4922.06	GSB-2 BRASS CAP (ICPP-BOR-S-179)
1554	691,209.551	295,389.285	4922.88	SPT-5 BRASS CAP (ICPP-BOR-S-184)
1558	691,456.056	294,816.564	4923.17	SPT-4 BRASS CAP (ICPP-BOR-S-183)

NOTES

1. PROJECT COORDINATES ARE BASED ON NAD27 IDAHO EAST ZONE STATE PLANE, CORRECTED FOR ELEVATION AND GRID. TO CONVERT PROJECT COORDINATES TO STATE PLANE, DIVIDE PROJECT COORDINATES BY 1.00024057.
2. VERTICAL DATUM IS NGVD29.
3. FOR MORE INFORMATION ON COORDINATE SYSTEMS SEE EDF-1853.

REV	DESCRIPTION	EFFECTIVE DATE

INEEL

INTEC

SSSTF UTILITIES

SURVEY CONTROL POINT PLAN

D 01MF3 FACILITIES & UTILITIES PROJECT

SCALE: 1" = 200'

SHEET C-1

DESIGN PHASE: 90%

QUALITY LEVEL: 3

DESIGNED: S.A. BINKS

DRAWN: MELANIE SHORER

CHECKED: BOBI BRANDON

PROJECT NO: 22099