Document ID: EDF-4379
Revision ID: 0
Effective Date: 03/29/04

Engineering Design File

PROJECT FILE NO. 23048

Baseline Estimate of the Volume of Remote Handled Transuranic Waste Stored at the Radioactive Waste Management Complex

Idaho National Engineering and Environmental Laboratory

Form 412.14
10/9/2003
Rev. 05

ENGINEERING DESIGN FILE

EDF No.: 4379 EDF Rev. No.: 0 Project File No.: 23048

1. Title: Baseline Estimate of the Volume of Remote Handled Transuranic Waste Stored at the Radioactive Waste Management Complex

2. Index Codes:
Building/Type WMF 714 SSC ID N/A Site Area RWMC

3. NPH Performance Category: _____ or ☒ N/A

4. EDF Safety Category: _____ or ☒ N/A SCC Safety Category: _____ or ☒ N/A

5. Summary: This engineering design file (EDF) estimates a baseline inventory volume of remote handled transuranic (RH-TRU) waste stored at the Radioactive Waste Management Complex (RWMC). Included in this EDF is RH-TRU waste, "suspect" RH-TRU waste, and remote handled (RH) waste that is managed as RH-TRU waste even though the waste is not TRU.

There are four laboratory facilities external to the Idaho National Engineering and Environmental Laboratory, (INEEL) and two facilities within the INEEL that generated RH-TRU waste stored at the RWMC. The external laboratories are: (1) Argonne National Laboratory-East, (2) Argonne National Laboratory-West, (3) Bettis Atomic Power Laboratory, and (4) the Naval Reactor Facility. The internal facilities are the Test Reactor Area and Idaho Nuclear Technology and Engineering Center. A total volume of 129 m^3 of RH-TRU waste has been sent to RWMC for temporary storage from 1976 through 1996.

"Suspect" RH-TRU waste is lead lined containers that may or may not be RH. Lead lining is used for safe handling to reduce the contact dose rate. Therefore the unshielded contact dose rate is unknown and the container may or may not meet the definition of RH-TRU. Rocky Flats Environmental Technology Site shipped lead shielded containers during the 1970s and 1980s. The majority of the "suspect" RH-TRU waste is under BNFL control. The estimate of the total volume of "suspect" RH-TRU waste is 303 m^3.

In addition to RH-TRU and "suspect" RH-TRU waste, there is a special category of waste that is contaminated with U-233 and may be remote handled but is not TRU waste, although it is managed as RH-TRU waste. Bettis Atomic Power Laboratory shipped U-233 contaminated waste from 1973 through 1987 to the RWMC. The ultimate disposal facility for this waste is currently unknown. The estimate of the total volume is 52 m^3 for the U-233 contaminated waste managed as RH-TRU.

6. Review (R) and Approval (A) and Acceptance (Ac) Signatures:
(See instructions for definitions of terms and significance of signatures.)

	R/A	Typed Name/Organization	Signature	Date
Performer/ Author	N/A	Cecilia R. Hoffman/4642 Physicist	C. R. Hoffman	3/24/04
Technical Checker	R	Rita Wells/48B1 Programmer/Analyst	Rita Wells	3/24/04
Independent Peer Reviewer	R	Pui Kuan/3K13 Nuclear Engineer	Pui Kuan	3/24/04
Approver	A	Robert J. Waters/3F10 Project Manager	Robert J. Waters	3/25/04
Requestor	Ac	Raj N. Bhatt/3F10 Project Engineer	Rajiv N. Bhatt	3/24/04
Doc. Control	Ac	Juana Cruz	Juana Cruz	~~3/26/04~~ 3/29/04

EDF No.: 4379 EDF Rev. No.: 0 Project File No.: 23048

1. Title: Baseline Estimate of the Volume of Remote Handled Transuranic Waste Stored at the Radioactive Waste Management Complex

2. Index Codes:
Building/Type WMF 714 SSC ID N/A Site Area RWMC

7. Distribution: (Name and Mail Stop)
R. N. Bhatt/MS 2414, C. R. Hoffman/MS 3710, P. Kuan/MS 3885, David Griggs/MS 4202 , David Morgan/MS 4202, M. J. Sherick/MS 2510, R. J. Waters/MS 2510

Summary page only: Herbert Bohrer (NE-ID)/MS 4209, Christian Natoni (NE-ID)/MS 4209, Steven Davies/MS 3920, John Schaffer/MS 4209, Ed Ziemianski (NE-ID)/MS 4209

8. Does document contain sensitive unclassified information? ☐ Yes ☒ No
If Yes, what category:

9. Can document be externally distributed? ☒ Yes ☐ No

10. Uniform File Code: 6150 Disposition Authority: ENV1-j-1
Record Retention Period: Cut off when superceded, obsolete, or cancelled

11. For QA Records Classification Only: ☐ Lifetime ☒ Nonpermanent ☐ Permanent
Item and activity to which the QA Record apply:

12. NRC related? ☐ Yes ☒ No

13. Registered Professional Engineer's Stamp (if required) N/A

CONTENTS

ACRONYMS 6

1. INTRODUCTION 9

2. BACKGROUND 9

2.1 Remote Handled Transuranic Waste Generators 10

2.1.1 Argonne National Laboratory-East 10
2.1.2 Argonne National Laboratory-West 11
2.1.3 Bettis Atomic Power Laboratory 12
2.1.4 Naval Reactor Facility 12
2.1.5 Test Reactor Area 13
2.1.6 Idaho Nuclear Technology and Engineering Center 13

2.2 "Suspect" Remote Handled Transuranic Waste 14

2.3 Remote Handled Waste Managed as Remote Handled Transuranic Waste 14

3. REMOTE HANDLED TRANSURANIC WASTE INVENTORY 14

3.1 Argonne National Laboratory-East 15

3.1.1 30-Gal Drum Inventory 15
3.1.2 Bin Inventory 16

3.2 Argonne National Laboratory-West 17

3.3 Bettis Atomic Power Laboratory 18

3.4 Naval Reactors Facility 19

3.5 Test Reactor Area 20

3.6 Idaho Nuclear Technology and Engineering Center 20

4. "SUSPECT" REMOTE HANDLED TRANSURANIC WASTE INVENTORY 21

4.1 Database History 21

4.2 Data 22

5. REMOTE HANDLED WASTE MANAGED AS REMOTE HANDLED TRANSURANIC WASTE 24

6. CONCLUSION 25

7. REFERENCES 26

Appendix A-Argonne National Laboratory-East 29

Appendix B-Argonne National Laboratory-West 59

Appendix C-Bettis Atomic Power Laboratory 63

Appendix D-Naval Reactor Facility 93

Appendix E-Test Reactor Area 97

Appendix F-Idaho Nuclear Technology and Engineering Center 101

Appendix G-"Suspect" Remote Handled Transuranic Waste 105

FIGURES

Figure 1. Argonne National Laboratory-East remote handled transuranic waste configuration. 11

Figure 2. Argonne National Laboratory-West insert configuration. 12

Figure 3. Naval Reactor Facility remote handled transuranic waste configuration. 13

TABLES

Table 1. The volume of remote handled transuranic waste. 15

Table 2 The volume of Argonne National Laboratory-East remote handled transuranic waste. 15

Table 3. The volume of Argonne National Laboratory-West remote handled transuranic waste. 18

Table 4. The volume of Bettis Atomic Power Laboratory remote handled transuranic waste..... 19

Table 5. The volume of Naval Reactor Facility remote handled transuranic waste. 19

Table 6. The volume of Test Reactor Area remote handled transuranic waste. 20

Table 7. The volume of Idaho Nuclear Technology and Engineering Center remote handled transuranic waste. 21

Table 8. Rocky Flats Environmental Technology Site lead containing drums identified by database queries. 22

Table 9. The volume of Rocky Flats Environmental Technology Site "suspect" remote handled transuranic waste. 24

Table 10. Bettis Atomic Power Laboratory U-233 contaminated waste. 25

Table 11. Baseline inventory volume of waste. 25

Table A-1. Argonne National Laboratory-East remote handled transuranic waste in 30-gal drums..... 31

Table A-2. Argonne National Laboratory-East remote handled transuranic waste in bins. 58

Table B-1. Argonne National Laboratory-West remote handled transuranic waste..... 61

Table C-1. Bettis Atomic Power Laboratory remote handled transuranic waste. 65

Table C-2. Bettis Atomic Power Laboratory U-233 contaminated waste inventory. 66

Table D-1. Naval Reactor Facility remote handled transuranic waste. 95

Table E-1. Test Reactor Area remote handled transuranic waste..... 99

Table F-1. Idaho Nuclear Technology and Engineering Center remote handled transuranic waste. 103

Table G-1. Rocky Flats Environmental Technology Site "suspect" remote handled transuranic lead shielded containers except for the projected inventory. 107

ACRONYMS

ANL-E	Argonne National Laboratory-East
ANL-W	Argonne National Laboratory-West
BAPL	Bettis Atomic Power Laboratory
DMS	Data Management System
DOE	Department of Energy
Form 5480.1A	US DOE Off-Site Radioactive Material Shipment Record, DOE 5480.1A
EDF	engineering design file
FRP	fiberglass reinforced polyester
Form ID-135	Radioactive Waste Form, ID-135
Form ID-137	Transuranic Waste Container Form, ID-137
Form 5820.2	Stored, Disposed, or Processed Solid Radioactive Waste Form, ID F 5820.2
Form 5820.2A	Transuranic Waste Data Base Input Form, ID F 5820.2A
ID	identification
IDC	item description code
ILTSF	Intermediate-Level Transuranic Storage Facility
INEEL	Idaho National Engineering and Environmental Laboratory
INTEC	Idaho Nuclear Technology and Engineering Center
NRF	Naval Reactor Facility
Pack Sheet	A packaging and survey form generated at the Alpha Gamma Hot Cell Facility at Argonne National Laboratory-East.
PVC	polyvinyl chloride
RCRA	Resource Conservation and Recovery Act
RFETS	Rocky Flats Environmental Technology Site
RH	remote handled
RH-TRU	remote handled transuranic

RWMC	Radioactive Waste Management Complex
RWMIS	Radioactive Waste Management Information System
TCWCIS	Transuranic Contaminated Waste Container Information System
TRA	Test Reactor Area
TRIPS	Transuranic Reporting, Inventory, and Processing System
TRU	transuranic
TSA	Transuranic Storage Area
TSA-RE	Transuranic Storage Area-Retrieval Enclosure
TWMIS	Transuranic Waste Management Information System
TWPD	Transuranic Waste Package Data
WART	waste analysis report tracking
WIPP	Waste Isolation Pilot Plant
WSP	waste stream profile form/information

This page is intentionally left blank.

Baseline Estimate of the Volume of Remote Handled Transuranic Waste Stored at the Radioactive Waste Management Complex

1. INTRODUCTION

The disposition of remote handled transuranic (RH-TRU) waste is currently the responsibility of the Idaho National Engineering and Environmental Laboratory (INEEL) Management and Operating contractor. Per the *State of Idaho Settlement Agreement* of October 1995, the disposition of RH-TRU waste must be completed by the target date of December 31, 2018. This engineering design file (EDF) estimates the baseline inventory volume for remote handled transuranic (RH-TRU) waste, the "suspect" RH-TRU waste, and the special category of waste that is remote handled (RH) waste managed as RH-TRU even though the waste is not TRU. This last category of waste is being placed in this EDF for completeness because the Department of Energy (DOE) is required to dispose of this legacy waste and the most likely disposal site to date is WIPP.

TRU waste contains more than 100 nCi per gram of waste of alpha-emitting TRU isotope(s) with a half-life greater than 20 years [1]. RH TRU waste is transuranic waste that has a measured radiation dose rate at the container surface of greater than 200 mR/hr that is not (1) high-level radioactive waste, (2) waste that has been determined to not need the degree of isolation required by disposal regulations, or (3) waste the Nuclear Regulatory Commission has approved for disposal on a case-by-case basis in accordance with 10 CFR Part 61 [2].

The effort to ship TRU waste to WIPP is being driven by the Idaho Settlement Agreement that was entered into in 1995 with the State of Idaho, the Department of Energy, and the United States Navy. This multifaceted legal document requires DOE to remove all forms of radioactive waste from the INEEL. One aspect of that agreement is to remove 65,000 m^3 TRU waste prior to December 31, 2018 [3]. RH-TRU waste falls into this category.

Several reference sources have been reviewed and correlated to identify the current volume of inventory in storage at the RWMC. To update the baseline inventory volume, information was cross referenced from the Transuranic Reporting Inventory & Processing System (TRIPS), the Transuranic Contaminated Waste Container Information System (TCWCIS), the Radioactive Waste Management Information System (RWMIS), WASTE, characterization and shipment records, the Intermediate-Level Transuranic Storage Facility (ILTSF) vault records, and several internal documents published concerning the waste inventory at RWMC.

2. BACKGROUND

The RWMC was established in 1952 as a controlled area for the burial of solid radioactive wastes generated by INEEL operations [4]. The RWMC consists of two main waste storage and disposal areas: the Subsurface Disposal Area and the Transuranic Storage Area (TSA). The TSA was established in 1970 for retrievable storage of contact-handled TRU contaminated waste. In November 1976, the ILTSF was established for retrievable storage of RH-TRU waste.

TRU waste containers at the RWMC are generally known to contain laboratory trash, rags, paper, and sources for grouted forms of plutonium or americium process residue materials. There are three

categories of waste stored at the RWMC that this EDF addresses: 1) RH-TRU waste, 2) "suspect" RH-TRU waste, and 3) RH waste managed as RH-TRU waste.

2.1 Remote Handled Transuranic Waste Generators

There are four laboratory facilities external to the INEEL and two facilities within the INEEL that generated RH-TRU waste. The external laboratory facilities are: 1) Argonne National Laboratory East (ANL-E), 2) Argonne-National Laboratory-West (ANL-W), 3) Bettis Atomic Power Laboratory (BAPL), and 4) the Naval Reactor Facility (NRF). The internal facility generators are the Test Reactor Area (TRA) and the Idaho Nuclear Technology and Engineering Center (INTEC). A total of 705 RH TRU waste containers were sent to RWMC for temporary storage from 1976 through 1996.

2.1.1 Argonne National Laboratory-East

Argonne National Laboratory-East generated RH-TRU waste as a result of the destructive examination of experimental fuel and associated materials at the Alpha Gamma Hot Cell Facility between 1976 and 1995 [5, 6, 7, 8, 9, 10, 11, 12, 13]. The waste was shipped in 30-gal drums and bins [14, 15]. A brief summary of the waste is presented.

The experimental fuel belonged to various DOE reactor programs. The fuel was irradiated mostly in the Experimental Breeder Reactor-II at ANL-W. However, it could have been irradiated in various other fast or light water reactors in the DOE complex. Upon irradiation, the fuel, targets and reactor structural materials were sent to the ANL-E for destructive and nondestructive examination. Examination of these materials occurred from 1976 through 1995. Upon completion of the examination, the waste (not fuel) was packaged for shipment to INEEL for temporary storage. The waste was primarily stored in the underground vaults at ILTSF [16].

2.1.1.1 30 Gal Drum Inventory

Six hundred and seventeen (617) 30-gal drums were sent to the INEEL from 1976 through 1995. The contents of the waste drums consisted of item description code (IDC) 104 and 107, which were generated at the Alpha Gamma Hot Cell Facility. The waste was generally packaged into two 7.5-gal pails that were placed in a 30-gal drum [17]. A typical ANL-E waste drum is a 30-gal drum, containing a high-density polyethylene liner, a fiber drum pouch spreader, two polyvinyl chloride (PVC) bags, a polyethylene disc, and two 7.5-gal pails. Figure 1 illustrates the RH-TRU ANL-E waste configuration. The contact dose rates at the time of shipment ranged from 200 mR/hr to 30 R/hr at contact.

2.1.1.2 Bin Inventory

Argonne National Laboratory-East inventory also includes 13 bins as part of the RH-TRU inventory [14, 15]. There are 7 IDC 100 bins and 6 IDC 104 bins that have been identified as being stored at the RWMC.

The general plant waste, IDC 100, consists of a mixture of combustible and noncombustible waste such as paper, rags, plastic bottles, hand tools, and metal cans. Reference 14 lists 7 bins that were shipped to the INEEL; each bin is identified by name, shipment number, and contact dose rate. The bins are MIII bin-steel, generated prior to 1981. The waste was packaged in a 5-gal paint cans or in a 17H 55-gal drum. The 5-gal paint can was placed directly in the bin or inside of a 55-gal drum. The inside of the drum or paint can with the waste may be double contained in plastic; contained in a 4-in. diameter by 8-in. high aluminum can; or contained in ½-gal or 1-gal metal cans or contained in polyethylene bottles. The waste

was placed loosely in the bin or placed in a ½-size or full-size plywood boxes then placed in the bin [14].

The Alpha Gamma Hot Cell Facility combustible waste, IDC 104, is discussed in Section 2.1.1.1 of this document. Reference 15 identifies 6 bins that were sent to the INEEL in 1982 from ANL-E. All waste generated as IDC 104 is considered RH-TRU waste, therefore the bins are part of the RH-TRU inventory. The bins are assumed to be MIII bin-steel generated prior to 1981.

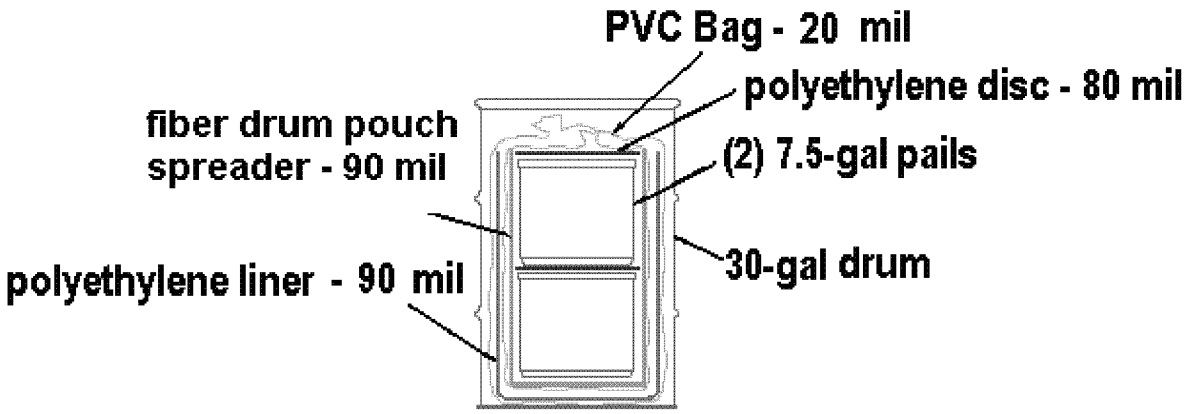

Figure 1. Argonne National Laboratory-East remote handled transuranic waste configuration.

2.1.2 Argonne National Laboratory-West

Argonne National Laboratory-West generated 32 waste containers of RH-TRU waste from 1978 through 1988. The waste was sent in inserts with the exception of four 55-gal drums [18].

The waste was generated from the destructive examination of fuel in the Hot Fuel Examination Facility, buildings ANL-765 and ANL-785. The fuel was irradiated in the Experimental Breeder Reactor-II. The waste is IDC 150, 152, 153, and 160 [19, 18]. Laboratory wastes, IDC 150, consists of both combustible and noncombustible laboratory waste. Plutonium neutron sources, IDC 152, consist of operating equipment from the hot cells, combustible material, and metals. Laboratory waste-combustible, IDC 153, consists of operating equipment from hot cells, combustible material, and metal. Analytical Chemistry and metallographic combustibles is IDC 160. These waste containers are currently stored in the underground vaults at the ILTSF. An ANL-W insert consists of two concentric cylindrical canisters. The waste is placed in a canister, which is placed inside another canister. The canisters are approximately 1-ft. in diameter by 6-ft. in length. An insert configuration is shown in Figure 2. An insert weighs approximately 450 lb.

Reference 18 indicates that IDCs 150, 152, and 153 wastes were shipped as inserts from ANL-W to the RWMC for temporary storage. However, a query of TRIPS and a review of the shipment forms indicate there is one insert with IDC 160 that was sent to RWMC from ANL-W. The insert is ANL-88130.

In 1988 ANL-W shipped 4 RH-TRU 55-gal drums to RWMC for storage. The waste is IDC 161 and is comprised of glassware, paper, polyethylene, and miscellaneous laboratory waste. This waste is currently stored in the underground vaults at ILTSF [16].

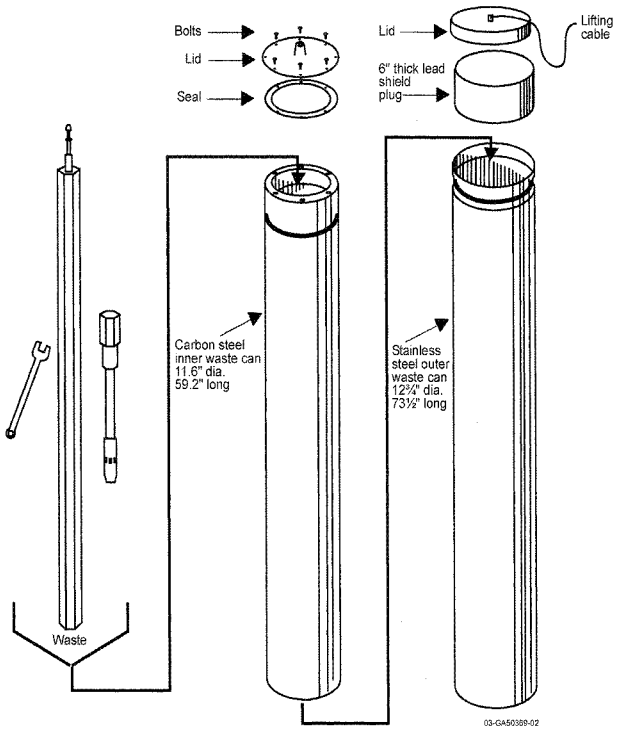

Figure 2. Argonne National Laboratory-West insert configuration.

2.1.3 Bettis Atomic Power Laboratory

In 1988 BAPL via ANL-W sent 2 inserts to RWMC for temporary storage [19]. This waste is IDC 030, solidified grinding sludge, etc. This waste was generated in the L-Building Fuel Manufacturing Facility. It consists of abrasive materials from grinding wheels, includes dust, aluminum oxide and carborundum and rubber and was packaged either as a powder or cake [15]. These waste containers are currently stored in the underground vaults at ILTSF. The waste configuration is shown in Figure 2.

2.1.4 Naval Reactor Facility

From 1977 through 1981 NRF sent RH-TRU waste to the RWMC for temporary disposal. These 27 waste containers are 30-gal drums stored in the underground storage vaults at ILTSF. NRF sent IDC 153, "laboratory wastes–combustible," generated from Building 618 of the Expended Core Facility. The waste includes process equipment, containers, and combustible materials [14].

The waste configuration consists of two 6-gal pails/canisters that are heat-sealed in a 20-mil PVC bag. The heat-sealed bag is then placed in a 100-mil PVC drum liner, which is placed in a 20-mil PVC bag. The outside PVC bag is sealed and placed in a 30-gal drum. The waste configuration is shown in Figure 3.

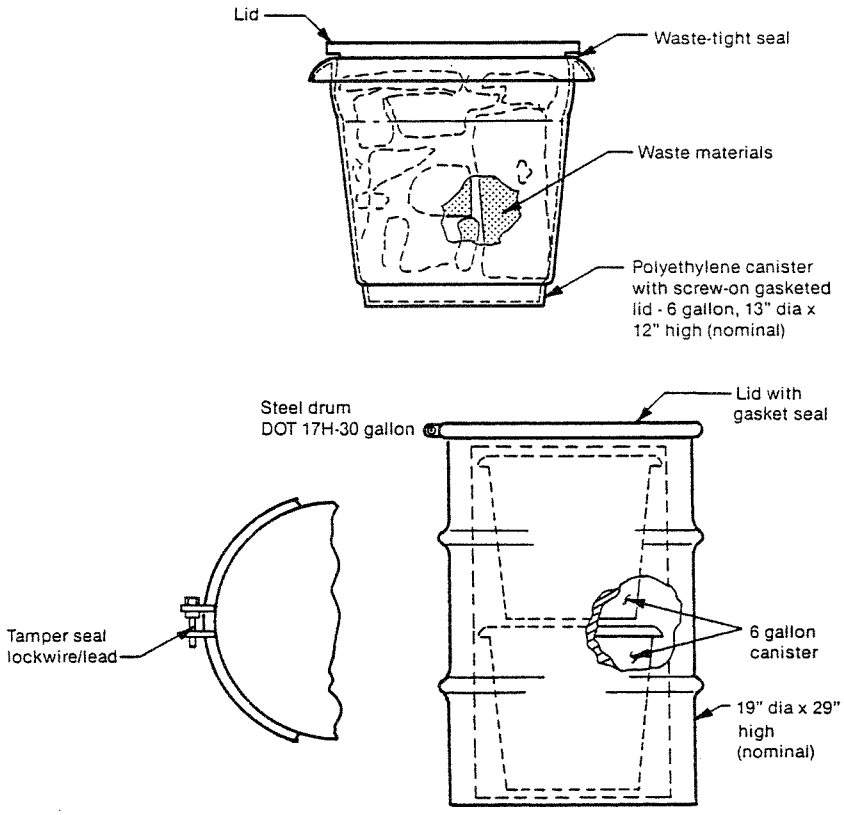

Figure 3. Naval Reactor Facility remote handled transuranic waste configuration.

2.1.5 Test Reactor Area

There were 3 shipments of TRA RH-TRU waste to the RWMC from 1990 through 1996, for a total of 25 waste containers. The waste was shipped in 55-gal drums. In 1990, 10 drums of waste from the drains of TRA Hot Cells and the Alpha Wing Laboratories were sent for disposal [20]. In 1994, 14 drums of RH-TRU waste were sent from the Advanced Test Reactor at TRA to the RWMC. The waste was resin from the mixed bed ion exchange columns at TRA 605 [21]. The last shipment, a 55-drum, occurred in 1996. This waste is currently stored in the underground storage vaults at ILTSF [16].

2.1.6 Idaho Nuclear Technology and Engineering Center

One shipment of two-30-gal drums RH-TRU waste was sent to RWMC for temporary disposal in 1978. The waste is IDC 151, Solidified Fuel Sludge. The waste is stored at ILTSF in the underground storage vaults at ILTSF [16]. The waste was sent from INTEC Building 627 [18].

The waste was generated from the analysis of fuel irradiated at the commercial power reactor H.B. Robinson. An acid base solution was used to dissolve approximately one-half of the fuel rod. The waste consists of glass, plastics, and metal, miscellaneous laboratory equipment, and diatomaceous earth. The bottled wastes are in a sealed can(s), which was (were) placed in plastic bag. The bag was then placed in a lead-lined 30-gal drum [14].

2.2 "Suspect" Remote Handled Transuranic Waste

A special category of waste stored at RWMC is labeled as "suspect" RH-TRU waste. This is TRU waste that may or may not be RH because of lead shielding inside the container. Rocky Flats Environmental Technology Site (RFETS) is assumed to be the only generator of "suspect" RH-TRU waste. "Suspect" RH-TRU waste was shipped during the 1970s and 1980s to the INEEL for temporary storage. The majority of the "suspect" RH-TRU waste is under BNFL control [22].

Reference 22 estimates the number of the "suspect" RH-TRU waste containers at 803 for a total volume of 219.5 m^3. This estimate is based both on observation and extrapolation of data events. The IDCs vary from solidified sludge to borated glass. Inside the drum there may be a shield of lead tape, a lead liner, or a lead "pig." Because the lead shielding in the drum does not allow a measurement of an unshielded contact dose rate of the unopened container, the waste is considered "suspect".

2.3 Remote Handled Waste Managed as Remote Handled Transuranic Waste

The information in this section is being provided for completeness of this EDF. Bettis Atomic Power Laboratory shipped 1,973 containers of U-233 contaminated waste for temporary storage at INEEL from 1973 through 1987 [22]. This waste was produced during the fabrication of U-233 based fuel and consists of un-irradiated fuel rods, powder, pellets, and fabrication scrap. Approximately 65 of the waste containers are stored in RCRA compliant storage modules. The remaining waste containers are under BNFL control. The waste is in either shielded or unshielded containers.

Of the BAPL RH waste managed as RH-TRU, 172 waste containers contain fuel rods, powder, and pellets (IDC 40). These containers may have lead shielding to reduce radiation exposure. The remaining waste containers are fabrication scrap and contain varying quantities of U-233. The primary source of radiation dose from these wastes is Tl-208 (a daughter product of U-232); U-232 is present as an impurity in the U-233.

3. REMOTE HANDLED TRANSURANIC WASTE INVENTORY

There are four laboratory facilities external to the INEEL that are identified as sending RH-TRU waste to the RWMC for temporary disposal, those generators are: ANL-E, ANL-W, BAPL, and NRF. Internal facilities at the INEEL that sent RH-TRU waste to RWMC for temporary disposal are TRA and INTEC. This section identifies the number of RH-TRU waste containers and the volume. Additional information such as the storage locations, contact dose rates at the time of disposition at RWMC, and additional miscellaneous information can be found in the appendices. The total volume RH-TRU waste, 129 m^3, by generator is shown in Table 1.

Table 1. The volume of remote handled transuranic waste.

Generator	Number of Containers	Total Volume (m^3)
ANL-E	630	115.3
ANL-W	32	4.8
BAPL	2	0.3
NRF	27	3.1
TRA	25	5.2
INTEC	2	0.2
Total	718	129

3.1 Argonne National Laboratory-East

The amount of RH-TRU waste sent to INEEL is six hundred and seventeen (617) 30-gal drums. Additionally, there are 13 bins that have been identified as RH-TRU either by the IDC associated with the bin [15] or by the contact radiation dose rate of the bin [14]. The total volume of ANL-E RH-TRU waste is 115.3 m^3 and is shown in Table 2. A summary of the method to determine the volume of the waste is given in this section.

Table 2. The volume of Argonne National Laboratory-East remote handled transuranic waste.

Container Type	Number of Containers	Volume/Container (m^3)	Total Volume (m^3)
30-Gal Drum	617	0.114	70.4
Bin	13	3.45	44.9
Total	630		115.3

3.1.1 30-Gal Drum Inventory

There are 617 30-gal drums of ANL-E RH-TRU waste that are either IDC 104 or IDC 107. The 30-gal drum inventory listed in Appendix A, Table A-1 is based on a review and correlation of the following pieces of information/documentation:

- RH-TRU characterization and shipping records for ANL-E [5, 6, 7, 8, 9, 10, 11, 12, 13].
- TRIPS WART[a] 97, "ILTSF Inventory" [23].
- TRIPS WART 107, "WASTE Query for ILTSF Location" [24].

[a] WART is waste analysis report tracking.

- RWMIS ILTSF Inventory [25].
- ILTSF vault logs in the RH-TRU to WIPP Project files [16].
- *AK Documentation Report for INEEL-Stored Remote Handled Transuranic Waste from Argonne National Laboratory-East* [17].
- *Waste Characterization for INEL Remote Handled / Special-Case Stored Transuranic Waste* [14].
- *Crosswalk for the Remote Handled Transuranic Waste Inventory* [26].

The characterization and shipping records contain various pieces of information such as:

- A packaging and survey form generated at the Alpha Gamma Hot Cell Facility at ANL-E, denoted as "pack sheet" in this report.
- "Radioactive Waste Form", Form ID-135.
- "Transuranic Waste Container Form", Form ID-137.
- Waste stream profile forms, denoted as WSP in this report.
- "Stored, Disposed, or Processed Solid Radioactive Waste Form", ID F 5820.2.
- "Transuranic Waste Data Base Input Form", ID F 5820.2A.
- "US DOE Off-Site Radioactive Material Shipment Record", Form DOE 5480.1A.
- "Transuranic Waste Package Data", denoted as TWPD in this report.
- Additional miscellaneous information/forms.

Appendix A, Table A-1 identifies the major forms associated with each waste container as well as the storage location, the contact dose rate at the time of disposition, the disposition date, the shipment number, the original waste container (if it was repackaged). The waste container is identified in Appendix A, Table A-1 by the waste container identification (ID) associated with the waste container from Reference 17. Crosswalk information for the waste container IDs is found in Reference 26.

Drum number 786 was previously identified in INEEL's inventory and is listed in Reference 17. This drum was placed on the inventory based on information collected at ANL-E. However, based on the fact that no reference is found in TRIPS, RWMIS, or the ILTSF vault records this drum was removed from the inventory. There is no indication it was ever shipped to INEEL. The inventory in storage as correlated between TRIPS, RWMIS, the ILTSF vault logs, the characterization and shipping records, and the acceptable knowledge document for ANL-E is 617 30-gal drums. The volume of the 30-gal drum inventory is 70.4 m^3.

3.1.2 Bin Inventory

There are 13 bins of ANL-E RH-TRU waste that are IDC 100 or IDC 104. The bin inventory listed in Appendix A, Table A-2 is based on a review and correlation of the following pieces of information/documentation:

- *Waste Characterization for INEL Remote Handled / Special-Case Stored Transuranic Waste* [14].
- *Waste Generator Questionnaire* [15].
- TRIPS WART 106, "RH IDC 100 Waste Container Bin Query" [27].
- TRIPS WART 98, "Information on Bins" [28].
- TRIPS WART 108, "WASTE Query for Bins IDC 104 [29].
- RWMIS TSA Inventory [30].
- *Crosswalk for the Remote Handled Transuranic Waste Inventory* [26].

The 13 bins that have been identified as RH-TRU are IDC 100 and IDC 104. These waste containers are listed in Appendix A, Table A-2. The bins are listed in Appendix A, Table A-2 according to the waste container ID found in TRIPS. Crosswalk information for the waste container IDs is found in Reference 26.

Reference 14 identifies seven bins by waste container ID and the shipment number associated with each bin. Also included is the contact dose rate of each bin prior to it being sent to INEEL for disposal. Based on this information, TRIPS identified each bin and indicated that the bin was in inventory [27]. However, a location for these bins was not identified (this is not uncommon for waste containers that were received during this time period). Because TRIPS verified the waste container and the contact dose rate information presented in Reference 14, these bins were added to the inventory. The bins are listed in Appendix A, Table A-2 according to the waste container ID in TRIPS. The bins are MIII bin-steel, generated prior to 1981. The volume of a bin is 3.45 m^3.

The Alpha Gamma Hot Cell Facility combustible waste, IDC 104, is discussed in Section 2.1.1 of this document. Reference 15 identifies 6 bins that were sent to the INEEL in 1982 from ANL-E. All waste generated as IDC 104 is considered RH-TRU waste. Therefore, the bins are part of the RH-TRU inventory. A TRIPS query identified 6 bins as IDC 104 that were packaged in late 1981 [28], and identified the originator as ANL-E. The WASTE database was then queried on a container-by-container basis and the shipment number was identified [29]. With the shipment information, RWMIS was then queried to identify a storage location [30]. RWMIS identified the bins based on the shipment number. These databases were queried to confirm the presence of these waste containers. The bins were sent as shipment number 22313 and were dispositioned at RWMC on 7/16/82 at TSA-RC2SN+4M. Based on the fact that all 3 databases identified the bins and that Reference 15 indicates that ANL-E sent the waste containers, these bins are added to the inventory and are identified in Appendix A, Table A-2 of this EDF. The waste container ID in TRIPS identifies each bin.

Assuming that IDC 100 and IDC 104 bins are similar waste containers, the total volume of the 13 RH-TRU ANL-E bins is 44.9 m^3.

3.2 Argonne National Laboratory-West

The ANL-W RH-TRU inventory listed in Appendix B, Table B-1 is based on a review and correlation of the following pieces of information/documentation:

- RH-TRU characterization and shipping records for ANL-W [18].
- TRIPS WART 97, "ILTSF Inventory" [23]
- TRIPS WART 107, "WASTE Query for ILTSF Location" [24].
- RWMIS ILTSF Inventory [25].
- ILTSF vault logs in the RH-TRU to WIPP Project files [16].
- *ANL-W Radioactive Inserts Stored at ILTSF* [19].
- *Waste Characterization for INEL Remote Handled / Special-Case Stored Transuranic Waste* [14].
- *Crosswalk for the Remote Handled Transuranic Waste Inventory* [26].

The inventory consists of 28 inserts and four-55-gal drums. The total volume of ANL-W waste is 4.8 m^3 and its breakdown is shown in Table 3. Information about the ANL-W RH-TRU waste is in Appendix B, Table B-1. The waste container IDs listed in Appendix B, Table B-1 are primarily from the shipment forms. Crosswalk information for the waste container IDs is found in Reference 26.

Table 3. The volume of Argonne National Laboratory-West remote handled transuranic waste.

Container Type	Number of Containers	Volume/Container (m^3)	Total Volume (m^3)
Insert	28	0.142[a]	4.0
55-Gal Drum	4	0.208	0.8
Total	32		4.8

a) Based on the data provided in Reference 14.

3.3 Bettis Atomic Power Laboratory

The BAPL RH-TRU inventory listed in Appendix C, Table C-1 is based on a review and correlation of the following pieces of information/documentation:

- RH-TRU characterization and shipping records for ANL-W [18].
- TRIPS WART 97, "ILTSF Inventory" [23]
- TRIPS WART 107, "WASTE Query for ILTSF Location" [24].
- RWMIS ILTSF Inventory [25].
- ILTSF vault logs in the RH-TRU to WIPP Project files [16].
- *ANL-W Radioactive Inserts Stored at ILTSF* [19].

- *Waste Generator Questionnaire* [15].
- *Crosswalk for the Remote Handled Transuranic Waste Inventory* [26].

The inventory of RH-TRU waste generated by BAPL consists of 2 inserts. The waste was actually shipped by ANL-W to the INEEL. The total volume of BAPL RH-TRU waste is 0.3 m^3 as shown in Table 4. Table C-1 in Appendix C contains additional information about the RH-TRU BAPL waste (ANL-88107 and ANL-88164). The waste container IDs listed in Appendix C, Table C-1 are taken from the shipment forms. Crosswalk information for the waste container IDs is found in Reference 26.

Table 4. The volume of Bettis Atomic Power Laboratory remote handled transuranic waste.

Container Type	Number of Containers	Volume/Container (m^3)	Total Volume (m^3)
Insert	2	0.142[a]	0.3

a) Based on the data provided in Reference 14.

3.4 Naval Reactors Facility

The NRF RH-TRU inventory listed in Appendix D, Table D-1 is based on a review and correlation of the following pieces of information/documentation:

- RH-TRU characterization and shipping records for NRF [18].
- TRIPS WART 97, "ILTSF Inventory" [23]
- TRIPS WART 107, "WASTE Query for ILTSF Location" [24].
- RWMIS ILTSF Inventory [25].
- ILTSF vault logs in the RH-TRU to WIPP Project files [16].
- *Waste Characterization for INEL Remote Handled / Special-Case Stored Transuranic Waste* [14].
- *Crosswalk for the Remote Handled Transuranic Waste Inventory* [26].

The twenty-seven 30-gal drums identified as NRF RH-TRU waste are listed in Appendix D, Table D-1. The waste container IDs listed in Appendix D, Table D-1 are primarily from the shipment forms. Crosswalk information for the waste container IDs is found in Reference 26. The volume of NRF RH-TRU waste is 3.1 m^3 as shown in Table 5.

Table 5. The volume of Naval Reactor Facility remote handled transuranic waste.

Container Type	Number of Containers	Volume/Container (m^3)	Total Volume (m^3)
30-Gal Drum	27	0.114	3.1

3.5 Test Reactor Area

The TRA RH-TRU inventory listed in Appendix E, Table E-1 is based on a review and correlation of the following pieces of information/documentation:

- RH-TRU characterization and shipping records for TRA [18].
- TRIPS WART 97, "ILTSF Inventory" [23]
- TRIPS WART 107, "WASTE Query for ILTSF Location" [24].
- RWMIS ILTSF Inventory [25].
- ILTSF vault logs in the RH-TRU to WIPP Project files [16].
- Interoffice correspondence from D. R. Wilkenson [20].
- Interoffice correspondence from D. R. Wilkenson [21].
- *Crosswalk for the Remote Handled Transuranic Waste Inventory* [26].

The twenty-five 55-gal drums identified as TRA RH-TRU waste is documented in Appendix E, Table E-1. The waste container IDs listed in Appendix E, Table E-1 are primarily from the characterization and shipping records. Crosswalk information for the waste container IDs is found in Reference 26. The volume of TRA RH-TRU waste is 5.2 m^3 as shown in Table 6.

Table 6. The volume of Test Reactor Area remote handled transuranic waste.

Container Type	Number of Containers	Volume/Container (m^3)	Total Volume (m^3)
55-Gal Drum	25	0.208	5.2

3.6 Idaho Nuclear Technology and Engineering Center

The INTEC RH-TRU inventory listed in Appendix F, Table F-1 is based on a review and correlation of the following pieces of information/documentation:

- RH-TRU characterization and shipping records for INTEC [18].
- TRIPS WART 97, "ILTSF Inventory" [23]
- TRIPS WART 107, "WASTE Query for ILTSF Location" [24].
- RWMIS ILTSF Inventory [25].
- ILTSF vault logs in the RH-TRU to WIPP Project files [16].

- *Waste Characterization for INEL Remote Handled / Special-Case Stored Transuranic Waste* [14].

- *Crosswalk for the Remote Handled Transuranic Waste Inventory* [26].

The two-30-gal drums of INTEC RH-TRU waste is documented in Appendix F, Table F-1. The volume of INTEC RH-TRU waste is 0.2 m^3 as shown in Table 7. The waste container IDs listed in Appendix F, Table F-1 are taken from the ILTSF vault logs. Crosswalk information for the waste container IDs is found in Reference 26.

Table 7. The volume of Idaho Nuclear Technology and Engineering Center remote handled transuranic waste.

Container Type	Number of Containers	Volume/Container (m^3)	Total Volume (m^3)
30-Gal Drum	2	0.114	0.2

4. "SUSPECT" REMOTE HANDLED TRANSURANIC WASTE INVENTORY

Rocky Flats Environmental Technology Site is assumed to be the only generator of "suspect" RH-TRU waste. The volume of the RFETS "suspect" RH-TRU waste is 303 m^3, this estimate is based on observation for the fall of 1971 – 1990 [14, 31] and extrapolation for 1970 – 1971 (October 31). This value is based on a review of the following references:

- TRIPS WART 101, "Lead-lined Waste + rerun AK RTR" [31].

- TRIPS WART 109, "Rerun of AK RTR Data for RH suspect inv" [32].

- *Waste Characterization for INEL Remote Handled / Special-Case Stored Transuranic Waste* [14].

- *Baseline Estimate of the Amount of Suspect Remote Handled Transuranic Waste (RH-TRU)Stored at the Radioactive Waste Management Complex (RWMC)* [22].

- TRIPS WART 110, "IDC counts based on pack dates for RH inv" [33].

- *Inventory Analysis of Stored Transuranic (TRU) Waste at the Radioactive Waste Management Complex (RWMC)* [34].

- *Initial Drum Retrieval Final Report* [35].

- *Early Waste Retrieval Final Report* [36].

4.1 Database History

The Transuranic Contaminated Waste Container Information System (TCWCIS) was used from 1971 until 1984. The Transuranic Waste Information System (TWMIS) replaced TCWCIS in 1984.

TRIPS replaced TWMIS in 1998. Data that were not approved and verified through Reference 37 were not migrated to TRIPS. Multiple waste container entries for a single event were also not migrated to TRIPS. Additional information migrated to the WASTE database were pieces of information and tables from TWMIS and the Data Management System (DMS). The DMS database was the database that was in use at Stored Waste Experimental Pilot Plant prior to the implementation of TRIPS, therefore real-time radiography data events were entered in this database. Since DMS is no longer an accessible database, WASTE, which contains various DMS tables was queried for "suspect" containers.

The TCWCIS had a shield code of "-1" when lead was identified in a waste container. The databases that followed did not have the shield code, "-1". When real-time radiography was performed and lead was observed in a drum during the 3100 m^3 Project, a lead field was marked in TRIPS. The lead designation in TRIPS was used to identify drums that contained lead. WASTE was also queried to identify lead containing drums. Based on the IDC, a determination was made as to whether lead was used as shielding in the drum. The data results were compared to those found in Reference 14, which contained a listing from TCWCIS.

4.2 Data

Reference 14 identified 453 records that contained lead referenced by the shield code in TCWCIS. Also included in this count were 6 fiber reinforced plywood (FRP) boxes, which shall be retained here for simplicity. These waste containers were identified from direct observation and were in inventory from 1971 through 1984. The databases, TRIPS and WASTE, identified several additional waste containers with lead. TRIPS identified 1,326 containers with lead while WASTE identified 561 containers with lead. Table 8 summarizes the unique waste container count that was identified in the database queries. In an effort to be conservative, any event that indicated lead being present in a container was enough to have the container included in Table 8.

Table 8. Rocky Flats Environmental Technology Site lead containing drums identified by database queries.

Database	Lead Containing Records	Explanation	Reference
TRIPS	1,326	Records identified in TRIPS as containing lead and real-time radiography after 1/1/98.	Reference 32
WASTE	129	129 of the 561 records identified in Reference 31 were not identified in Reference 32.	Reference 31
WASTE	80	80 of the 561 waste containers identified Reference 31 with lead are identified in Reference 32 without lead.	Reference 31
	1,535	Total number of containers with suspected lead content.	

Waste containers were eliminated based on the following criteria:

- Waste containers found in Reference 14.
- Leaded apron.
- Leaded tape that was not used as shielding.

- Leaded glass.
- Leaded gloves.
- Lead scrap material.
- Additional waste containers were evaluated based on a case-by-case basis.
- Three waste containers with package dates of 1950.
- Waste containers that are no longer in the inventory.

The number of "suspect" drums that remained from the initial 1,535 was 450 unique containers [32]. When the 453 "suspect" waste containers identified in the Reference 14 are added to the 450 drums identified by TRIPS and WASTE, the total the number of "suspect" waste containers is 903. The "suspect" waste containers were identified from direct observation and were packaged from November 1, 1971 through January 1, 1990. The total number of RFETS drums with pack dates from November 1, 1971 through January 1, 1990 is 82,533 waste containers [33]. The pack date was used instead of the disposition date because a smaller fraction of drums were missing their pack dates. In the event a pack date was not available a disposition date was used. The total percentage of lead shielded RFETS waste containers is 1.1% for November 1, 1971 through January 1, 1990.

The observations of drums in inventory from the fall of 1971 through 1989 were used to estimate the drums received from 1970 through the fall of 1971. Drums stored during 1970 – 1971 were often characterized as unknown and/or placed under earthen cover for temporary disposal. These drums are not identified in any database. The best estimate of the number of containers during this time period is 42,404 [34, 35, 36].

Assuming all waste generation and packaging processes are the same for both 1970 to fall of 1971 and the fall of 1971 through 1990, the same fraction of waste containers will contain lead. Based on the best estimate, there are 42,404 waste containers that are not entered in a waste database. Given that 1.1% of the RFETS containers were found in the RFETS population of drums from 1971 through 1990, the extrapolation of 1.1% yields 466 (0.011 * 42,404 = 466) additional lead-lined containers for the period of 1970 to the fall of 1971. As such, there should be a total of 903 + 466 = 1,369 lead-lined containers for the period 1970 through 1990. Table 9 identifies the total number of "suspect" RH-TRU containers as 1,369; the volume is 303 m^3. The waste containers identified as "suspect" RH-TRU are identified in Appendix G, Table G-1 along with their respective IDC. The waste containers are identified in Appendix G, Table G-1 by the waste container ID in TRIPS.

Reference 22 estimates the total number of "suspect" waste containers as 803 while this document estimates 1,369 waste containers as being lead-shielded waste containers. The increase in the number of lead-shielded containers is attributed to the fact that Reference 22 did not include the containers identified in TRIPS as containing lead. An additional 450 containers were identified in TRIPS and WASTE as containing lead as observed by direct observation. In addition, the fraction of containers directly observed as containing lead is used to extrapolate the number of containers with lead for 1970 – 1971 (October 31) based on the total number of containers in those years, which is different from the number of containers with lead found in Reference 22. Also by using the containers identified by TRIPS as containing lead, the need to extrapolate containers with pack dates from 1984 – 1990 is eliminated. Thus, a total of 566 additional waste containers are estimated to be lead-shielded waste containers, giving a total of 1,369 "suspect" waste containers.

Table 9. The volume of Rocky Flats Environmental Technology Site "suspect" remote handled transuranic waste.

Time period	Container Type	Number of Containers	Volume per Container (m3)	Total Volume (m3)	Comments
1970 – 1971	55-Gal Drum	466	0.208	96.9	Based on extrapolation from 1971 – 1990.
1971 – 1984	55-Gal Drum FRP Bin	447 6	0.208 3.2	93.0 19.2	Based on Reference 14.
1971 – 1990	55-Gal Drum	450	0.208	93.6	Based on Reference 32.
TOTAL		1,369		303	

5. REMOTE HANDLED WASTE MANAGED AS REMOTE HANDLED TRANSURANIC WASTE

The volume of the RH waste managed as RH-TRU waste is 52 m^3. This inventory was generated by BAPL. For planning purposes the number of containers managed as RH-TRU was assumed to be 250 containers (52 m^3). Documentation indicates 104 m^3 total volume. However, approximately 52 m^3 of the total is fuel and fuel rods that will not be disposed of at WIPP. This information is included for completeness of this EDF. The following references were reviewed for this waste estimate:

- Interoffice correspondence from J.W. Sterbentz and R.L. Sant [38].
- E-mail correspondence between R.N. Bhatt and D.P. Zeek [39].
- TRIPS WART 111, "Bettis Gen BL Queries for RH Inv" [40].
- *Advanced Mixed Waste Final Environmental Impact Statement* [41].

The BAPL RH waste managed as RH-TRU waste and is contaminated with U-233. A detailed study of the U-233 waste inventory yielded an estimated 436 containers that may reach or exceed a surface dose rate of 200 mR/hr after the year 2002. The analysis was performed using ORIGEN-2 and MicroShield[b]. There were two impurity levels of U-232 in the U-233 waste based on information available from BAPL, as well as in certain fuel rods stored at RWMC [38, 39]. The results of the analysis indicated that the number of U-233 waste containers that have the potential to reach or exceed a surface dose of 200 mrem/hr in the next few years (2002-2005) varies from 224 to 647. If an average of the lower and upper range numbers is assumed, the U-233-contaminated waste stream will yield some 436 containers. Out of these, 172 containers are assumed to have lead shielding and can be handled as contact handled waste [22].

[b] MicroShield is a product of Grove Engineering.

Table 10. Bettis Atomic Power Laboratory U-233 contaminated waste.

IDC	Description	Number of Containers	Number of Inserts	Number of Other	Volume (m^3)
10	Rags, gloves, polyethylene, combustible	940			195.5
12	Miscellaneous sources	1			0.20
15	Neutron sources	4			0.80
20	Noncompressible, noncombustible	794			165.2
30	Solidified grinding sludge and related	45	2 [a]		16.3
40	Solidified binary scrap powder and related	95		77	49
50	Solidified solutions	1			0.20
81	Metal-metal samples fissile	17			3.30
TOTALS		1,897	2	77	430.5

a) Included within the RH-TRU inventory.

Reference 41 identifies the BAPL waste as having 1,896 containers while Table 11 identifies 1,897 containers. The discrepancy comes from an additional drum of IDC 15. This waste container, IDBLM1049, was identified in a query of TRIPS [40]. The waste container IDC and waste generator were unknown until 2001 when real-time radiography was performed on the 55-gal drum. Based on the real-time radiography, the IDC 15 and the waste generator were assigned to the drum. Assuming the same configuration and volume, an additional 0.2 m^3 was assigned to this waste stream. The BAPL waste inventory is identified along with the associated IDC in Appendix C, Table C-2. The waste container ID in TRIPS identifies the containers listed in Appendix C, Table C-2.

6. CONCLUSION

There are three waste types presented in this EDF, RH-TRU, “suspect” RH-TRU waste, and RH waste managed as RH-TRU waste. The volume of the waste types is shown in Table 11 as well as the number of containers. Containers except for the project containers are identified in Table 11 and additional container information is listed in the appendices of this EDF except for the lead-shielded containers projected for the "suspect" RH TRU inventory. The determination of waste characteristics was based on queries of multiple databases, reviews of the characterization and shipping reports, the ILTSF vault storage log sheets, and several other documents on waste disposition.

Table 11. Baseline inventory volume of waste.

Waste Type	Number of Containers	Volume (m^3)
RH-TRU	718	129
“Suspect” RH-TRU	1,369	303
RH managed as RH-TRU	250	52
TOTAL	2,523	484

7. REFERENCES

1 Title 40 CFR Part 191, "Environmental Radiation Protection Standards For Management," Code of Federal Regulations, Washington, D.C., Office of the Federal Register, National Archives and Records Administration.

2 Title 10 CFR Part 61, "Licensing Requirements For Land Disposal Of Radioactive Waste," Code of Federal Regulations, Washington, D.C., Office of the Federal Register, National Archives and Records Administration.

3 Idaho Settlement Agreement, State of Idaho, U.S. Department of Energy, U.S. Navy, October 16, 1995.

4 Guay, K.P., "Inventory Analysis of Stored Transuranic (TRU) Waste at the Radioactive Waste Management Complex (RWMC)", WM-PD-90-003, April 30, 1990, Idaho National Engineering and Environmental Laboratory.

5 RH-TRU Characterization & Shipping Records, 3460-94-084, Volume II, ANL-E # 109-399, RH-TRU to WIPP project office.

6 RH-TRU Characterization & Shipping Records, 3460-94-084, Volume III, ANL-E # 400-499, RH-TRU to WIPP project office.

7 RH-TRU Characterization & Shipping Records, 3460-94-084, Volume IV, ANL-E # 500-599, RH-TRU to WIPP project office.

8 RH-TRU Characterization & Shipping Records, 3460-94-084, Volume V, ANL-E # 600-619, RH-TRU to WIPP project office.

9 RH-TRU Characterization & Shipping Records, 3460-94-084, Volume VI, ANL-E # 620-639, RH-TRU to WIPP project office.

10 RH-TRU Characterization & Shipping Records, 3460-94-084, Volume VII, ANL-E # 640-699, RH-TRU to WIPP project office.

11 RH-TRU Characterization & Shipping Records, 3460-94-084, Volume VIII, ANL-E # 670-699, RH-TRU to WIPP project office.

12 RH-TRU Characterization & Shipping Records, 3460-94-084, Volume IX, ANL-E # 700-1099, RH-TRU to WIPP project office.

13 RH-TRU Characterization & Shipping Records, 3460-94-084, Volume X, ANL-E # 1100-1200, RH-TRU to WIPP project office.

14 Peterson, D.A., "Waste Characterization for INEEL Remote Handled/Special Case Stored Transuranic Waste", WM-PD-85-014, November 1985, Idaho National Engineering and Environmental Laboratory.

15 Falconer, R.D., "Waste Generator Questionnaire", EDF-RWMC- 676, July 11, 1994, Idaho National Engineering and Environmental Laboratory.

16 ILTSF vault logs in the RH-TRU to WIPP project files.

17 "AK Documentation Report for INEEL-Stored Remote Handled Transuranic Waste from Argonne National laboratory-East", ITC-DOC-828599-02, Draft Final, July 15, 2003, IT Corporation.

18 RH-TRU Characterization & Shipping Records, 3460-94-084, Volume XI, ANL-W, NRF, ICPP, & TRA, RH-TRU to WIPP project office.

19 Kuan, P., "ANL-W Radioactive Inserts Stored at ILTSF", EDF-4208, November 13, 2003, Idaho National Engineering and Environmental Laboratory.

20 Interoffice correspondence from D.R. Wilkenson to R.D. Johnson, Transuranic Waste Profile Statement Approval – DRW-01-90, January 4, 1990.

21 Interoffice correspondence from D.R. Wilkenson to P.A. Erickson, A Non-standard Characterization Report Review and Approval for Test Reactors Area/Advanced Test Reactor (TRA/ATR) Am-241 Contaminated Resin, Remote Handled Transuranic (TRU) – DRW-53-94, August 1, 1994.

22 Planksy, L.E., "Baseline Estimate of the Amount of Suspect Remote Handled Transuranic Waste (RH-TRU) Stored at the Radioactive Waste Management Complex (RWMC)", July 4, 2001, Idaho National Engineering and Environmental Laboratory.

23 TRIPS WART 97, "Inventory of ILTSF", Implemented January 7, 2004.

24 TRIPS WART 107, "Waste Query for ILTSF Location", Implemented January 27, 2004.

25 RWMIS ILTSF Inventory, Query of RWMIS database as of June 1997, performed October 10, 2003 to identify the containers in ILTSF.

26 EDF-4699, "A Container Identification Crosswalk for the RH-TRU Inventory", DRAFT.

27 TRIPS WART 106, "RH IDC 100 Waste Container Bin Query", Implemented January 27, 2004.

28 TRIPS WART 98, "Information on Bins", Implemented January 7, 2004.

29 TRIPS WART 108, "WASTE Query for Bins IDC 104", Implemented January 27, 2004.

30 RWMIS TSA Inventory, Query of the RWMIS database as of June 1997 for containers stored in TSA, performed October 9, 2003.

31 TRIPS WART 101, "Lead-lined Waste + rerun AK RTR", Implemented January 8, 2004.

32 TRIPS WART 109, "Rerun of AK RTR Data for RH suspect inv", Implemented January 27, 2004.

33 TRIPS WART 110, "IDC counts based on pack dates for RH inv" Implemented January 27, 2004.

34 Barnard, C.J., "Inventory Analysis of Stored Transuranic (TRU) Waste at the Radioactive Waste Management Complex (RWMC)", WM-PD-90-003, Rev. 1, August 16, 1993, Idaho National Engineering and Environmental Laboratory.

35 McKinley, K. B., et al., "Initial Drum Retrieval Final Report", TREE-1286, August 1978, Idaho National Engineering and Environmental Laboratory.

36 Bishoff, J. R., et al., "Early Waste Retrieval Final Report", TREE-1321, August 1979, Idaho National Engineering and Environmental Laboratory.

37 TWMIS-TRIPS Migration Plan, 1.3, March 3, 1998.

38 Letter correspondence from J.W. Sterbentz and R.L. Sant, to R.N. Bhatt, Calculated Dose Rates For Drums Containing Unirradiated LWBR Uranium Oxide, JWS-01-01, March 14, 2001.

39 E-mail correspondence between R.N. Bhatt and D.P. Zeek, March 14, 2001.

40 TRIPS WART 111, "Bettis Gen BL Queries for RH Inv", Implemented January 27, 2004.

41 U.S. Department of Energy, "Advanced Mixed Waste Final Environmental Impact Statement", DOE-EIS-0290, January 1999, Idaho Operations Office.

Appendix A

Argonne National Laboratory-East

This page is intentionally left blank.

Appendix A

Argonne National Laboratory-East

Table A-1. Argonne National Laboratory-East remote handled transuranic waste in 30-gal drums.

Drum	Pack Sheet	Form 135	Form 137	Form 5480.1A	Form 5820.2A	Form 5820.2	TWPD	Other	Original Drum	Disposition Date	Shipment	2nd Shipment	Storage Location[a]	Contact Dose Rate[b] (mrem/hr)	Comments
109	Y	N	N	N	Y	Y	Y	N	1109	08/24/87	TRU874		E45-4	19000	Repackaged 7/29/87.
301	Y	N	N	N	N	N	N	N		10/02/78	TRAN-U-788		C11-1	1000	
302	Y	Y	Y	N	N	N	Y	N		10/24/78	TRAN-U-7810		B12-1	14000	
303	Y	Y	Y	N	N	N	N	N		10/16/78	TRAN-U-789		B9-2	3000	
304	Y	Y	Y	N	N	N	N	N		10/24/78	TRAN-U-7810		B12-2	1800	Dented.
305	Y	Y	Y	N	N	N	N	N		10/24/78	TRAN-U-7810		B12-4	12000	
306	Y	Y	Y	N	N	N	N	N		10/24/78	TRAN-U-7810		B12-3	3000	
307	Y	Y	Y	N	N	N	N	N		10/16/78	TRAN-U-789		B9-5	8000	
308	Y	Y	Y	N	N	N	N	N		10/16/78	TRAN-U-789		B9-4	6000	
309	Y	Y	Y	N	N	N	N	N		10/24/78	TRAN-U-7810		B12-5	900	
310	Y	Y	Y	N	N	N	N	N		10/24/78	TRAN-U-7810		B11-1	8000	
311	Y	Y	Y	N	N	N	N	N		10/24/78	TRAN-U-7810		B11-4	800	
312	Y	Y	Y	N	N	N	N	N		10/24/78	TRAN-U-7810		B11-5	1000	
313	Y	Y	Y	N	N	N	N	N		10/24/78	TRAN-U-7810		B11-2	1250	
314	Y	Y	Y	N	N	N	N	N		10/24/78	TRAN-U-7810		B11-3	2000	
315	Y	Y	Y	N	N	N	N	N		10/16/78	TRAN-U-789		B9-1	2250	
316	Y	Y	Y	N	N	N	N	N		10/16/78	TRAN-U-789		C9-5	6000	
317	N	Y	Y	N	N	N	N	N		10/16/78	TRAN-U-789		C9-3	8000	
318	Y	Y	Y	N	N	N	N	N		10/16/78	TRAN-U-789		C9-2	5000	
319	Y	Y	Y	N	N	N	N	N		10/16/78	TRAN-U-789		C9-4	4000	
320	Y	Y	Y	N	N	N	N	N		10/16/78	TRAN-U-789		C9-1	10000	

Table A-1. (continued).

Drum	Pack Sheet	Form 135	Form 137	Form 5480.1A	Form 5820.2A	Form 5820.2	TWPD	Other	Original Drum	Disposition Date	Shipment	2nd Shipment	Storage Location[a]	Contact Dose Rate[b] (mrem/hr)	Comments
321	Y	Y	Y	N	N	N	N	N		07/31/81	TRAN-U-811		A15-8	5000	
322	Y	Y	Y	N	N	N	N	N		07/31/81	TRAN-U-811		A15-6	3500	
323	Y	Y	Y	N	N	N	N	N		07/31/81	TRAN-U-811		A16-1	10000	
324	Y	Y	Y	N	N	N	N	N		07/31/81	TRAN-U-811		A15-7	1000	
325	Y	Y	Y	N	N	N	N	N		07/31/81	TRAN-U-811		A15-9	5500	
326	Y	Y	N	N	N	N	N	N		07/31/81	TRAN-U-811		A15-11	1250	
327	Y	Y	N	N	N	N	N	N		07/31/81	TRAN-U-811		A15-10	2000	
328	Y	Y	N	N	N	N	N	N		08/17/81	TRAN-U-813		A19-7	700	
329	Y	Y	N	N	N	N	N	N		08/07/81	TRAN-U-812		A17-1	14000	
330	Y	Y	N	N	N	N	N	N		08/07/81	TRAN-U-812		A17-2	700	
331	Y	Y	N	N	N	N	N	N		08/07/81	TRAN-U-812		A17-3	325	
332	Y	Y	N	N	N	N	N	N		08/07/81	TRAN-U-812		A17-5	1000	
333	Y	Y	N	N	N	N	N	N		07/31/81	TRAN-U-811		A15-4	5000	
334	Y	Y	N	N	N	N	N	N		08/07/81	TRAN-U-812		A17-10	1000	
335	Y	Y	N	N	N	N	N	N		08/07/81	TRAN-U-812		A17-9	8000	
336	Y	Y	N	N	N	N	N	N		08/07/81	TRAN-U-812		A17-7	350	
337	Y	Y	N	N	N	N	N	N		08/07/81	TRAN-U-812		A17-6	1000	
338	Y	Y	N	N	N	N	N	N		07/31/81	TRAN-U-811		A15-5	3500	
339	Y	Y	N	N	N	N	N	N		08/07/81	TRAN-U-812		A17-8	900	
340	Y	Y	N	N	N	N	N	N		08/07/81	TRAN-U-812		A17-4	800	
341	Y	Y	N	N	N	N	N	N		08/17/81	TRAN-U-813		A19-10	10000	
342	Y	Y	N	N	N	N	N	N		07/31/81	TRAN-U-811		A15-3	14000	
343	Y	Y	N	N	N	N	N	N		08/17/81	TRAN-U-813		A19-8	2000	
344	Y	Y	N	N	N	N	N	N		08/17/81	TRAN-U-813		A19-9	3500	

Table A-1. (continued).

Drum	Pack Sheet	Form 135	Form 137	Form 5480.1A	Form 5820.2A	Form 5820.2	TWPD	Other	Original Drum	Disposition Date	Shipment	2nd Shipment	Storage Location[a]	Contact Dose Rate[b] (mrem/hr)	Comments
345	Y	Y	N	N	N	N	N	N		08/17/81	TRAN-U-813		A19-6	1500	
346	Y	Y	N	N	N	N	N	N		08/17/81	TRAN-U-813		A19-5	3500	
347	Y	Y	Y	N	N	N	N	N		08/25/81	TRAN-U-814		A16-6	500	
348	Y	Y	Y	N	N	N	N	N		08/25/81	TRAN-U-814		A16-5	300	
349	Y	Y	Y	N	N	N	N	N		08/25/81	TRAN-U-814		A16-2	200	
350	Y	Y	Y	N	N	N	N	N		08/25/82	TRAN-U-8210	22245	C18-1	500	
351	Y	Y	Y	N	N	N	N	N		07/26/82	TRAN-U-822		B18-9	200	
352	Y	Y	N	N	N	N	N	N		08/17/81	TRAN-U-813		A19-4	600	
353	Y	Y	Y	N	N	N	N	N		07/26/82	TRAN-U-822		B18-7	400	
354	Y	Y	N	N	N	N	N	N		08/17/81	TRAN-U-813		A19-1	1300	
355	Y	Y	N	N	N	N	N	N		08/17/81	TRAN-U-813		A19-3	1300	
356	Y	Y	Y	N	N	N	N	N		08/25/81	TRAN-U-814		A16-3	15000	
357	Y	Y	Y	N	N	N	N	N		09/04/81	TRAN-U-815		B15-9	2000	
358	Y	Y	Y	N	N	N	N	N		09/25/81	TRAN-U-819		B17-1	1750	
359	Y	Y	Y	N	N	N	N	N		09/25/81	TRAN-U-819		B17-2	1750	
360	Y	Y	Y	N	N	N	N	N		09/04/81	TRAN-U-815		B15-10	1250	
361	Y	Y	Y	N	N	N	N	N		07/26/82	TRAN-U-822		B18-8	2000	
362	Y	Y	Y	N	N	N	N	N		07/26/82	TRAN-U-822		B18-10	2500	
363	Y	Y	Y	N	N	N	N	N		09/04/81	TRAN-U-815		B15-7	10000	
364	Y	Y	Y	N	N	N	N	N		09/04/81	TRAN-U-815		B15-8	450	
365	Y	Y	Y	N	N	N	N	N		09/25/81	TRAN-U-819		B17-5	3000	
367	Y	Y	Y	N	N	N	N	N		09/04/81	TRAN-U-815		B15-6	2800	
368	Y	Y	Y	N	N	N	N	N		09/04/81	TRAN-U-815		B15-2	2500	
369	Y	Y	Y	N	N	N	N	N		09/04/81	TRAN-U-815		B15-1	1300	

Table A-1. (continued).

Drum	Pack Sheet	Form 135	Form 137	Form 5480.1A	Form 5820.2A	Form 5820.2	TWPD	Other	Original Drum	Disposition Date	Shipment	2nd Shipment	Storage Location[a]	Contact Dose Rate[b] (mrem/hr)	Comments
370	Y	Y	Y	N	N	N	N	N		09/04/81	TRAN-U-815		B15-3	700	
371	Y	Y	Y	N	N	N	N	N		09/04/81	TRAN-U-815		B15-5	1500	
373	Y	Y	Y	N	N	N	N	N		09/04/81	TRAN-U-815		B15-4	1700	
374	Y	Y	Y	N	N	N	N	N		08/25/81	TRAN-U-814		A16-11	15000	
376	Y	Y	Y	N	N	N	N	N		08/02/82	TRAN-U-829	22306	B19-4	13000	
377	Y	Y	Y	N	N	N	N	N		08/25/81	TRAN-U-814		A16-10	11000	
378	Y	Y	Y	N	N	N	N	N		07/26/82	TRAN-U-822		B18-4	1500	
379	Y	Y	Y	N	N	N	N	N		08/02/82	TRAN-U-829	22306	B19-2	4000	
386	Y	Y	Y	N	N	N	N	N		07/26/82	TRAN-U-822		B18-2	7000	
387	Y	Y	Y	N	N	N	N	N		07/26/82	TRAN-U-822		B18-1	350	
390	Y	Y	Y	N	N	N	N	N		09/02/82	TRAN-U-8213		C19-9	500	
391	Y	Y	Y	N	N	N	N	N		08/02/82	TRAN-U-829	22306	B19-3	1000	
393	N	Y	Y	N	N	N	N	N		06/28/82	TRAN-U-821		A18-4	600	
394	N	Y	Y	N	N	N	N	N		06/28/82	TRAN-U-821		A18-5	3500	
395	N	Y	N	N	N	N	N	N		08/17/81	TRAN-U-813		A19-2	NL	
396	N	N	N	N	N	N	N	N		08/15/83	TRAN-U-836A		F22-1	NL	Disposition & storage based on vault log.
397	N	N	N	N	N	N	N	N		08/15/83	TRAN-U-836A		F23-1	NL	Disposition & storage based on vault log.
398	N	Y	Y	N	N	N	N	N		08/25/81	TRAN-U-814		A16-4	3000	
399	N	Y	Y	N	N	N	N	N		06/28/82	TRAN-U-821		A18-7	3500	
400	N	Y	Y	N	N	N	N	N		06/28/82	TRAN-U-821		A18-6	2300	
401	Y	N	N	N	N	N	N	N		11/11/76	TRAN-U-768		F1-3	3000	Disposition date& shipment based on vault log. Transferred to F1&2 8-27-87
402	Y	N	N	N	N	N	N	N		11/11/76	TRAN-U-768		F3-1	5500	Disposition date & shipment based on vault log. Transferred

Table A-1. (continued).

Drum	Pack Sheet	Form 135	Form 137	Form 5480.1A	Form 5820.2A	Form 5820.2	TWPD	Other	Original Drum	Disposition Date	Shipment	2nd Shipment	Storage Location[a]	Contact Dose Rate[b] (mrem/hr)	Comments
															to F3 & $ 8-27-87
403	Y	N	N	N	N	N	N	N		11/11/76	TRAN-U-768		F3-2	1000	Disposition date & shipment based on vault log. Transferred to F3 & $ 8-27-87
404	Y	N	N	N	N	N	N	N		11/11/76	TRAN-U-768		F1-5	7000	Disposition date & shipment based on vault log. Transferred to F1&2 8-27-87
405	Y	N	N	N	N	N	N	N		11/11/76	TRAN-U-768		F3-4	3000	Disposition date & shipment based on vault log. Transferred to F3 & $ 8-27-87
406	Y	N	N	N	N	N	N	N		11/11/76	TRAN-U-768		F1-4	3000	Disposition date & shipment based on vault log. Transferred to F1&2 8-27-87
407	Y	N	N	N	N	N	N	N		11/11/76	TRAN-U-768		F1-2	3000	Disposition date & shipment based on vault log. Transferred to F1&2 8-27-87
408	Y	N	N	N	N	N	N	N		11/11/76	TRAN-U-768		F3-5	3000	Disposition date & shipment based on vault log. Transferred to F3 & $ 8-27-87
409	Y	N	N	N	N	N	N	N		11/11/76	TRAN-U-768		F3-3	2500	Disposition date & shipment based on vault log. Transferred to F3 & $ 8-27-87
410	Y	N	N	N	N	N	N	N		11/11/76	TRAN-U-768		F1-1	5000	Disposition date & Shipment based on vault log. Transferred to F1&2 8-27-87
411	Y	Y	N	N	N	N	N	N		11/18/76	TRAN-U-768		F2-3	4000	Transferred to A4 10-6-81
412	Y	Y	N	N	N	N	N	N		11/18/76	TRAN-U-768		F4-2	5000	
413	Y	Y	N	N	N	N	N	N		11/18/76	TRAN-U-768		F5-2	1500	Transferred to A4 10-6-81
414	Y	Y	N	N	N	N	N	N		11/18/76	TRAN-U-768		F2-1	3000	Transferred to F1&2 8-27-87
415	Y	Y	N	N	N	N	N	N		11/18/76	TRAN-U-768		F4-1	9000	Transferred to F3 & $ 8-27-87
416	Y	Y	N	N	N	N	N	N		11/18/76	TRAN-U-768		F2-5	12000	Transferred to A4 10-6-81
417	Y	Y	N	N	N	N	N	N		11/18/76	TRAN-U-768		F2-2	9000	

Table A-1. (continued).

Drum	Pack Sheet	Form 135	Form 137	Form 5480.1A	Form 5820.2A	Form 5820.2	TWPD	Other	Original Drum	Disposition Date	Shipment	2nd Shipment	Storage Location[a]	Contact Dose Rate[b] (mrem/hr)	Comments
418	Y	Y	N	N	N	N	N	N		11/18/76	TRAN-U-768		F2-4	2000	Transferred to A4 10-6-81
419	Y	Y	N	N	N	N	N	N		11/18/76	TRAN-U-768		F5-1	3000	Transferred to A4 10-6-81
420	Y	Y	N	N	N	N	N	N		11/18/76	TRAN-U-768		F4-3	2000	Transferred to F2 & 5 8-27-87
421	Y	Y	N	N	N	N	N	N		12/03/76	TRAN-U-768		A6-54	4250	Transferred to F4 & 6 8-27-87
422	Y	Y	N	N	N	N	N	N		12/03/76	TRAN-U-768		F6-1	4500	Transferred to F2 & 5 8-27-87
423	Y	Y	N	N	N	N	N	N		12/03/76	TRAN-U-768		F6-2	2500	Transferred to F2 & 5 8-27-87
424	Y	Y	N	N	N	N	N	N		12/03/76	TRAN-U-768		A5-3	10000	Transferred to F4 & 6 8-27-87
425	Y	Y	N	N	N	N	N	N		12/03/76	TRAN-U-768		A5-2	3500	Transferred to F4 & 6 8-27-87
426	Y	Y	N	N	N	N	N	N		12/03/76	TRAN-U-768		F4-5	6000	Transferred to F2 & 5 8-27-87
427	Y	Y	N	N	N	N	N	N		12/03/76	TRAN-U-768		A17-11	2500	Transferred to F4 & 6 8-27-87
428	Y	Y	N	N	N	N	N	N		12/03/76	TRAN-U-768		F5-4	4500	
429	Y	Y	N	N	N	N	N	N		12/03/76	TRAN-U-768		F5-3	12000	Transferred to A4 10-6-81
430	Y	Y	N	N	N	N	N	N		12/03/76	TRAN-U-768		F4-4	2000	Transferred to F2 & 5 8-27-87
431	Y	Y	N	N	N	N	N	N		12/13/76	TRAN-U-768		A6-1	3000	Transferred to A7 9-27-81
432	Y	Y	N	N	N	N	N	N		12/13/76	TRAN-U-768		A5-7	10000	Transferred to F4 & 6 8-27-87
433	Y	Y	N	N	N	N	N	N		12/13/76	TRAN-U-768		A7-1	11000	Transferred to A8 9-27-81
434	Y	Y	N	N	N	N	N	N		12/13/76	TRAN-U-768		F6-4	2000	Transferred to F2 & 5 8-27-87
435	Y	Y	N	N	N	N	N	N		12/13/76	TRAN-U-768		A7-2	3000	Transferred to A8 9-27-81
436	Y	Y	N	N	N	N	N	N		12/13/76	TRAN-U-768		A5-6	12000	Transferred to F4 & 6 8-27-87
437	Y	Y	N	N	N	N	N	N		12/13/76	TRAN-U-768		A5-5	8000	Transferred to F4 & 6 8-27-87
438	Y	Y	N	N	N	N	N	N		12/13/76	TRAN-U-768		A6-3	12000	Transferred to A7 9-27-81
439	Y	Y	N	N	N	N	N	N		12/13/76	TRAN-U-768		A6-2	2750	Transferred to A7 9-27-81
440	Y	Y	N	N	N	N	N	N		12/13/76	TRAN-U-768		F6-3	7000	Transferred to F2 & 5 8-27-87
441	Y	Y	Y	N	N	N	N	N		10/07/77	TRAN-U-771		A9-4	9000	Transferred to A8 9-27-81

Table A-1. (continued).

Drum	Pack Sheet	Form 135	Form 137	Form 5480.1A	Form 5820.2A	Form 5820.2	TWPD	Other	Original Drum	Disposition Date	Shipment	2nd Shipment	Storage Location[a]	Contact Dose Rate[b] (mrem/hr)	Comments
442	Y	Y	Y	N	N	N	N	N		10/07/77	TRAN-U-771		A9-3	3000	Transferred to A8 9-27-81
443	Y	Y	Y	N	N	N	N	N		10/07/77	TRAN-U-771		A9-5	3000	Transferred to A8 9-27-81
444	Y	Y	Y	N	N	N	N	N		10/07/77	TRAN-U-771		A9-6	500	Transferred to A8 9-27-81
445	Y	Y	Y	N	N	N	N	N		10/07/77	TRAN-U-771		A8-3	3500	Transferred to A8 9-27-81
446	Y	Y	Y	N	N	N	N	N		10/07/77	TRAN-U-771		A9-7	8000	Transferred to A9 9-27-81
447	Y	Y	Y	N	N	N	N	N		10/07/77	TRAN-U-771		A8-1	2500	Transferred to A8 9-27-81
448	Y	Y	Y	N	N	N	N	N		10/07/77	TRAN-U-771		A8-4	10000	Transferred to A8 9-27-81
449	Y	Y	Y	N	N	N	N	N		10/07/77	TRAN-U-771		A8-5	3500	Transferred to A8 9-27-81
450	Y	Y	Y	N	N	N	N	N		10/07/77	TRAN-U-771		A8-2	4200	Transferred to A8 9-27-81
451	Y	Y	Y	N	N	N	N	N		10/19/77	TRAN-U-772		A10-1	5500	Transferred to A10 & B13 9-26-81
452	Y	Y	Y	N	N	N	N	N		10/19/77	TRAN-U-772		B14-5	12500	Transferred to C12 & B14 9-26-81
453	Y	Y	Y	N	N	N	N	N		10/19/77	TRAN-U-772		A10-3	6000	Transferred to A10 & B13 9-26-81
454	Y	Y	Y	N	N	N	N	N		10/19/77	TRAN-U-772		A10-2	9000	Transferred to A10 & B13 9-26-81
455	Y	Y	Y	N	N	N	N	N		10/19/77	TRAN-U-772		A10-4	15000	Transferred to A10 & B13 9-26-81
456	Y	Y	Y	N	N	N	N	N		10/19/77	TRAN-U-772		A10-5	10000	Transferred to A10 & B13 9-26-81
457	Y	Y	Y	N	N	N	N	N		10/19/77	TRAN-U-772		A9-1	2500	Transferred to A9 9-27-81
458	Y	Y	Y	N	N	N	N	N		10/19/77	TRAN-U-772		B13-2	14000	Transferred to A10 & B13 9-26-81
459	Y	Y	Y	N	N	N	N	N		10/19/77	TRAN-U-772		A10-6	12000	Transferred to A10 & B13 9-26-81
460	Y	Y	Y	N	N	N	N	N		10/19/77	TRAN-U-772		B17-11	15000	Discrepancies in vault log files. Transferred to A9 9-27-81

Table A-1. (continued).

Drum	Pack Sheet	Form 135	Form 137	Form 5480.1A	Form 5820.2A	Form 5820.2	TWPD	Other	Original Drum	Disposition Date	Shipment	2nd Shipment	Storage Location[a]	Contact Dose Rate[b] (mrem/hr)	Comments
461	Y	Y	Y	N	N	N	N	N		11/01/77	TRAN-U-773		A12-3	10100	Transferred 9-19-81
462	Y	Y	Y	N	N	N	N	N		11/01/77	TRAN-U-773		A12-2	5000	Transferred 9-19-81
463	Y	Y	Y	N	N	N	N	N		11/01/77	TRAN-U-773		A18-11	2600	Transferred 8-29-85
464	Y	Y	Y	N	N	N	N	N		11/01/77	TRAN-U-773		A12-4	1600	Transferred 9-19-81
465	Y	Y	Y	N	N	N	N	N		11/01/77	TRAN-U-773		A12-1	7200	Transferred 9-19-81
466	Y	Y	Y	N	N	N	N	N		11/01/77	TRAN-U-773		A7-2	800	Transferred to A7 9-27-81
467	Y	Y	Y	N	N	N	N	N		11/01/77	TRAN-U-773		A7-1	800	Transferred to A7 9-27-81
468	Y	Y	Y	N	N	N	N	N		11/01/77	TRAN-U-773		A12-5	14000	Transferred 9-19-81
469	Y	Y	Y	N	N	N	N	N		11/01/77	TRAN-U-773		A7-3	3500	Transferred to A7 9-27-81
470	Y	Y	Y	N	N	N	N	N		11/01/77	TRAN-U-773		A7-4	8500	Transferred to A7 9-27-81
471	Y	N	N	N	N	N	N	N		09/12/78	TRAN-U-774		A14-5	6500	Vault log for storage
472	Y	N	N	N	N	N	N	N		09/12/78	TRAN-U-774		C14-2	4500	
473	Y	N	N	N	N	N	N	N		09/12/78	TRAN-U-774		C14-4	9000	
474	Y	N	N	N	N	N	N	N		09/12/78	TRAN-U-774		C14-3	7500	
475	Y	N	N	N	N	N	N	N		09/12/78	TRAN-U-774		A13-5	14000	
476	Y	N	N	N	N	N	N	N		09/12/78	TRAN-U-774		C14-1	13000	
477	Y	N	Y	N	N	N	N	N		09/21/78	TRAN-U-775		C13-5	6000	
478	Y	N	Y	N	N	N	N	N		09/21/78	TRAN-U-775		C12-2	5000	
479	Y	CR[c]	N	N	N	N	N	N		10/02/78	TRAN-U-788		C10-4	6000	Can't read 136, linked based on RWMIS
480	Y	Y	N	N	N	N	N	N		10/02/78	TRAN-U-788		C10-1	3500	
481	Y	Y	Y	N	N	N	N	N		09/21/78	TRAN-U-775		C13-3	4000	
482	Y	Y	Y	N	N	N	N	N		09/21/78	TRAN-U-775		C13-2	10000	
483	Y	Y	Y	N	N	N	N	N		09/21/78	TRAN-U-775		C13-4	1600	
484	Y	Y	N	N	N	N	N	N		10/02/78	TRAN-U-788		C11-3	350	

Table A-1. (continued).

Drum	Pack Sheet	Form 135	Form 137	Form 5480.1A	Form 5820.2A	Form 5820.2	TWPD	Other	Original Drum	Disposition Date	Shipment	2nd Shipment	Storage Location[a]	Contact Dose Rate[b] (mrem/hr)	Comments
485	Y	N	N	N	N	N	N	N		09/12/78	TRAN-U-774		A13-2	600	Vault log for disposition date
486	Y	N	N	N	N	N	N	N		09/12/78	TRAN-U-774		A13-3	2000	Vault log for disposition date
487	Y	N	N	N	N	N	N	N		09/12/78	TRAN-U-774		A13-4	1400	Vault log for disposition date
488	Y	N	N	N	N	N	N	N		09/12/78	TRAN-U-774		A13-1	750	Vault log for disposition date
489	Y	N	Y	N	N	N	N	N		09/21/78	TRAN-U-775		C12-1	450	
490	Y	CR[c]	N	N	N	N	N	N		10/02/78	TRAN-U-788		C10-3	1000	Can't read 136, linked based on RWMIS
491	Y	Y	N	N	N	N	N	N		10/02/78	TRAN-U-788		C11-4	2500	
492	Y	N	Y	N	N	N	N	N		09/21/78	TRAN-U-775		C12-4	6000	
493	Y	N	Y	N	N	N	N	N		09/21/78	TRAN-U-775		C12-3	5000	
494	Y	Y	N	N	N	N	N	N		10/02/78	TRAN-U-788		C10-2	3000	
495	Y	CR[c]	N	N	N	N	N	N		10/02/78	TRAN-U-788		C10-5	15000	Can't read 136, linked based on RWMIS
496	Y	Y	N	N	N	N	N	N		10/02/78	TRAN-U-788		C11-5	6000	
497	Y	Y	Y	N	N	N	N	N		09/21/78	TRAN-U-775		C13-1	5500	
498	Y	CR[c]	N	N	N	N	N	N		10/02/78	TRAN-U-788		C11-2	4000	Can't read 136, linked based on RWMIS
499	Y	Y	Y	N	N	N	N	N		09/21/78	TRAN-U-775		C14-5	2500	
500	Y	Y	Y	N	N	N	N	N		10/16/78	TRAN-U-789		B9-3	2400	
501	Y	Y	Y	N	N	N	N	N		08/25/82	TRAN-U-8210	22245	C18-4	15000	
502	Y	Y	Y	N	N	N	N	N		08/25/82	TRAN-U-8210	22245	C18-2	11000	
503	Y	Y	Y	N	N	N	N	N		08/24/83	TRAN-U-837	35135	F25-5	2200	
504	Y	Y	Y	N	N	N	N	N		09/02/82	TRAN-U-8213		C19-8	2500	
505	Y	Y	Y	N	N	N	N	N		09/02/82	TRAN-U-8213		C19-6	5000	
506	Y	Y	Y	N	N	N	N	N		08/02/82	TRAN-U-829	22306	B19-5	500	
507	Y	Y	Y	N	N	N	N	N		08/02/82	TRAN-U-829	22306	B19-7	8000	

Table A-1. (continued).

Drum	Pack Sheet	Form 135	Form 137	Form 5480.1A	Form 5820.2A	Form 5820.2	TWPD	Other	Original Drum	Disposition Date	Shipment	2nd Shipment	Storage Location[a]	Contact Dose Rate[b] (mrem/hr)	Comments
508	Y	Y	Y	N	N	N	N	N		08/02/82	TRAN-U-829	22306	B19-6	9000	
509	Y	Y	Y	N	N	N	N	N		08/02/82	TRAN-U-829	22306	B19-8	1500	
510	Y	Y	Y	N	N	N	N	N		08/02/82	TRAN-U-829	22306	B19-9	900	
511	Y	Y	Y	N	N	N	N	N		06/28/82	TRAN-U-821	22306	A18-2	400	
512	Y	Y	Y	N	N	N	N	N		08/02/82	TRAN-U-829		B19-1	3000	
513	Y	Y	Y	N	N	N	N	N		08/02/82	TRAN-U-829	22306	B19-10	450	
514	Y	N	CR[c]	N	N	N	N	N		06/28/82	TRAN-U-821		A18-3	400	Disposition & storage based on vault log.
515	Y	Y	Y	N	N	N	N	N		07/26/82	TRAN-U-822		B18-5	2500	
516	Y	N	CR[c]	N	N	N	N	N		06/28/82	TRAN-U-821		A18-1	2000	Disposition & storage based on vault log.
517	Y	Y	Y	N	N	N	N	N		07/26/82	TRAN-U-822		B18-3	3000	
518	Y	Y	Y	N	N	N	N	N		08/25/81	TRAN-U-814		A16-9	3000	
519	Y	Y	Y	N	N	N	N	N		08/25/81	TRAN-U-814		A16-7	11000	
520	Y	Y	Y	N	N	N	N	N		07/26/82	TRAN-U-822		B18-6	400	
521	Y	Y	Y	N	N	N	N	N		08/25/81	TRAN-U-814		A16-8	1500	
522	Y	N	Y	N	N	N	N	N		08/13/82	TRAN-U-8211		C16-7	3000	Disposition & storage based on vault log.
523	N	Y	Y	N	N	N	N	N		09/23/82	TRAN-U-8221	19367	B13-4	1500	
524	Y	Y	Y	N	N	N	N	N		08/19/82	TRAN-U-8212	22309	C17-1	2000	
525	Y	Y	Y	N	N	N	N	N		09/17/82	TRAN-U-8217		B19-11	800	
526	Y	Y	Y	N	N	N	N	N		08/19/82	TRAN-U-8212	22309	C17-8	500	
527	Y	Y	Y	N	N	N	N	N		09/17/82	TRAN-U-8217		B21-1	350	
528	Y	Y	Y	N	N	N	N	N		08/19/82	TRAN-U-8212	22309	C17-3	15000	
529	Y	Y	Y	N	N	N	N	N		08/19/82	TRAN-U-8212	22309	C17-4	1500	
530	Y	Y	Y	N	N	N	N	N		08/19/82	TRAN-U-8212	22309	C17-5	1500	

Table A-1. (continued).

Drum	Pack Sheet	Form 135	Form 137	Form 5480.1A	Form 5820.2A	Form 5820.2	TWPD	Other	Original Drum	Disposition Date	Shipment	2nd Shipment	Storage Location[a]	Contact Dose Rate[b] (mrem/hr)	Comments
531	Y	Y	Y	N	N	N	N	N		08/24/83	TRAN-U-837	35135	F24-3	12000	
532	Y	Y	Y	N	N	N	N	N		09/02/82	TRAN-U-8213		C19-3	10500	
533	Y	N	Y	N	N	N	N	N		08/13/82	TRAN-U-8211		C16-10	12000	
534	Y	N	Y	N	N	N	N	N		08/13/82	TRAN-U-8211		C16-9	30000	
535	Y	N	Y	N	N	N	N	N		08/13/82	TRAN-U-8211		C16-6	800	
536	Y	N	Y	N	N	N	N	N		08/13/82	TRAN-U-8211		C16-8	400	
537	Y	N	N	N	N	N	N	N		10/30/90	TR9011		C54-5	1500	
538	Y	N	N	N	N	N	N	N		10/30/90	TR9011		C54-2	4000	
539	Y	N	N	N	N	N	N	N		10/30/90	TR9011		C54-3	12000	
540	Y	N	N	N	N	N	N	N		10/30/90	TR9011		C54-4	300	
541	Y	N	N	N	N	N	N	N		10/30/90	TR9011		C55-4	800	
542	Y	N	N	N	N	N	N	N		10/30/90	TR9011		C55-5	4000	
543	Y	N	N	N	N	N	N	N		10/30/90	TR9011		C54-1	2000	
544	Y	Y	Y	N	N	N	N	N		08/19/82	TRAN-U-8212	22309	C17-9	6000	
545	Y	Y	Y	N	N	N	N	N		08/19/82	TRAN-U-8212	22309	C17-2	10300	
546	Y	Y	Y	N	N	N	N	N		08/19/82	TRAN-U-8212	22309	C17-10	10000	
547	Y	Y	Y	N	N	N	N	N		09/02/82	TRAN-U-8213		C19-10	15000	
548	Y	Y	Y	N	N	N	N	N		08/24/83	TRAN-U-837	35135	F24-4	12000	
549	Y	Y	Y	N	N	N	N	N		08/24/83	TRAN-U-837	35135	F25-1	20000	
550	Y	Y	Y	N	N	N	N	N		09/02/82	TRAN-U-8213	223110	C19-1	15000	
551	Y	Y	Y	N	N	N	N	N		09/02/82	TRAN-U-8213	223110	C19-5	6000	
552	Y	Y	Y	N	N	N	N	N		09/02/82	TRAN-U-8213	223110	C19-2	15000	
553	Y	Y	Y	N	N	N	N	N		09/17/82	TRAN-U-8217		A21-1	6000	
554	Y	Y	Y	N	N	N	N	N		08/19/82	TRAN-U-8212	22309	C17-6	15000	

Table A-1. (continued).

Drum	Pack Sheet	Form 135	Form 137	Form 5480.1A	Form 5820.2A	Form 5820.2	TWPD	Other	Original Drum	Disposition Date	Shipment	2nd Shipment	Storage Location[a]	Contact Dose Rate[b] (mrem/hr)	Comments
555	Y	Y	Y	N	N	N	N	N		08/25/82	TRAN-U-8210	22245	C18-7	9000	
556	Y	Y	Y	N	N	N	N	N		08/24/83	TRAN-U-837	35135	F25-3	12000	
557	Y	Y	Y	N	N	N	N	N		09/17/82	TRAN-U-8217		A21-2	18000	
558	Y	Y	Y	N	N	N	N	N		09/17/82	TRAN-U-8217		B21-4	16000	
559	Y	Y	Y	N	N	N	N	N		09/17/82	TRAN-U-8217	14354	A21-4	6000	
560	Y	Y	Y	N	N	N	N	N		08/24/83	TRAN-U-837A	35135	F24-1	800	Can't read 137, linked with shipment number to 137
561	Y	Y	Y	N	N	N	N	N		08/25/82	TRAN-U-8210	22245	C18-5	10000	
562	Y	Y	Y	N	N	N	N	N		08/25/82	TRAN-U-8210	22245	C18-6	10000	
563	Y	Y	Y	N	N	N	N	N		09/17/82	TRAN-U-8217	14354	A21-3	4000	
564	Y	Y	Y	N	N	N	N	N		08/19/82	TRAN-U-8212	22309	C17-7	2500	
565	Y	Y	Y	N	N	N	N	N		08/25/82	TRAN-U-8210	22245	C18-3	2750	
566	Y	Y	Y	N	N	N	N	N		08/25/82	TRAN-U-8210	22245	C18-9	2500	
567	Y	N	Y	N	N	N	N	N		08/13/82	TRAN-U-8211		C16-3	3000	
568	Y	Y	Y	N	N	N	N	N		08/24/83	TRAN-U-837A	35135	F25-2	200	Can't read 137, linked with shipment number to 137
569	Y	N	Y	N	N	N	N	N		08/13/82	TRAN-U-8211		C16-2	8000	
570	Y	Y	Y	N	N	N	N	N		08/24/83	TRAN-U-837A	35135	F24-5	4500	Can't read 137, linked with shipment number to 137
571	Y	N	Y	N	N	N	N	N		08/13/82	TRAN-U-8211		C16-1	300	
572	Y	N	Y	N	N	N	N	N		08/13/82	TRAN-U-8211		C16-4	10000	
573	Y	Y	Y	N	N	N	N	N		08/24/83	TRAN-U-837A	35135	F24-2	800	
574	Y	N	Y	N	N	N	N	N		08/13/82	TRAN-U-8211		C16-5	500	
575	Y	Y	Y	N	N	N	N	N		09/17/81	TRAN-U-816		B16-10	600	
576	Y	Y	Y	N	N	N	N	N		09/25/81	TRAN-U-819		B17-4	10000	
577	Y	Y	Y	N	N	N	N	N		09/25/81	TRAN-U-819		B17-9	7000	

Table A-1. (continued).

Drum	Pack Sheet	Form 135	Form 137	Form 5480.1A	Form 5820.2A	Form 5820.2	TWPD	Other	Original Drum	Disposition Date	Shipment	2nd Shipment	Storage Location[a]	Contact Dose Rate[b] (mrem/hr)	Comments
578	Y	Y	Y	N	N	N	N	N		09/25/81	TRAN-U-819		B17-7	2500	
579	Y	Y	Y	N	N	N	N	N		09/25/81	TRAN-U-819		B17-10	10300	
580	Y	Y	Y	N	N	N	N	N		09/17/81	TRAN-U-816		B16-2	2500	
581	Y	Y	Y	N	N	N	N	N		09/17/81	TRAN-U-816		B16-5	300	
582	Y	Y	Y	N	N	N	N	N		09/17/81	TRAN-U-816		B16-4	3000	
583	Y	Y	Y	N	N	N	N	N		09/17/81	TRAN-U-816		B16-9	7000	
584	Y	Y	Y	N	N	N	N	N		09/17/81	TRAN-U-816		B16-3	2500	
585	Y	Y	Y	N	N	N	N	N		09/25/81	TRAN-U-819		B17-3	380	
586	Y	Y	N	N	N	N	N	N		09/25/81	TRAN-U-819		B17-6	6000	
587	Y	Y	Y	N	N	N	N	N		09/17/81	TRAN-U-816		B16-1	5000	
588	Y	N	N	N	N	N	N	N		06/28/82	TRAN-U-821		A18-9	4500	
589	Y	N	Y	N	N	N	N	N		06/28/82	TRAN-U-821		A18-10	2000	Can't read 137
590	Y	N	Y	N	N	N	N	N		06/28/82	TRAN-U-821		A18-8	2500	Can't read 137
591	Y	Y	Y	N	N	N	N	N		09/17/81	TRAN-U-816		B16-6	2000	
592	Y	Y	Y	N	N	N	N	N		09/17/81	TRAN-U-816		B16-7	1500	
593	Y	Y	Y	N	N	N	N	N		09/17/81	TRAN-U-816		B16-8	25000	
594	Y	Y	Y	N	N	N	N	N		09/25/81	TRAN-U-819		B17-8	8000	
595	Y	Y	Y	N	N	N	N	N		08/09/82	TRAN-U-8214	22311	C15-9	1200	
596	Y	Y	Y	N	N	N	N	N		08/09/82	TRAN-U-8214	22311	C15-7	11000	
597	Y	Y	Y	N	N	N	N	N		08/09/82	TRAN-U-8214	22311	C15-8	1800	
598	Y	Y	Y	N	N	N	N	N		08/09/82	TRAN-U-8214	22311	C15-10	28000	
599	Y	Y	Y	N	N	N	N	N		08/09/82	TRAN-U-8214	22311	C15-6	25000	
600	Y	Y	Y	N	N	N	N	N		08/09/82	TRAN-U-8214	22311	C15-3	12000	
601	Y	N	N	Y	Y	N	Y	Y		09/22/88	TRU8802		F41-3	5000	

Table A-1. (continued).

Drum	Pack Sheet	Form 135	Form 137	Form 5480.1A	Form 5820.2A	Form 5820.2	TWPD	Other	Original Drum	Disposition Date	Shipment	2nd Shipment	Storage Location[a]	Contact Dose Rate[b] (mrem/hr)	Comments
602	Y	N	N	Y	Y	N	Y	Y		09/22/88	TRU8802		F41-2	25000	
603	Y	N	N	Y	Y	N	Y	Y		09/22/88	TRU8802		F42-4	10000	
604	Y	N	N	Y	Y	N	Y	Y		10/03/88	TRU8803		F44-2	9000	
605	Y	N	N	Y	Y	N	Y	Y		10/03/88	TRU8803		F43-3	3500	
606	Y	N	N	Y	Y	N	Y	Y		10/03/88	TRU8803		F44-4	30000	
607	Y	N	N	Y	Y	N	Y	Y		10/03/88	TRU8803		F44-5	25000	
608	Y	N	N	Y	Y	N	Y	Y		10/03/88	TRU8803		F43-4	1500	
609	Y	N	N	Y	Y	N	Y	Y		10/03/88	TRU8803		F43-2	2000	
610	Y	N	N	Y	Y	N	Y	Y		10/03/88	TRU8803		F43-1	6500	
611	Y	N	N	Y	Y	N	Y	Y		09/22/88	TRU8802		F42-1	7000	
612	Y	N	N	Y	Y	N	Y	Y		09/22/88	TRU8802		F42-5	6000	
613	Y	N	N	Y	Y	N	Y	Y		09/22/88	TRU8802		F41-5	450	
614	Y	N	N	N	N	N	N	Y		09/17/90	TR9005		A51-4	1000	ANL - ANL shipment papers.
615	Y	N	N	N	N	N	N	Y		08/27/90	TR9002		C49-5	15000	ANL - ANL shipment papers.
616	Y	N	N	N	N	N	N	Y		08/27/90	TR9002		C48-1	3000	ANL - ANL shipment papers.
617	Y	N	N	N	N	N	N	Y		09/04/90	TR9003		A49-1	500	ANL - ANL shipment papers.
618	Y	N	N	N	N	N	N	Y		09/17/90	TR9005		A51-3	2500	ANL - ANL shipment papers.
619	Y	N	N	N	N	N	N	Y		09/10/90	TR9004		C50-1	1000	ANL - ANL shipment papers.
620	Y	N	N	N	N	N	N	Y		09/04/90	TR9003		B49-4	1300	ANL - ANL shipment papers.
621	Y	N	N	N	N	N	N	Y		09/10/90	TR9004		B50-5	1500	ANL - ANL shipment papers.
622	Y	N	N	N	N	N	N	Y		09/10/90	TR9004		B50-4	4600	ANL - ANL shipment papers.
623	Y	N	N	N	N	N	N	Y		09/17/90	TR9005		A50-5	20000	ANL - ANL shipment papers.
624	Y	N	N	N	N	N	N	Y		09/04/90	TR9003		B49-3	2000	ANL - ANL shipment papers.
625	Y	N	N	N	N	N	N	Y		09/10/90	TR9004		C50-2	1300	ANL - ANL shipment papers.

Table A-1. (continued).

Drum	Pack Sheet	Form 135	Form 137	Form 5480.1A	Form 5820.2A	Form 5820.2	TWPD	Other	Original Drum	Disposition Date	Shipment	2nd Shipment	Storage Location[a]	Contact Dose Rate[b] (mrem/hr)	Comments
626	Y	N	N	N	N	N	N	Y		09/10/90	TR9004		C50-5	10000	ANL - ANL shipment papers.
627	Y	N	N	N	N	N	N	Y		09/17/90	TR9005		A51-1	2500	ANL - ANL shipment papers.
628	Y	N	N	N	N	N	N	Y		09/10/90	TR9004		B50-1	1600	ANL - ANL shipment papers.
629	Y	N	N	N	N	N	N	Y		09/10/90	TR9004		C50-4	4000	ANL - ANL shipment papers.
630	Y	N	N	N	N	N	N	Y		09/10/90	TR9004		C50-3	2500	ANL - ANL shipment papers.
631	Y	N	N	N	N	N	N	Y		09/10/90	TR9004		B50-2	4500	ANL - ANL shipment papers.
632	Y	N	N	N	N	N	N	Y		09/10/90	TR9004		B50-3	3500	ANL - ANL shipment papers.
633	Y	N	N	N	N	N	N	Y		09/17/90	TR9005		A50-4	8000	ANL - ANL shipment papers.
634	Y	N	N	N	N	N	N	Y		09/17/90	TR9005		A50-3	17000	ANL - ANL shipment papers.
635	Y	N	N	N	N	N	N	Y		09/17/90	TR9005		A51-2	25000	ANL - ANL shipment papers.
636	Y	N	N	N	N	N	N	Y		09/17/90	TR9005		A50-2	10000	ANL - ANL shipment papers.
637	Y	N	N	Y	Y	Y	Y	Y		09/14/88	TRU8801		F27-2	10000	ANL - ANL shipment papers.
638	Y	N	N	Y	Y	N	Y	Y		10/03/88	TRU8803		F44-1	9500	
639	Y	N	N	N	N	N	N	Y		08/21/90	TRU9001		A48-1	4000	ANL - ANL shipment papers.
640	Y	N	N	Y	Y	Y	Y	N		09/14/88	TRU8801		F27-3	17000	
641	Y	N	N	N	Y	Y	Y	N		08/24/87	TRU874		E442	6500	
642	Y	Y	N	N	Y	N	Y	N		08/24/87	TRU874		E45-2	11000	
643	Y	Y	N	N	Y	N	Y	N		08/24/87	TRU874		E45-1	28000	
644	Y	N	N	N	N	N	N	Y		08/21/90	TRU9001		B48-4	15000	ANL - ANL shipment papers.
645	Y	N	N	N	N	N	N	Y		08/21/90	TRU9001		B48-1	29000	ANL - ANL shipment papers.
646	Y	N	N	N	N	N	N	Y		08/21/90	TRU9001		B48-3	22000	ANL - ANL shipment papers.
647	Y	N	N	N	N	N	N	Y		08/21/90	TRU9001		A48-5	1800	ANL - ANL shipment papers.
648	Y	N	N	N	N	N	N	Y		08/21/90	TRU9001		B48-5	9000	ANL - ANL shipment papers.
649	Y	N	N	N	N	N	N	Y		08/21/90	TRU9001		A48-4	2500	ANL - ANL shipment papers.

Table A-1. (continued).

Drum	Pack Sheet	Form 135	Form 137	Form 5480.1A	Form 5820.2A	Form 5820.2	TWPD	Other	Original Drum	Disposition Date	Shipment	2nd Shipment	Storage Location[a]	Contact Dose Rate[b] (mrem/hr)	Comments
650	Y	N	N	N	N	N	N	Y		08/21/90	TRU9001		A48-2	1800	ANL - ANL shipment papers.
651	Y	N	N	N	N	N	N	Y		08/21/90	TRU9001		B48-2	8000	ANL - ANL shipment papers.
652	Y	N	N	N	N	N	N	Y		08/21/90	TRU9001		A48-3	6200	ANL - ANL shipment papers.
653	Y	N	N	N	N	N	N	Y		09/24/90	TR9006		B51-1	30000	ANL - ANL shipment papers.
654	Y	N	N	N	Y	N	Y	N		08/24/87	TRU874		E44-4	1500	
655	Y	N	N	N	Y	Y	Y	N		08/17/87	TRU873		D41-2	17000	
656	Y	N	N	N	Y	Y	Y	N		08/17/87	TRU873		D40-2	6000	
657	Y	N	N	N	Y	Y	Y	N		08/17/87	TRU873		D41-4	24000	
658	Y	N	N	N	Y	Y	Y	N		08/17/87	TRU873		D41-3	25000	
659	Y	N	N	N	Y	Y	Y	N		08/10/87	TRU872		D43-1	30000	
660	Y	N	N	N	Y	Y	Y	N		08/10/87	TRU872		D43-3	9000	
661	Y	N	N	N	Y	Y	Y	N		08/24/87	TRU874		E45-5	8000	
662	Y	N	N	N	Y	Y	Y	N		08/24/87	TRU874		E44-5	600	
663	Y	N	N	N	N	N	N	N		09/24/90	TR9006		C51-4	10000	ANL - ANL shipment papers.
664	Y	N	N	N	N	N	N	Y		09/17/90	TR9005		A51-5	2500	ANL - ANL shipment papers.
665	Y	N	N	N	N	N	N	Y		09/24/90	TR9006		B51-5	6000	ANL - ANL shipment papers.
666	Y	N	N	N	N	N	N	Y		09/24/90	TR9006		C51-3	4000	ANL - ANL shipment papers.
667	Y	N	N	N	N	N	N	Y		09/24/90	TR9006		C51-5	8000	ANL - ANL shipment papers.
668	Y	N	N	N	N	N	N	Y		09/24/90	TR9006		B51-2	28000	ANL - ANL shipment papers.
669	Y	N	N	N	N	N	N	Y		09/24/90	TR9006		C51-1	24000	ANL - ANL shipment papers.
670	Y	N	N	N	N	N	N	Y		09/04/90	TR9003		A49-3	8000	ANL - ANL shipment papers.
671	Y	N	N	N	N	N	N	Y		09/04/90	TR9003		B49-5	8000	ANL - ANL shipment papers.
672	Y	N	N	N	N	N	N	Y		09/04/90	TR9003		B49-2	4000	ANL - ANL shipment papers.
673	Y	N	N	N	N	N	N	Y		09/04/90	TR9003		B49-1	6000	ANL - ANL shipment papers.

Table A-1. (continued).

Drum	Pack Sheet	Form 135	Form 137	Form 5480.1A	Form 5820.2A	Form 5820.2	TWPD	Other	Original Drum	Disposition Date	Shipment	2nd Shipment	Storage Location[a]	Contact Dose Rate[b] (mrem/hr)	Comments
674	Y	N	N	N	N	N	N	Y		09/04/90	TR9003		A49-5	2500	ANL - ANL shipment papers.
675	Y	N	N	N	N	N	N	Y		09/04/90	TR9003		A49-4	3000	ANL - ANL shipment papers.
676	Y	N	N	N	N	N	N	Y		09/04/90	TR9003		A49-2	2000	ANL - ANL shipment papers.
677	Y	N	N	N	N	N	N	Y		09/17/90	TR9005		A50-1	8500	ANL - ANL shipment papers.
678	Y	N	N	N	N	N	N	Y		09/24/90	TR9006		B51-4	6500	ANL - ANL shipment papers.
679	Y	N	N	N	N	N	N	Y		08/27/90	TR9002		C49-3	4000	ANL - ANL shipment papers.
680	Y	N	N	N	N	N	N	Y		08/27/90	TR9002		C49-1	2500	ANL - ANL shipment papers.
681	Y	N	N	N	N	N	N	Y		08/27/90	TR9002		C48-3	4000	ANL - ANL shipment papers.
682	Y	N	N	N	N	N	N	Y		08/27/90	TR9002		C48-5	1600	ANL - ANL shipment papers.
683	Y	N	N	N	N	N	N	Y		08/27/90	TR9002		C48-2	5000	ANL - ANL shipment papers.
684	Y	N	N	N	N	N	N	Y		08/27/90	TR9002		C49-2	1500	ANL - ANL shipment papers.
685	Y	N	N	N	N	N	N	Y		08/27/90	TR9002		C49-4	2500	ANL - ANL shipment papers.
686	Y	N	N	N	N	N	N	Y		08/27/90	TR9002		C48-4	4000	ANL - ANL shipment papers.
687	N	N	N	N	N	N	N	N		09/24/90	TR9006		C51-2	25000	
688	N	N	N	N	N	N	N	N		10/01/90	TR9007		B52-1	16000	
689	N	N	N	N	N	N	N	N		10/01/90	TR9007		B52-2	20000	
690	N	N	N	N	N	N	N	N		10/01/90	TR9007		B52-3	9500	
691	N	N	N	N	N	N	N	N		10/01/90	TR9007		B52-4	25000	
692	N	N	N	N	N	N	N	N		10/01/90	TR9007		C52-1	2600	
693	N	N	N	N	N	N	N	N		10/01/90	TR9007		C52-3	2000	
694	N	N	N	N	N	N	N	N		10/01/90	TR9007		C52-2	1800	
695	N	N	N	N	N	N	N	N		10/01/90	TR9007		C52-5	1600	
696	N	N	N	N	N	N	N	N		10/01/90	TR9007		B52-5	2600	
697	N	N	N	N	N	N	N	N		10/01/90	TR9007		C52-4	2500	

Table A-1. (continued).

Drum	Pack Sheet	Form 135	Form 137	Form 5480.1A	Form 5820.2A	Form 5820.2	TWPD	Other	Original Drum	Disposition Date	Shipment	2nd Shipment	Storage Location[a]	Contact Dose Rate[b] (mrem/hr)	Comments
698	N	N	N	N	N	N	N	N		10/08/90	TR9008		A53-5	4000	
699	N	N	N	N	N	N	N	N		10/08/90	TR9008		A53-1	7500	
700	N	N	N	N	N	N	N	N		10/08/90	TR9008		A53-2	4800	
701	N	N	N	N	N	N	N	N		10/08/90	TR9008		A53-3	4000	
702	N	N	N	N	N	N	N	N		10/08/90	TR9008		A53-4	5200	
703	N	N	N	N	N	N	N	N		10/08/90	TR9008		A52-2	4500	
704	N	N	N	N	N	N	N	N		10/08/90	TR9008		A52-5	10000	
705	N	N	N	N	N	N	N	N		10/08/90	TR9008		A52-4	6000	
706	N	N	N	N	N	N	N	N		10/08/90	TR9008		A52-3	2300	
707	N	N	N	N	N	N	N	N		10/08/90	TR9008		A52-1	3000	
708	N	N	N	N	N	N	N	N		10/15/90	TR9009		C53-1	23000	
709	N	N	N	N	N	N	N	N		10/15/90	TR9009		C53-4	8000	
710	N	N	N	N	N	N	N	N		10/15/90	TR9009		B53-2	1400	
711	N	N	N	N	N	N	N	N		10/15/90	TR9009		C53-5	9000	
712	N	N	N	N	N	N	N	N		10/15/90	TR9009		C53-3	6500	
713	N	N	N	N	N	N	N	N		10/15/90	TR9009		B53-1	2000	
714	N	N	N	N	N	N	N	N		10/15/90	TR9009		C53-2	2600	
715	N	N	N	N	N	N	N	N		10/15/90	TR9009		B53-5	8000	
716	N	N	N	N	N	N	N	N		10/15/90	TR9009		B53-4	3500	
717	N	N	N	N	N	N	N	N		10/15/90	TR9009		B53-3	3200	
718	N	N	N	N	N	N	N	N		10/23/90	TR9010		A54-1	7000	
719	N	N	N	N	N	N	N	N		10/23/90	TR9010		A54-2	14000	
720	N	N	N	N	N	N	N	N		10/23/90	TR9010		A54-5	14000	
721	N	N	N	N	N	N	N	N		10/23/90	TR9010		A54-4	3800	

Table A-1. (continued).

Drum	Pack Sheet	Form 135	Form 137	Form 5480.1A	Form 5820.2A	Form 5820.2	TWPD	Other	Original Drum	Disposition Date	Shipment	2nd Shipment	Storage Location[a]	Contact Dose Rate[b] (mrem/hr)	Comments
722	N	N	N	N	N	N	N	N		10/23/90	TR9010		B54-5	1000	
723	N	N	N	N	N	N	N	N		10/23/90	TR9010		A54-3	7000	
724	N	N	N	N	N	N	N	N		10/23/90	TR9010		B54-3	1200	
725	N	N	N	N	N	N	N	N		10/23/90	TR9010		B54-2	3800	
726	N	N	N	N	N	N	N	N		10/23/90	TR9010		B54-4	4000	
727	N	N	N	N	N	N	N	N		10/23/90	TR9010		B54-1	450	
728	N	N	N	N	N	N	N	N		05/08/93	ALE93001		A55-4	3500	
729	N	N	N	N	N	N	N	N		05/08/93	ALE93001		A55-5	1900	
730	N	N	N	N	N	N	N	N		05/08/93	ALE93001		A55-3	4000	
731	N	N	N	N	N	N	N	N		05/08/93	ALE93001		A55-2	15000	
732	N	N	N	N	N	N	N	N		05/08/93	ALE93001		A55-1	3500	
733	N	N	N	N	N	N	N	N		05/08/93	ALE93001		B55-2	500	
734	N	N	N	N	N	N	N	N		05/08/93	ALE93001		B55-1	27000	
735	N	N	N	N	N	N	N	N		05/08/93	ALE93001		B55-4	250	
736	N	N	N	N	N	N	N	N		05/08/93	ALE93001		B55-5	12000	
737	N	N	N	N	N	N	N	N		05/08/93	ALE93001		B55-3	4000	
738	N	N	N	N	N	N	N	Y		05/13/93	ALE93002		WMF628	4000	No link to WSP
739	N	N	N	N	N	N	N	Y		05/13/93	ALE93002		WMF628	6000	No link to WSP
740	N	N	N	N	N	N	N	Y		05/13/93	ALE93002		B56-2	25000	No link to WSP
741	N	N	N	N	N	N	N	Y		05/13/93	ALE93002		B56-3	8000	No link to WSP
742	N	N	N	N	N	N	N	Y		05/13/93	ALE93002		WMF628	2500	No link to WSP
743	N	N	N	N	N	N	N	Y		05/13/93	ALE93002		WMF628	450	No link to WSP
744	N	N	N	N	N	N	N	Y		05/13/93	ALE93002		WMF628	4000	No link to WSP
745	N	N	N	N	N	N	N	Y		05/13/93	ALE93002		B56-1	28000	No link to WSP

Table A-1. (continued).

Drum	Pack Sheet	Form 135	Form 137	Form 5480.1A	Form 5820.2A	Form 5820.2	TWPD	Other	Original Drum	Disposition Date	Shipment	2nd Shipment	Storage Location[a]	Contact Dose Rate[b] (mrem/hr)	Comments
746	N	N	N	N	N	N	N	Y		05/13/93	ALE93002		C56-1	29000	No link to WSP
747	N	N	N	N	N	N	N	Y		05/13/93	ALE93002		C56-2	9000	No link to WSP
748	N	N	N	N	N	N	N	N		05/19/93	ALE93003		A57-2	12000	
749	N	N	N	N	N	N	N	N		05/19/93	ALE93003		A57-1	15000	
750	N	N	N	N	N	N	N	N		05/19/93	ALE93003		A57-5	700	
751	N	N	N	N	N	N	N	N		05/19/93	ALE93003		A57-4	10000	
752	N	N	N	N	N	N	N	N		05/19/93	ALE93003		A57-3	12000	
753	N	N	N	N	N	N	N	N		05/19/93	ALE93003		A56-5	5000	
754	N	N	N	N	N	N	N	N		05/19/93	ALE93003		A56-3	2500	
755	N	N	N	N	N	N	N	N		05/19/93	ALE93003		A56-1	15000	
756	N	N	N	N	N	N	N	N		05/19/93	ALE93003		A56-2	6000	
757	N	N	N	N	N	N	N	N		05/19/93	ALE93003		A56-4	250	
758	N	N	N	N	N	N	N	N		05/24/93	ALE93004		C57-2	5000	
759	N	N	N	N	N	N	N	N		05/24/93	ALE93004		WMF628	600	
760	N	N	N	N	N	N	N	N		05/24/93	ALE93004		WMF628	1500	
761	N	N	N	N	N	N	N	N		05/24/93	ALE93004		WMF628	500	
762	N	N	N	N	N	N	N	N		05/24/93	ALE93004		WMF628	1250	
763	N	N	N	N	N	N	N	N		05/24/93	ALE93004		WMF628	300	
764	N	N	N	N	N	N	N	N		05/24/93	ALE93004		C57-1	14000	
765	N	N	N	N	N	N	N	N		05/24/93	ALE93004		C57-3	2250	
766	N	N	N	N	N	N	N	N		05/24/93	ALE93004		C57-4	2500	
767	N	N	N	N	N	N	N	N		05/24/93	ALE93004		C57-5	2000	
768	N	N	N	N	N	N	N	N		06/02/93	ALE93005		WMF628	1500	
769	N	N	N	N	N	N	N	N		06/02/93	ALE93005		WMF628	2000	

Table A-1. (continued).

Drum	Pack Sheet	Form 135	Form 137	Form 5480.1A	Form 5820.2A	Form 5820.2	TWPD	Other	Original Drum	Disposition Date	Shipment	2nd Shipment	Storage Location[a]	Contact Dose Rate[b] (mrem/hr)	Comments
770	N	N	N	N	N	N	N	N		06/02/93	ALE93005		WMF628	650	
771	Y	N	N	N	N	N	N	N		06/02/93	ALE93005		WMF628	2500	
772	Y	N	N	N	N	N	N	N		06/02/93	ALE93005		WMF628	300	
773	Y	N	N	N	N	N	N	N		06/02/93	ALE93005		C58-3	3500	
774	Y	N	N	N	N	N	N	N		06/02/93	ALE93005		C58-5	7000	
775	Y	N	N	N	N	N	N	N		06/02/93	ALE93005		C58-2	7000	
776	Y	N	N	N	N	N	N	N		06/02/93	ALE93005		C58-1	11000	
777	Y	N	Y	N	N	N	N	N		06/02/93	ALE93005		C58-4	800	
778	Y	N	Y	N	N	Y	N	N		10/19/95	ALE95001		D7-2	5500	
779	Y	Y	N	N	N	N	N	N		10/19/95	ALE95001		D7-1	1750	
780	N	N	N	N	N	Y	N	N		10/19/95	ALE95001		D7-3	2000	
781	N	N	N	N	N	Y	N	N		10/19/95	ALE95001		D8-3	1600	
782	N	N	N	N	N	Y	N	N		10/19/95	ALE95001		D8-4	4000	
783	N	N	N	N	N	Y	N	N		10/19/95	ALE95001		D6-3	7000	
784	N	N	N	N	N	Y	N	N		10/19/95	ALE95001		D7-4	3000	
785	N	N	N	N	N	Y	N	N		10/19/95	ALE95001		D6-1	1500	
787	N	N	N	N	N	Y	N	N		10/19/95	ALE95001		D6-2	2400	
788	N	N	N	N	N	Y	N	N		10/19/95	ALE95001		D6-4	7300	
789	N	N	N	N	N	Y	N	N		11/13/95	ALE95002		E6-1	4000	
791	N	N	N	N	N	Y	N	N		11/13/95	ALE95002		E7-2	2900	
792	N	N	N	N	N	Y	N	N		11/13/95	ALE95002		E7-4	15500	
793	N	N	N	N	N	Y	N	N		11/13/95	ALE95002		E7-1	8000	
794	N	N	N	N	N	Y	N	N		11/13/95	ALE95002		E8-2	4600	
795	N	N	N	N	N	Y	N	N		11/13/95	ALE95002		E8-1	1000	

Table A-1. (continued).

Drum	Pack Sheet	Form 135	Form 137	Form 5480.1A	Form 5820.2A	Form 5820.2	TWPD	Other	Original Drum	Disposition Date	Shipment	2nd Shipment	Storage Location[a]	Contact Dose Rate[b] (mrem/hr)	Comments
796	N	N	N	N	N	Y	N	N		11/13/95	ALE95002		E7-3	5300	
797	N	N	N	N	N	Y	N	N		11/13/95	ALE95002		E6-4	3200	
798	N	N	N	N	N	Y	N	N		11/13/95	ALE95002		E6-2	6000	
799	N	N	N	N	N	Y	N	N		11/13/95	ALE95002		E6-3	2000	
800	N	N	N	N	N	Y	N	N		11/20/95	ALE95002		F8-4	3500	
801	N	N	N	N	N	Y	N	N		11/20/95	ALE95003		F7-4	4500	
802	N	N	N	N	N	Y	N	N		11/20/95	ALE95003		F8-2	10000	
803	N	N	N	N	N	Y	N	N		11/20/95	ALE95003		E8-3	6000	
804	N	N	N	N	N	Y	N	N		11/20/95	ALE95003		F7-1	900	
805	N	N	N	N	N	Y	N	N		11/20/95	ALE95003		F8-1	6000	
806	N	N	N	N	N	Y	N	N		11/20/95	ALE95003		F8-3	10000	
807	N	N	N	N	N	Y	N	N		11/20/95	ALE95003		F7-2	2000	
808	N	N	N	N	N	Y	N	N		11/20/95	ALE95003		F7-3	4500	
809	N	N	N	N	N	Y	N	N		11/20/95	ALE95003		E8-4	2500	
1002	N	Y	Y	N	N	N	N	N	00001002A	09/23/82	TRAN-U-8221		B13-5	1000	
1003	N	Y	Y	N	N	N	N	N	00001003A	09/02/82	TRAN-U-8213	223110	C19-4	3000	
1004	N	Y	Y	N	N	N	N	N	00001004A	09/02/82	TRAN-U-8213	223110	C19-7	4000	
1005	N	Y	Y	N	N	N	N	N	00001005A	08/24/83	TRAN-U-837A	35135	F25-4	7000	
1030	Y	Y	Y	N	N	N	N	N		08/09/82	TRAN-U-8214	22311	C15-2	2500	
1031	Y	Y	Y	N	N	N	N	N		08/09/82	TRAN-U-8214	22311	C15-1	30000	
1032	Y	Y	Y	N	N	N	N	N		08/09/82	TRAN-U-8214	22311	C15-4	5000	
1033	Y	Y	Y	N	N	N	N	N		08/09/82	TRAN-U-8214	22311	C15-5	16000	
1034	Y	Y	Y	N	N	N	N	N		08/25/82	TRAN-U-8210	22245	C18-10	28000	
1035	Y	Y	Y	N	N	N	N	N		08/25/82	TRAN-U-8210	22245	C18-8	30000	

Table A-1. (continued).

Drum	Pack Sheet	Form 135	Form 137	Form 5480.1A	Form 5820.2A	Form 5820.2	TWPD	Other	Original Drum	Disposition Date	Shipment	2nd Shipment	Storage Location[a]	Contact Dose Rate[b] (mrem/hr)	Comments
1036	Y	Y	Y	N	N	N	N	N		09/17/82	TRAN-U-8217	14354	B21-2	2000	
1039	Y	Y	Y	N	N	N	N	N		09/17/82	TRAN-U-8217	14354	B21-3	5000	
1040	Y	Y	Y	N	N	N	N	N		09/17/82	TRAN-U-8217	14354	B18-11	2000	
1041	Y	Y	Y	N	N	N	Y	N		09/10/82	TRAN-U-8216		B20-3	2000	
1042	Y	Y	Y	N	N	N	N	N		09/10/82	TRAN-U-8216		A20-4	11000	
1043	Y	Y	Y	N	N	N	N	N		09/10/82	TRAN-U-8216		A20-3	3000	
1044	Y	Y	Y	N	N	N	N	N		09/10/82	TRAN-U-8216		B20-4	400	
1045	Y	Y	Y	N	N	N	N	N		09/10/82	TRAN-U-8216		A20-2	1500	
1046	Y	Y	Y	N	N	N	N	N		09/10/82	TRAN-U-8216		A20-1	10000	
1047	Y	Y	Y	N	N	N	N	N		09/10/82	TRAN-U-8216		B20-1	8000	
1048	Y	Y	Y	N	N	N	N	N		09/10/82	TRAN-U-8216		B20-2	4000	
1049	Y	Y	Y	N	N	N	N	N		09/10/82	TRAN-U-8216		B17-11	1500	
1050	Y	Y	Y	N	N	N	N	N		09/10/82	TRAN-U-8216		B16-11	4000	
1051	Y	Y	Y	N	N	N	N	N		09/23/82	TRAN-U-8221		A11-5	800	
1052	Y	Y	Y	N	N	N	N	N		09/23/82	TRAN-U-8221		A11-4	5000	
1053	Y	Y	Y	N	N	N	N	N		09/23/82	TRAN-U-8221		A11-2	2000	
1054	Y	Y	Y	N	N	N	N	N		09/23/82	TRAN-U-8221	19367	A11-3	500	
1055	Y	Y	Y	N	N	N	N	N		09/23/82	TRAN-U-8221	19367	A11-1	4000	
1056	Y	Y	Y	N	N	N	N	N		09/23/82	TRAN-U-8221	19367	C16-11	6000	
1057	Y	Y	Y	N	N	N	N	N		09/23/82	TRAN-U-8221	19367	B13-3	8000	
1058	Y	N	N	N	Y	Y	Y	N		09/08/87	TRU877		F40-3	15000	
1059	Y	N	N	N	Y	Y	Y	N		09/08/87	TRU877		F40-1	15000	
1060	Y	Y	Y	N	N	N	N	N		09/23/82	TRAN-U-8221	19367	C19-11	1200	
1061	Y	Y	Y	N	N	N	N	N		10/04/82	TRAN-U-8222	19361	C22-2	8000	

Table A-1. (continued).

Drum	Pack Sheet	Form 135	Form 137	Form 5480.1A	Form 5820.2A	Form 5820.2	TWPD	Other	Original Drum	Disposition Date	Shipment	2nd Shipment	Storage Location[a]	Contact Dose Rate[b] (mrem/hr)	Comments
1062	Y	Y	Y	N	N	N	N	N		10/04/82	TRAN-U-8222	19361	B22-4	500	
1063	Y	Y	Y	N	N	N	N	N		10/04/82	TRAN-U-8222	19361	B22-3	5000	
1064	Y	Y	Y	N	N	N	N	N		10/04/82	TRAN-U-8222	19361	C22-1	500	
1065	Y	Y	Y	N	N	N	N	N		10/04/82	TRAN-U-8222	19361	B22-2	1000	
1066	Y	Y	Y	N	N	N	N	N		10/04/82	TRAN-U-8222	19361	A22-3	5000	
1067	Y	Y	Y	N	N	N	N	N		10/04/82	TRAN-U-8222	19361	A22-2	15000	
1068	Y	Y	Y	N	N	N	N	N		10/04/82	TRAN-U-8222	19361	A22-4	250	
1069	Y	Y	Y	N	N	N	N	N		10/04/82	TRAN-U-8222	19361	B22-1	3000	
1070	Y	Y	Y	N	N	N	N	N		10/04/82	TRAN-U-8222	19361	A22-1	350	
1071	Y	N	N	N	Y	Y	Y	N		08/03/87	TRU871		D44-2	300	
1072	Y	N	N	N	Y	Y	Y	N		08/03/87	TRU871		D44-4	2000	
1073	Y	Y	Y	N	N	N	N	N	385	08/02/83	TRAN-U-835	35132	C21-1	700	
1074	Y	Y	Y	N	N	N	N	N	389	08/15/83	TRAN-U-836	35133	F22-4	500	
1075	Y	Y	Y	N	N	N	N	N		08/02/83	TRAN-U-835	35132	C20-3	8000	
1076	Y	Y	Y	N	N	N	N	N		08/02/83	TRAN-U-835	35132	C21-2	3000	
1077	Y	Y	Y	N	N	N	N	N		08/02/83	TRAN-U-835	35132	C20-4	25000	
1078	Y	Y	Y	N	N	N	N	N		08/02/83	TRAN-U-835	35132	C20-1	9000	
1079	Y	Y	Y	N	N	N	N	N		08/02/83	TRAN-U-835A	35132	C21-4	20000	
1080	Y	Y	Y	N	N	N	N	N	392	08/15/83	TRAN-U-836	35133	F23-4	400	
1081	Y	Y	Y	N	N	N	N	N	384	08/15/83	TRAN-U-836	35133	F22-5	1000	
1082	Y	Y	Y	N	N	N	N	N	388	08/02/83	TRAN-U-835A	35132	C17-11	1000	
1083	Y	Y	Y	N	N	N	N	N	366	08/02/83	TRAN-U-835A	35132	C18-11	1800	
1084	Y	Y	Y	N	N	N	N	N	382	08/02/83	TRAN-U-835A	35132	C20-2	4500	
1085	Y	Y	Y	N	N	N	N	N	375	08/02/83	TRAN-U-835A	35132	C21-3	10000	

Table A-1. (continued).

Drum	Pack Sheet	Form 135	Form 137	Form 5480.1A	Form 5820.2A	Form 5820.2	TWPD	Other	Original Drum	Disposition Date	Shipment	2nd Shipment	Storage Location[a]	Contact Dose Rate[b] (mrem/hr)	Comments
1086	Y	Y	Y	N	N	N	N	N	372	08/15/83	TRAN-U-836	35133	F23-5	3500	
1087	Y	Y	Y	N	N	N	N	N	383	08/15/83	TRAN-U-836	35133	F23-2	1500	
1088	Y	N	N	N	Y	Y	Y	N	380	08/24/87	TRU874		E44-3	4000	Can't read 5820.2, matched by location.
1089	N	N	N	N	Y	Y	Y	N	381	08/24/87	TRU874		E44-1	3500	Can't read 5820.2, matched by location.
1090	Y	N	N	N	N	N	N	N		08/15/83	TRAN-U-836A		F22-3	10000	
1091	Y	N	N	N	N	N	N	N		08/15/83	TRAN-U-836A		F23-3	3000	
1092	Y	N	N	N	N	N	N	N		08/15/83	TRAN-U-836A		F22-2	4500	
1093	Y	N	N	Y	Y	Y	Y	N		09/14/88	TRU8801		F26-2	5000	Can't read 5820.2, matched by location.
1094	Y	N	N	Y	Y	Y	Y	N		09/14/88	TRU8801		F27-1	10000	Can't read 5820.2, matched by location.
1095	Y	N	N	Y	Y	Y	Y	N		09/14/88	TRU8801		F26-5	5000	Can't read 5820.2, matched by location.
1096	Y	N	N	Y	N	Y	Y	N		09/14/88	TRU8801		F26-4	2000	Can't read 5820.2, matched by location.
1097	Y	N	N	Y	Y	Y	Y	N		09/14/88	TRU8801		F26-1	5000	Can't read 5820.2, matched by location.
1098	Y	N	N	N	Y	Y	Y	N		08/31/87	TRU876		E43-2	3000	
1099	Y	N	N	N	Y	N	Y	N		08/31/87	TRU876		E43-3	600	
1101	Y	N	N	N	Y	Y	Y	N		08/31/87	TRU876		E42-4	11000	
1102	Y	N	N	N	Y	Y	Y	N		08/31/87	TRU876		E43-5	1000	
1103	Y	N	N	N	Y	Y	Y	N		08/31/87	TRU876		E43-4	2000	
1104	Y	N	N	N	Y	Y	Y	N		08/03/87	TRU871		D44-3	15000	
1105	Y	N	N	Y	Y	Y	Y	N		10/03/88	TRU8803		F44-3	12000	
1106	Y	N	N	N	Y	Y	Y	N		08/24/87	TRU874		E45-3	17000	

Table A-1. (continued).

Drum	Pack Sheet	Form 135	Form 137	Form 5480.1A	Form 5820.2A	Form 5820.2	TWPD	Other	Original Drum	Disposition Date	Shipment	2nd Shipment	Storage Location[a]	Contact Dose Rate[b] (mrem/hr)	Comments
1107	Y	N	N	N	Y	N	Y	N		08/17/87	TRU873		D41-5	25000	
1108	Y	N	N	N	N	N	N	Y		09/24/90	TR9006		B51-3	2500	ANL - ANL shipment papers
1110	Y	N	N	N	N	Y	Y			08/03/87	TRU871		D45-5	12000	
1111	Y	N	N	N	Y	N	Y			08/10/87	TRU872		D42-3	5000	
1112	Y	N	N	N	Y	N	Y			08/10/87	TRU872		D42-5	15000	
1113	Y	N	N	N	Y	N	Y			08/10/87	TRU872		D42-4	3000	
1114	Y	N	N	N	Y	Y	Y			08/10/87	TRU872		D42-2	3000	
1115	Y	N	N	N	Y	Y	Y			08/03/87	TRU871		D44-5	1500	
1116	Y	N	N	N	Y	Y	Y			08/03/87	TRU871		D44-1	29000	
1117	Y	N	N	N	Y	Y	Y			08/03/87	TRU871		D45-4	3000	
1118	Y	N	N	Y	Y	Y	Y			09/14/88	TRU8801		F27-4	1500	
1119	Y	N	N	N	Y	Y	Y			08/03/87	TRU871		D45-1	2500	
1120	Y	N	N	N	Y	Y	Y			08/03/87	TRU871		D45-3	7000	
1121	Y	N	N	N	Y	Y	Y			09/08/87	TRU877		E41-2	500	
1122	Y	N	N	N	Y	Y	Y			08/03/87	TRU871		D45-2	30000	
1123	Y	N	N	N	N	Y	Y			09/08/87	TRU877		E41-1	1500	
1124	Y	N	N	N	Y	Y	Y			09/08/87	TRU877		F40-4	8000	
1125	Y	N	N	N	Y	Y	Y			08/10/87	TRU872		D42-1	15000	
1126	Y	N	N	N	Y	Y	Y			08/17/87	TRU873		D41-1	14000	
1127	Y	N	N	N	Y	Y	Y			08/17/87	TRU873		D40-1	10000	
1128	Y	N	N	N	Y	Y	Y			08/17/87	TRU873		D40-3	2000	
1129	Y	N	N	N	Y	Y	Y			08/17/87	TRU873		D40-4	6000	
1130	Y	N	N	N	Y	Y	Y			08/17/87	TRU873		E40-1	2000	
1131	Y	N	N	Y	Y	Y	Y			09/14/88	TRU8801		F26-3	500	

Table A-1. (continued).

Drum	Pack Sheet	Form 135	Form 137	Form 5480.1A	Form 5820.2A	Form 5820.2	TWPD	Other	Original Drum	Disposition Date	Shipment	2nd Shipment	Storage Location[a]	Contact Dose Rate[b] (mrem/hr)	Comments
1132	Y	N	N	N	Y	Y	Y			08/31/87	TRU876		E42-5	3000	
1133	Y	N	N	Y	Y	Y	Y			09/14/88	TRU8801		F27-5	7000	
1134	Y	N	N	N	N	Y	Y			08/31/87	TRU876		E42-1	20000	
1135	Y	N	N	N	Y	Y	Y			08/31/87	TRU876		E42-3	9000	
1136	Y	N	N	N	Y	N	Y			08/31/87	TRU876		E42-2	9000	
1137	Y	N	N	N	Y	Y	Y			09/08/87	TRU877		F40-5	400	
1138	Y	N	N	N	Y	Y	Y			09/08/87	TRU877		E41-3	3500	
1139	Y	N	N	N	Y	Y	Y			09/08/87	TRU877		F40-2	2500	
1140	Y	N	N	N	Y	Y	Y			09/08/87	TRU877		E41-5	2000	
1141	Y	N	N	N	Y	Y	Y			08/31/87	TRU876		E43-1	1500	
1142	Y	N	N	N	Y	Y	Y			09/08/87	TRU877		E41-4	500	
1143	Y	N	N	N	Y	Y	Y			08/10/87	TRU872		D43-4	2000	
1144	Y	N	N	N	Y	Y	Y			08/10/87	TRU872		D43-2	20000	
1145	Y	N	N	N	N	Y	Y			08/10/87	TRU872		D43-5	10000	
1146	Y	N	N	Y	Y	Y	Y			10/03/88	TRU8803		F43-5	8000	
1147	Y	N	N	Y	Y	Y	Y			09/22/88	TRU8802		F41-1	10000	
1148	Y	N	N	Y	Y	Y	Y			09/22/88	TRU8802		F42-3	3500	
1149	Y	N	N	Y	Y	Y	Y			09/22/88	TRU8802		F42-2	11000	
1150	Y	N	N	Y	Y	Y	Y			09/22/88	TRU8802		F41-4	1300	

a) Actual storage location maybe different.
b) Contact dose rate at the time of packaging.
c) CR is short for can't read form.

Table A-2. Argonne National Laboratory-East remote handled transuranic waste in bins.

Bin	Shipment Number	IDC	Inventory	Package Date	Contact Dose Rate[a] (mrem/hr)
IDAE000000080	156749	100	Y	06-May-75	700
IDAE000000020	152761	100	Y	21-Feb-74	650
IDAE000000074	156676	100	Y	31-Mar-75	600
IDAE000000016	152691	100	Y	20-Dec-73	500
IDAE000000121	163876	100	Y	14-Apr-76	500
IDAE000000116	163793	100	Y	03-Mar-76	350
IDAE000000068	156554	100	Y	05-Feb-75	300
IDAEP82636	22313	104	Y	09-Oct-81	1
IDAEP82637	22313	104	Y	09-Oct-81	1
IDAEP82638	22313	104	Y	09-Oct-81	2
IDAEP82639	22313	104	Y	09-Oct-81	1
IDAEP82640	22313	104	Y	12-Oct-81	1
IDAEP82641	22313	104	Y	24-Nov-81	180

a) Contact dose rate is at the time of packaging.

Appendix B

Argonne National Laboratory-West

This page is intentionally left blank.

Appendix B

Argonne National Laboratory-West

Table B-1. Argonne National Laboratory-West remote handled transuranic waste.

Drum	TRIPS	RWMIS	Container Type	IDC	Form 137	Form 5480.1A	Form 5820.2A	Form 5820.2	Form WM-135 F5480.2	Other	Disposition Date	Shipment	2nd Ship	ILTSF Location[a]	Contact Dose Rate[b] mR/hr	Comments
78-204	Y	Y	Insert	150	N	N	N	N	N	N	08/22/78	78-204		C7-1	0	No paperwork.
79-57	Y	Y	Insert	150	Y	Y	N	N	N	N	03/07/79	79-57		C6-1	0	Can't link 164 to shipment.
79-74	Y	Y	Insert	150	Y	Y	N	N	N	N	04/10/79	79-74		C5-1	0	Can't link 164 to shipment.
79-203	Y	Y	Insert	150	Y	Y	N	N	N	N	12/28/79	79-203		C7-2	0	Can't link 164 to shipment.
80-81	Y	Y	Insert	150	N	N	N	N	N	N	05/12/80	80-81		C2-1	0	No paperwork.
80-52	Y	Y	Insert	150	N	N	N	N	N	N	08/06/80	80-52		C8-1	0	No paperwork.
80-145	Y	Y	Insert	152	N	N	N	N	N	N	08/28/80	80-145		C8-2	5000	No paperwork.
80-158	Y	Y	Insert	150	N	N	N	N	N	N	09/25/80	80-158		C5-2	0	Can't link 164 to shipment. Disposition date based on vault log.
81-2	Y	N	Insert	150	Y	Y	N	N	N	N	01/07/81	1-81		B2-1	0	
81-91	Y	Y	Insert	150	Y	Y	N	N	N	Y	08/31/81	81-91		C2-2	0	Form 110. Can't link 164 to shipment.
81-81	Y	Y	Insert	150	Y	Y	N	N	N	N	10/15/81	81-81		B2-2	0	
81-122	Y	Y	Insert	150	Y	Y	N	N	N	Y	10/16/81	81-122		B3-1	0	Form 110
82-38	Y	Y	Insert	150	Y	Y	N	N	N	Y	04/09/82	82-38		B3-2	0	Form 110. Can't link 164 to shipment.
81-177	Y	Y	Insert	153	Y	Y	N	N	N	N	04/28/82	81-177		C6-2	0	Can't link 164 to shipment.
82-66	Y	Y	Insert	153	N	N	N	N	N	N	07/02/82	88-66		C4-1	0	No paperwork.
82-118	Y	Y	Insert	153	Y	Y	N	N	N	N	11/01/82	82-118		C4-2	0	
83-4	Y	Y	Insert	153	Y	N	N	N	N	Y	02/18/83	83-4		C3-1	0	Form 110. Can't link 164 to shipment.
83-20	Y	Y	Insert	153	N	Y	N	N	N	Y	04/07/83	83-20		C3-2	0	Form 110
83-133	Y	Y	Insert	153	N	N	Y	N	N	Y	12/07/83	83-133		B4-1	0	Form 110
84-008	Y	Y	Insert	150	N	N	N	N	N	N	02/24/84	84-008		B5-1	17000	
85-013	Y	Y	Insert	153	N	N	Y	Y	Y	Y	03/15/85	85-013	03-02-85	D1-1	790000	
ANL-87098	Y	Y	Insert	150	N	N	Y	Y	N	Y	04/03/87	87-098	AW87-023	B6-1	660000	

Table B-1. (continued).

Drum	TRIPS	RWMIS	Container Type	IDC	Form 137	Form 5480.1A	Form 5820.2A	Form 5820.2	Form WM-135 F5480.2	Other	Disposition Date	Shipment	2nd Ship	ILTSF Location[a]	Contact Dose Rate[b] mR/hr	Comments
ANL-87105	Y	Y	Insert	150	N	N	Y	Y	N	Y	04/21/87	87-105	AW87-029	B7-1	490000	
ANL-87107	Y	Y	Insert	150	N	N	Y	Y	N	Y	06/10/87	87-107	AW87-038	B8-1	230000	
ANL-87114	Y	Y	Insert	150	N	N	Y	Y	N	Y	08/07/87	87-114	AW87-049	E1-1	52000	
ANL-87203	Y	Y	Insert	150	N	N	N	Y	N	N	11/20/87	87-203	AW87-069	D2-1	70000	
ANL-88090	Y	Y	Insert	150	N	N	Y	Y	N	N	03/08/88	88-090	AW88-016	B6-6	6900000	
ANL-88064	Y	Y	55-gal	161	N	N	Y	Y	N	N	03/28/88	88-064	AW88-018	F10-1	4500	
ANL-88065	Y	Y	55-gal	161	N	N	Y	Y	N	N	03/28/88	88-065	AW88-018	F10-2	4000	
ANL-88130	Y	Y	Insert	160	N	N	Y	Y	N	N	04/21/88	88-130	AW88-031	E2-2	2700000	
ANL-88068	Y	Y	55-gal	161	N	N	Y	Y	N	Y	05/26/88	88-068	AW88-033	C44-2	1800	
ANL-88134	Y	Y	55-gal	161	N	N	Y	Y	N	Y	05/26/88	88-134	AW88-033	C44-1	10000	

a) Actual storage location maybe different.
b) Contact dose rate at the time of packaging.

Appendix C

Bettis Atomic Power Laboratory

This page is intentionally left blank.

Appendix C

Bettis Atomic Power Laboratory

Table C-1. Bettis Atomic Power Laboratory remote handled transuranic waste.

Insert	TRIPS Database	RWMIS Database	Container Type	IDC	Form 5480.1A	Form 5820.2A	Form WM-135 F5480.2	Other	Disposition Date	Shipment	2nd Shipment	ILTSF Location[a]	Contact Dose Rate[b] (R/hr)
ANL-88107	Y	Y	Insert	30	Y	Y	N	N	4/14/1988	88-107	AW88-025	E2-1	241
ANL-88164	Y	Y	Insert	30	Y	Y	Y	Y	5/31/1988	88-164	AW88-045	E3-1	50

a) Actual storage location maybe different.
b) The contact dose rate was measured at the time of shipment to RWMC for storage.

Table C-2. Bettis Atomic Power Laboratory U-233 contaminated waste inventory.

Overpack	Container	IDC	Overpack	Container	IDC
	IDBL000000001	10		IDBL000000634	10
	IDBL000000040	10		IDBL000000640	10
	IDBL000000057	10		IDBL000000644	10
	IDBL000000065	10		IDBL000000645	10
	IDBL000000069	10		IDBL000000649	10
	IDBL000000107	10		IDBL000000654	10
	IDBL000000111	10		IDBL000000661	10
	IDBL000000151	10		IDBL000000696	10
	IDBL000000170	10		IDBL000000720	10
	IDBL000000171	10		IDBL000000724	10
	IDBL000000179	10		IDBL000000774	10
	IDBL000000197	10		IDBL000000781	10
	IDBL000000215	10		IDBL000000782	10
	IDBL000000236	10		IDBL000000792	10
	IDBL000000238	10		IDBL000000798	10
	IDBL000000260	10		IDBL000000802	10
	IDBL000000283	10		IDBL000000810	10
	IDBL000000284	10		IDBL000000827	10
	IDBL000000326	10		IDBL000000842	10
	IDBL000000330	10		IDBL000000844	10
	IDBL000000335	10		IDBL000000847	10
	IDBL000000348	10		IDBL000000892	10
	IDBL000000377	10		IDBL000000934	10
	IDBL000000384	10		IDBL000000979	10
	IDBL000000397	10		IDBL000000982	10
	IDBL000000399	10		IDBL000000985	10
	IDBL000000408	10		IDBL000000993	10
	IDBL000000416	10		IDBL000001019	10
	IDBL000000441	10		IDBL000001067	10
	IDBL000000450	10		IDBL000001068	10
	IDBL000000452	10		IDBL000001103	10
	IDBL000000463	10		IDBL000001112	10
	IDBL000000472	10		IDBL000001113	10
	IDBL000000481	10		IDBL000001117	10
	IDBL000000534	10		IDBL000001127	10
	IDBL000000584	10		IDBL000001132	10
	IDBL000000587	10		IDBL000001136	10
	IDBL000000619	10		IDBL000001138	10
	IDBL000000624	10		IDBL000001142	10

Table C-2. (continued).

Overpack	Container	IDC	Overpack	Container	IDC
	IDBL000001145	10		IDBL000001687	10
	IDBL000001147	10		IDBL000001694	10
	IDBL000001154	10		IDBL000001706	10
	IDBL000001160	10		IDBL000001720	10
	IDBL000001163	10		IDBL000001723	10
	IDBL000001188	10		IDBL000001728	10
	IDBL000001196	10		IDBL000001732	10
	IDBL000001206	10		IDBL000001752	10
	IDBL000001208	10		IDBL000001780	10
	IDBL000001228	10		IDBL000001804	10
	IDBL000001249	10		IDBL000001806	10
	IDBL000001277	10		IDBL000001873	10
	IDBL000001290	10		IDBL000001883	10
	IDBL000001316	10		IDBL000001970	10
	IDBL000001324	10		IDBL000001992	10
	IDBL000001347	10		IDBL000002069	10
	IDBL000001353	10		IDBL000002088	10
	IDBL000001381	10		IDBL000002164	10
	IDBL000001441	10		IDBL000002421	10
	IDBL000001464	10		IDBL00000245M	10
	IDBL000001471	10		IDBL000002495	10
	IDBL000001472	10		IDBL000003004	10
	IDBL000001475	10		IDBL000003042	10
	IDBL000001495	10		IDBL000003059	10
	IDBL000001499	10		IDBL000003114	10
	IDBL000001506	10		IDBL000003162	10
	IDBL000001520	10		IDBL000003345	10
	IDBL000001541	10		IDBL000003348	10
	IDBL000001553	10		IDBL000003377	10
	IDBL000001561	10		IDBL000003385	10
	IDBL000001566	10		IDBL000003409	10
	IDBL000001594	10		IDBL000003414	10
	IDBL000001619	10		IDBL000003417	10
	IDBL000001622	10		IDBL000003451	10
	IDBL000001629	10		IDBL000003458	10
	IDBL000001643	10		IDBL000003528	10
	IDBL000001662	10		IDBL000003558	10
	IDBL000001672	10		IDBL000003568	10
	IDBL000001680	10		IDBL0000356M	10

Table C-2. (continued).

Overpack	Container	IDC	Overpack	Container	IDC
	IDBL000003586	10		IDBL000005138	10
	IDBL000003608	10		IDBL000005188	10
	IDBL000003646	10		IDBL000005194	10
	IDBL000003720	10		IDBL000005195	10
	IDBL000003725	10		IDBL000005215	10
	IDBL000003762	10		IDBL000005223	10
	IDBL000003769	10		IDBL000005224	10
	IDBL000003788	10		IDBL000005230	10
	IDBL00000379M	10		IDBL000005237	10
	IDBL000003839	10		IDBL000005240	10
	IDBL000004255	10		IDBL000005253	10
	IDBL000004379	10		IDBL000005258	10
	IDBL000004526	10		IDBL000005268	10
	IDBL000004577	10		IDBL000005271	10
	IDBL000004662	10		IDBL000005276	10
	IDBL000004683	10		IDBL000005285	10
	IDBL000004728	10		IDBL000005287	10
	IDBL000004729	10		IDBL000005296	10
	IDBL000004733	10		IDBL000005303	10
	IDBL000004758	10		IDBL000005306	10
	IDBL000004814	10		IDBL000005308	10
	IDBL000004834	10		IDBL000005310	10
	IDBL000004842	10		IDBL000005312	10
	IDBL000004854	10		IDBL000005318	10
	IDBL000004912	10		IDBL000005326	10
	IDBL000004927	10		IDBL000005339	10
	IDBL000004928	10		IDBL000005344	10
	IDBL000004966	10		IDBL000005352	10
	IDBL000005002	10		IDBL000005360	10
	IDBL000005003	10		IDBL000005381	10
	IDBL000005006	10		IDBL000005397	10
	IDBL000005024	10		IDBL000005400	10
	IDBL000005050	10		IDBL000005406	10
	IDBL000005058	10		IDBL000005416	10
	IDBL000005064	10		IDBL000005424	10
	IDBL000005071	10		IDBL000005430	10
	IDBL000005076	10		IDBL000005438	10
	IDBL000005109	10		IDBL000005446	10
	IDBL000005123	10		IDBL000005454	10

Table C-2. (continued).

Overpack	Container	IDC	Overpack	Container	IDC
	IDBL000005474	10		IDBL000006034	10
	IDBL000005483	10		IDBL000006036	10
	IDBL000005488	10		IDBL000006038	10
	IDBL000005493	10		IDBL000006047	10
	IDBL000005536	10		IDBL000006053	10
	IDBL000005547	10		IDBL000006059	10
	IDBL000005549	10		IDBL000006068	10
	IDBL000005554	10		IDBL000006075	10
	IDBL000005566	10		IDBL000006077	10
	IDBL000005589	10		IDBL000006079	10
	IDBL000005605	10		IDBL000006081	10
	IDBL000005614	10		IDBL000006086	10
	IDBL000005620	10		IDBL000006094	10
	IDBL000005622	10		IDBL000006108	10
	IDBL000005625	10		IDBL000006122	10
	IDBL000005644	10		IDBL000006134	10
	IDBL000005660	10		IDBL000006161	10
	IDBL000005671	10		IDBL000006165	10
	IDBL000005687	10		IDBL000006196	10
	IDBL000005691	10		IDBL000006205	10
	IDBL000005700	10		IDBL000006237	10
	IDBL000005702	10		IDBL000006257	10
	IDBL000005737	10		IDBL000006266	10
	IDBL000005764	10		IDBL000006269	10
	IDBL000005804	10		IDBL000006275	10
	IDBL000005809	10		IDBL000006277	10
	IDBL000005814	10		IDBL000006292	10
	IDBL000005818	10		IDBL000006298	10
	IDBL000005825	10		IDBL000006303	10
	IDBL000005826	10		IDBL000006318	10
	IDBL000005853	10		IDBL000006328	10
	IDBL000005879	10		IDBL000006330	10
	IDBL000005882	10		IDBL000006331	10
	IDBL000005927	10		IDBL000006332	10
	IDBL000005938	10		IDBL000006335	10
	IDBL000005978	10		IDBL000006340	10
	IDBL000006025	10		IDBL000006344	10
	IDBL000006029	10		IDBL000006345	10
	IDBL000006030	10		IDBL000006346	10

Table C-2. (continued).

Overpack	Container	IDC	Overpack	Container	IDC
	IDBL000006351	10		IDBL000006695	10
	IDBL000006357	10		IDBL000006704	10
	IDBL000006368	10		IDBL000006709	10
	IDBL000006375	10		IDBL000006710	10
	IDBL000006383	10		IDBL000006719	10
	IDBL000006389	10		IDBL000006728	10
	IDBL000006395	10		IDBL000006731	10
	IDBL000006402	10		IDBL000006732	10
	IDBL000006411	10		IDBL000006738	10
	IDBL000006425	10		IDBL000006752	10
	IDBL000006434	10		IDBL000006753	10
	IDBL000006448	10		IDBL000006758	10
	IDBL000006452	10		IDBL000006761	10
	IDBL000006453	10		IDBL000006763	10
	IDBL000006454	10		IDBL000006767	10
	IDBL000006467	10		IDBL000006770	10
	IDBL000006501	10		IDBL000006790	10
	IDBL000006502	10		IDBL000006796	10
	IDBL000006527	10		IDBL000006804	10
	IDBL000006528	10		IDBL000006805	10
	IDBL000006529	10		IDBL000006818	10
	IDBL000006552	10		IDBL000006824	10
	IDBL000006556	10		IDBL000006829	10
	IDBL000006560	10		IDBL000006832	10
	IDBL000006571	10		IDBL000006838	10
	IDBL000006576	10		IDBL000006841	10
	IDBL000006597	10		IDBL000006855	10
	IDBL000006598	10		IDBL000006892	10
	IDBL000006620	10		IDBL000006897	10
	IDBL000006629	10		IDBL000006901	10
	IDBL000006639	10		IDBL000006906	10
	IDBL000006649	10		IDBL000006916	10
	IDBL000006651	10		IDBL000006924	10
	IDBL000006655	10		IDBL000006927	10
	IDBL000006677	10		IDBL000006936	10
	IDBL000006681	10		IDBL000006958	10
	IDBL000006682	10		IDBL000006960	10
	IDBL000006684	10		IDBL000006963	10
	IDBL000006685	10		IDBL000006964	10

Table C-2. (continued).

Overpack	Container	IDC	Overpack	Container	IDC
	IDBL000006966	10		IDBL000007291	10
	IDBL000006970	10		IDBL000007299	10
	IDBL000006972	10		IDBL000007323	10
	IDBL000006977	10		IDBL000007353	10
	IDBL000006981	10		IDBL000007357	10
	IDBL000006983	10		IDBL000007362	10
	IDBL000006986	10		IDBL000007395	10
	IDBL000006987	10		IDBL000007396	10
	IDBL000006992	10		IDBL000007403	10
	IDBL000006995	10		IDBL000007412	10
	IDBL000007011	10		IDBL000007441	10
	IDBL000007023	10		IDBL000007443	10
	IDBL000007047	10		IDBL000007477	10
	IDBL000007055	10		IDBL000007480	10
	IDBL000007062	10		IDBL000007493	10
	IDBL000007071	10		IDBL000007514	10
	IDBL000007109	10		IDBL000007522	10
	IDBL000007117	10		IDBL000007538	10
	IDBL000007119	10		IDBL000007540	10
	IDBL000007134	10		IDBL000007544	10
	IDBL000007136	10		IDBL000007545	10
	IDBL000007141	10		IDBL000007555	10
	IDBL000007143	10		IDBL000007568	10
	IDBL000007180	10		IDBL000007576	10
	IDBL000007186	10		IDBL000007585	10
	IDBL000007204	10		IDBL000007588	10
	IDBL000007228	10		IDBL000007616	10
	IDBL000007229	10		IDBL000007623	10
	IDBL000007232	10		IDBL000007711	10
	IDBL000007236	10		IDBL000007722	10
	IDBL000007237	10		IDBL000007746	10
	IDBL000007239	10		IDBL000007766	10
	IDBL000007246	10		IDBL000007774	10
	IDBL000007248	10		IDBL000007788	10
	IDBL000007256	10		IDBL000007802	10
	IDBL000007268	10		IDBL000007803	10
	IDBL000007270	10		IDBL000007811	10
	IDBL000007271	10		IDBL000007832	10
	IDBL000007283	10		IDBL000007844	10

Table C-2. (continued).

Overpack	Container	IDC	Overpack	Container	IDC
	IDBL000007869	10		IDBL000008293	10
	IDBL000007871	10		IDBL000008297	10
	IDBL000007876	10		IDBL000008300	10
	IDBL000007889	10		IDBL000008309	10
	IDBL000007902	10		IDBL000008312	10
	IDBL000007913	10		IDBL000008316	10
	IDBL000007926	10		IDBL000008317	10
	IDBL000007948	10		IDBL000008323	10
	IDBL000007971	10		IDBL000008338	10
	IDBL000007992	10		IDBL000008379	10
	IDBL000008017	10		IDBL000008381	10
	IDBL000008037	10		IDBL000008385	10
	IDBL000008039	10		IDBL000008388	10
	IDBL000008044	10		IDBL000008389	10
	IDBL000008051	10		IDBL000008399	10
	IDBL000008056	10		IDBL000008401	10
	IDBL000008076	10		IDBL000008412	10
	IDBL000008077	10		IDBL000008413	10
	IDBL000008091	10		IDBL000008425	10
	IDBL000008110	10		IDBL000008432	10
	IDBL000008113	10		IDBL000008443	10
	IDBL000008125	10		IDBL000008452	10
	IDBL000008130	10		IDBL000008453	10
	IDBL000008136	10		IDBL000008461	10
	IDBL000008141	10		IDBL000008475	10
	IDBL000008142	10		IDBL000008479	10
	IDBL000008150	10		IDBL000008482	10
	IDBL000008161	10		IDBL000008488	10
	IDBL000008173	10		IDBL000008494	10
	IDBL000008199	10		IDBL000008499	10
	IDBL000008215	10		IDBL000008511	10
	IDBL000008223	10		IDBL000008514	10
	IDBL000008230	10		IDBL000008520	10
	IDBL000008246	10		IDBL000008522	10
	IDBL000008256	10		IDBL000008523	10
	IDBL000008264	10		IDBL000008530	10
	IDBL000008272	10		IDBL000008533	10
	IDBL000008280	10		IDBL000008547	10
	IDBL000008286	10		IDBL000008559	10

Table C-2. (continued).

Overpack	Container	IDC	Overpack	Container	IDC
	IDBL000008571	10		IDBL000008956	10
	IDBL000008576	10		IDBL000008963	10
	IDBL000008586	10		IDBL000008970	10
	IDBL000008589	10		IDBL000008986	10
	IDBL000008596	10		IDBL000008989	10
	IDBL000008603	10		IDBL000009000	10
	IDBL000008610	10		IDBL000009006	10
	IDBL000008613	10		IDBL000009029	10
	IDBL000008638	10		IDBL000009051	10
	IDBL000008640	10		IDBL000009052	10
	IDBL000008655	10		IDBL000009053	10
	IDBL000008665	10		IDBL000009055	10
	IDBL000008669	10		IDBL000009056	10
	IDBL000008672	10		IDBL000009057	10
	IDBL000008696	10		IDBL000009058	10
	IDBL000008711	10		IDBL000009059	10
	IDBL000008713	10		IDBL000009060	10
	IDBL000008745	10		IDBL000009063	10
	IDBL000008759	10		IDBL000009065	10
	IDBL000008767	10		IDBL000009066	10
	IDBL000008769	10		IDBL000009072	10
	IDBL000008788	10		IDBL000009073	10
	IDBL000008794	10		IDBL000009085	10
	IDBL000008808	10		IDBL000009090	10
	IDBL000008824	10		IDBL000009102	10
	IDBL000008826	10		IDBL000009225	10
	IDBL000008841	10		IDBL000009268	10
	IDBL000008847	10		IDBL000009316	10
	IDBL000008857	10		IDBL000009325	10
	IDBL000008867	10		IDBL000009327	10
	IDBL000008883	10		IDBL000009377	10
	IDBL000008887	10		IDBL000009381	10
	IDBL000008896	10		IDBL000009392	10
	IDBL000008897	10		IDBL000009405	10
	IDBL000008913	10		IDBL000009406	10
	IDBL000008921	10		IDBL000009408	10
	IDBL000008923	10		IDBL000009420	10
	IDBL000008942	10		IDBL000009476	10
	IDBL000008955	10		IDBL000009507	10

Table C-2. (continued).

Overpack	Container	IDC	Overpack	Container	IDC
	IDBL000009521	10		IDBL000010277	10
	IDBL000009528	10		IDBL000010280	10
	IDBL000009587	10		IDBL000010292	10
	IDBL000009590	10		IDBL000010309	10
	IDBL000009638	10		IDBL000010319	10
	IDBL000009640	10		IDBL000010332	10
	IDBL000009642	10		IDBL000010337	10
	IDBL000009644	10		IDBL000010350	10
	IDBL000009656	10		IDBL000010353	10
	IDBL000009658	10		IDBL000010411	10
	IDBL000009718	10		IDBL000010424	10
	IDBL000009725	10		IDBL000010441	10
	IDBL000009739	10		IDBL000010453	10
	IDBL000009743	10		IDBL000010466	10
	IDBL000009756	10		IDBL000010476	10
	IDBL000009793	10		IDBL000010488	10
	IDBL000009805	10		IDBL000010490	10
	IDBL000009877	10		IDBL000010496	10
	IDBL000009906	10		IDBL000010537	10
	IDBL000009909	10		IDBL000010539	10
	IDBL000009934	10		IDBL000010548	10
	IDBL000009937	10		IDBL000010571	10
	IDBL000009952	10		IDBL000010574	10
	IDBL000009965	10		IDBL000010576	10
	IDBL000009988	10		IDBL000010585	10
	IDBL000009992	10		IDBL000010586	10
	IDBL000010000	10		IDBL000010662	10
	IDBL000010011	10		IDBL000010665	10
	IDBL000010012	10		IDBL000010668	10
	IDBL000010027	10		IDBL000010669	10
	IDBL000010069	10		IDBL000010691	10
	IDBL000010080	10		IDBL000010693	10
	IDBL000010113	10		IDBL000010696	10
	IDBL000010121	10		IDBL000010698	10
	IDBL000010128	10		IDBL000010703	10
	IDBL000010171	10		IDBL000010716	10
	IDBL000010176	10		IDBL000010748	10
	IDBL000010195	10		IDBL000010779	10
	IDBL000010213	10		IDBL000010797	10

Table C-2. (continued).

Overpack	Container	IDC	Overpack	Container	IDC
	IDBL000010856	10		IDBL000011405	10
	IDBL000010922	10		IDBL000011425	10
	IDBL000010961	10		IDBL000011429	10
	IDBL000010963	10		IDBL000011430	10
	IDBL000010975	10		IDBL000011435	10
	IDBL000010979	10		IDBL000011437	10
	IDBL000010987	10		IDBL000011439	10
	IDBL000011008	10		IDBL000011454	10
	IDBL000011032	10		IDBL000011455	10
	IDBL000011034	10		IDBL000011477	10
	IDBL000011036	10		IDBL000011478	10
	IDBL000011047	10		IDBL000011482	10
	IDBL000011067	10		IDBL000011485	10
	IDBL000011074	10		IDBL000011486	10
	IDBL000011104	10		IDBL000011518	10
	IDBL000011111	10		IDBL000011520	10
	IDBL000011112	10		IDBL000011526	10
	IDBL000011146	10		IDBL000011548	10
	IDBL000011153	10		IDBL000011556	10
	IDBL000011158	10		IDBL000011581	10
	IDBL000011189	10		IDBL000011587	10
	IDBL000011192	10		IDBL000011588	10
	IDBL000011203	10		IDBL000011598	10
	IDBL000011227	10		IDBL000011623	10
	IDBL000011228	10		IDBL000011634	10
	IDBL000011252	10		IDBL000011641	10
	IDBL000011254	10		IDBL000011648	10
	IDBL000011261	10		IDBL000011651	10
	IDBL000011272	10		IDBL000011652	10
	IDBL000011288	10		IDBL000011655	10
	IDBL000011290	10		IDBL000011657	10
	IDBL000011307	10		IDBL000011659	10
	IDBL000011313	10		IDBL000011669	10
	IDBL000011329	10		IDBL000011681	10
	IDBL000011338	10		IDBL000011689	10
	IDBL000011339	10		IDBL000011696	10
	IDBL000011355	10		IDBL000011726	10
	IDBL000011367	10		IDBL000011737	10
	IDBL000011385	10		IDBL000011740	10

Table C-2. (continued).

Overpack	Container	IDC	Overpack	Container	IDC
	IDBL000011773	10		IDBL000012331	10
	IDBL000011809	10		IDBL000012333	10
	IDBL000011838	10		IDBL000012342	10
	IDBL000011846	10		IDBL000012348	10
	IDBL000011871	10		IDBL000012350	10
	IDBL000011890	10		IDBL000012352	10
	IDBL000011897	10		IDBL000012394	10
	IDBL000011901	10		IDBL000012400	10
	IDBL000011902	10		IDBL000012418	10
	IDBL000011918	10		IDBL000012427	10
	IDBL000011937	10		IDBL000012483	10
	IDBL000011956	10		IDBL000012511	10
	IDBL000011958	10		IDBL000012519	10
	IDBL000011963	10		IDBL000012521	10
	IDBL000011976	10		IDBL000012524	10
	IDBL000011996	10		IDBL000012545	10
	IDBL000012002	10		IDBL000012555	10
	IDBL000012010	10		IDBL000012574	10
	IDBL000012032	10		IDBL000012588	10
	IDBL000012036	10		IDBL000012590	10
	IDBL000012040	10		IDBL000012593	10
	IDBL000012054	10		IDBL000012595	10
	IDBL000012084	10		IDBL000012596	10
	IDBL000012087	10		IDBL000012622	10
	IDBL000012095	10		IDBL000012646	10
	IDBL000012100	10		IDBL000012647	10
	IDBL000012125	10		IDBL000012648	10
	IDBL000012138	10		IDBL000012660	10
	IDBL000012139	10		IDBL000012664	10
	IDBL000012149	10		IDBL000012669	10
	IDBL000012155	10		IDBL000012684	10
	IDBL000012159	10		IDBL000012686	10
	IDBL000012171	10		IDBL000012731	10
	IDBL000012176	10		IDBL000012736	10
	IDBL000012215	10		IDBL000012742	10
	IDBL000012231	10		IDBL000012746	10
	IDBL000012236	10		IDBL000012749	10
	IDBL000012277	10		IDBL000012751	10
	IDBL000012306	10		IDBL000012752	10

Table C-2. (continued).

Overpack	Container	IDC	Overpack	Container	IDC
	IDBL000012755	10		IDBL000012957	10
	IDBL000012767	10		IDBL000012958	10
	IDBL000012774	10		IDBL000012972	10
	IDBL000012780	10		IDBL000012973	10
	IDBL000012786	10		IDBL000012975	10
	IDBL000012789	10		IDBL000012977	10
	IDBL000012801	10		IDBL000012981	10
	IDBL000012803	10		IDBL000012985	10
	IDBL000012804	10		IDBL000012986	10
	IDBL000012807	10		IDBL00009054A	10
	IDBL000012820	10		IDBL00009057A	10
	IDBL000012823	10		IDBL00009941A	10
	IDBL000012824	10		IDBL5200	10
	IDBL000012827	10		IDBL5293	10
	IDBL000012831	10		IDBL5303	10
	IDBL000012840	10		IDBL5308	10
	IDBL000012852	10		IDBL5381	10
	IDBL000012853	10		IDBL5544	10
	IDBL000012860	10		IDBL6916	10
	IDBL000012861	10		IDBLM-1038	10
	IDBL000012866	10		IDBLM1155	10
	IDBL000012871	10		IDBLM1235	10
	IDBL000012879	10		IDBLM1365	10
	IDBL000012880	10		IDBLM1503	10
	IDBL000012889	10		IDBLM-1503	10
	IDBL000012892	10		IDBLM-1509	10
	IDBL000012894	10		IDBLM-1520	10
	IDBL000012899	10		IDBLM-1563	10
	IDBL000012900	10		IDBLM1572	10
	IDBL000012908	10		IDBLM1785	10
	IDBL000012909	10		IDBLM1790	10
	IDBL000012917	10		IDBLM1816	10
	IDBL000012924	10		IDBLM1834	10
	IDBL000012928	10		IDBLM1910	10
	IDBL000012936	10		IDBLM1956	10
	IDBL000012937	10		IDBLM1997	10
	IDBL000012939	10		IDBLM30	10
	IDBL000012951	10		IDBLM474	10
	IDBL000012956	10		IDBLM579	10

Table C-2. (continued).

Overpack	Container	IDC	Overpack	Container	IDC
	IDBLM7	10		IDBL000000832	20
	IDBLSO-182	10		IDBL000000837	20
	IDBLSO-211	10		IDBL000000862	20
	IDBLSO-219	10		IDBL000000912	20
	IDBL12694	12		IDBL000000967	20
	IDBLM1031	15		IDBL000001048	20
	IDBLM1043	15		IDBL000001059	20
	IDBLM1049	15		IDBL000001075	20
	IDBLM1054	15		IDBL000001088	20
	IDBL000000013	20		IDBL000001090	20
	IDBL000000048	20		IDBL000001109	20
	IDBL000000050	20		IDBL000001123	20
	IDBL000000099	20		IDBL000001131	20
	IDBL000000109	20		IDBL000001148	20
	IDBL000000110	20		IDBL000001150	20
	IDBL000000119	20		IDBL000001161	20
	IDBL000000128	20		IDBL000001171	20
	IDBL000000172	20		IDBL000001189	20
	IDBL000000180	20		IDBL000001195	20
	IDBL000000297	20		IDBL000001198	20
	IDBL000000314	20		IDBL000001202	20
	IDBL000000327	20		IDBL000001204	20
	IDBL000000340	20		IDBL000001221	20
	IDBL000000357	20		IDBL000001232	20
	IDBL000000387	20		IDBL000001236	20
	IDBL000000409	20		IDBL000001240	20
	IDBL000000486	20		IDBL000001248	20
	IDBL000000493	20		IDBL000001251	20
	IDBL000000543	20		IDBL000001259	20
	IDBL000000571	20		IDBL000001268	20
	IDBL000000598	20		IDBL000001272	20
	IDBL000000607	20		IDBL000001299	20
	IDBL000000677	20		IDBL000001307	20
	IDBL000000694	20		IDBL000001308	20
	IDBL000000706	20		IDBL000001312	20
	IDBL000000725	20		IDBL000001320	20
	IDBL000000731	20		IDBL000001332	20
	IDBL000000773	20		IDBL000001343	20
	IDBL000000830	20		IDBL000001352	20

Table C-2. (continued).

Overpack	Container	IDC	Overpack	Container	IDC
	IDBL000001361	20		IDBL000001701	20
	IDBL000001376	20		IDBL000001709	20
	IDBL000001399	20		IDBL000001730	20
	IDBL000001400	20		IDBL000001776	20
	IDBL000001402	20		IDBL000001797	20
	IDBL000001404	20		IDBL000001866	20
	IDBL000001418	20		IDBL000001893	20
	IDBL000001429	20		IDBL000001907	20
	IDBL000001430	20		IDBL000001924	20
	IDBL000001439	20		IDBL000001934	20
	IDBL000001440	20		IDBL000001975	20
	IDBL000001445	20		IDBL000001979	20
	IDBL000001451	20		IDBL000001991	20
	IDBL000001459	20		IDBL000001994	20
	IDBL000001468	20		IDBL000002176	20
	IDBL000001476	20		IDBL00000232M	20
	IDBL000001477	20		IDBL000002685	20
	IDBL000001478	20		IDBL000002695	20
	IDBL000001481	20		IDBL000002787	20
	IDBL000001494	20		IDBL000002816	20
	IDBL000001505	20		IDBL000002884	20
	IDBL000001510	20		IDBL000003005	20
	IDBL000001513	20		IDBL000003020	20
	IDBL000001527	20		IDBL000003022	20
	IDBL000001531	20		IDBL000003025	20
	IDBL000001535	20		IDBL000003035	20
	IDBL000001538	20		IDBL000003040	20
	IDBL000001547	20		IDBL000003063	20
	IDBL000001559	20		IDBL000003074	20
	IDBL000001596	20		IDBL000003083	20
	IDBL000001597	20		IDBL000003088	20
	IDBL000001599	20		IDBL000003100	20
	IDBL000001603	20		IDBL000003102	20
	IDBL000001604	20		IDBL000003121	20
	IDBL000001608	20		IDBL000003135	20
	IDBL000001640	20		IDBL000003143	20
	IDBL000001651	20		IDBL000003145	20
	IDBL00000167M	20		IDBL000003159	20
	IDBL000001684	20		IDBL000003163	20

Table C-2. (continued).

Overpack	Container	IDC	Overpack	Container	IDC
	IDBL000003172	20		IDBL000003523	20
	IDBL000003187	20		IDBL000003536	20
	IDBL000003197	20		IDBL000003552	20
	IDBL000003201	20		IDBL000003555	20
	IDBL000003225	20		IDBL000003556	20
	IDBL000003274	20		IDBL000003559	20
	IDBL000003277	20		IDBL000003561	20
	IDBL000003290	20		IDBL000003562	20
	IDBL000003299	20		IDBL000003564	20
	IDBL000003310	20		IDBL000003565	20
	IDBL000003322	20		IDBL000003566	20
	IDBL000003342	20		IDBL000003567	20
	IDBL000003343	20		IDBL000003570	20
	IDBL000003346	20		IDBL000003587	20
	IDBL000003361	20		IDBL000003591	20
	IDBL000003364	20		IDBL000003593	20
	IDBL000003402	20		IDBL000003601	20
	IDBL000003403	20		IDBL000003610	20
	IDBL000003404	20		IDBL000003612	20
	IDBL000003407	20		IDBL000003618	20
	IDBL000003408	20		IDBL000003636	20
	IDBL000003411	20		IDBL000003637	20
	IDBL000003420	20		IDBL000003681	20
	IDBL000003425	20		IDBL000003686	20
	IDBL000003429	20		IDBL000003730	20
	IDBL000003438	20		IDBL000003771	20
	IDBL000003439	20		IDBL000003816	20
	IDBL000003440	20		IDBL000003823	20
	IDBL000003449	20		IDBL000003848	20
	IDBL000003453	20		IDBL000003884	20
	IDBL000003465	20		IDBL000003887	20
	IDBL000003472	20		IDBL000003898	20
	IDBL000003475	20		IDBL000003900	20
	IDBL000003485	20		IDBL000003901	20
	IDBL000003486	20		IDBL000003940	20
	IDBL000003498	20		IDBL000003968	20
	IDBL000003504	20		IDBL000004059	20
	IDBL000003507	20		IDBL000004620	20
	IDBL000003522	20		IDBL000004627	20

Table C-2. (continued).

Overpack	Container	IDC	Overpack	Container	IDC
	IDBL000004705	20		IDBL000005465	20
	IDBL000004776	20		IDBL000005472	20
	IDBL000004804	20		IDBL000005487	20
	IDBL000004811	20		IDBL000005512	20
	IDBL000004967	20		IDBL000005531	20
	IDBL000005023	20		IDBL000005535	20
	IDBL000005028	20		IDBL000005537	20
	IDBL000005037	20		IDBL000005544	20
	IDBL000005046	20		IDBL000005548	20
	IDBL000005059	20		IDBL000005561	20
	IDBL000005062	20		IDBL000005587	20
	IDBL000005068	20		IDBL000005592	20
	IDBL000005074	20		IDBL000005602	20
	IDBL000005085	20		IDBL000005653	20
	IDBL000005086	20		IDBL000005668	20
	IDBL000005087	20		IDBL000005710	20
	IDBL000005095	20		IDBL000005733	20
	IDBL000005150	20		IDBL000005741	20
	IDBL000005173	20		IDBL000005806	20
	IDBL000005179	20		IDBL000005830	20
	IDBL000005182	20		IDBL000005862	20
	IDBL000005183	20		IDBL000005893	20
	IDBL000005200	20		IDBL000005899	20
	IDBL000005226	20		IDBL000005903	20
	IDBL000005244	20		IDBL000005924	20
	IDBL000005251	20		IDBL000005941	20
	IDBL000005261	20		IDBL000005966	20
	IDBL000005272	20		IDBL000005968	20
	IDBL000005293	20		IDBL000006016	20
	IDBL000005337	20		IDBL000006026	20
	IDBL000005343	20		IDBL000006067	20
	IDBL000005363	20		IDBL000006074	20
	IDBL000005364	20		IDBL000006099	20
	IDBL000005365	20		IDBL000006115	20
	IDBL000005368	20		IDBL000006170	20
	IDBL000005384	20		IDBL000006184	20
	IDBL000005395	20		IDBL000006227	20
	IDBL000005426	20		IDBL000006244	20
	IDBL000005453	20		IDBL000006254	20

Table C-2. (continued).

Overpack	Container	IDC	Overpack	Container	IDC
	IDBL000006260	20		IDBL000007370	20
	IDBL000006263	20		IDBL000007408	20
	IDBL000006336	20		IDBL000007447	20
	IDBL000006354	20		IDBL000007457	20
	IDBL000006390	20		IDBL000007465	20
	IDBL000006397	20		IDBL000007484	20
	IDBL000006415	20		IDBL000007499	20
	IDBL000006475	20		IDBL000007508	20
	IDBL000006513	20		IDBL000007513	20
	IDBL000006533	20		IDBL000007535	20
	IDBL000006562	20		IDBL000007541	20
	IDBL000006626	20		IDBL000007549	20
	IDBL000006799	20		IDBL000007554	20
	IDBL000006849	20		IDBL000007558	20
	IDBL000006907	20		IDBL000007584	20
	IDBL000006909	20		IDBL000007607	20
	IDBL000006969	20		IDBL000007622	20
	IDBL000006985	20		IDBL000007626	20
	IDBL000007001	20		IDBL000007641	20
	IDBL000007002	20		IDBL000007643	20
	IDBL000007038	20		IDBL000007657	20
	IDBL000007041	20		IDBL000007659	20
	IDBL000007045	20		IDBL000007678	20
	IDBL000007060	20		IDBL000007706	20
	IDBL000007066	20		IDBL000007753	20
	IDBL000007139	20		IDBL000007765	20
	IDBL000007145	20		IDBL000007823	20
	IDBL000007202	20		IDBL000007827	20
	IDBL000007205	20		IDBL000007833	20
	IDBL000007206	20		IDBL000007863	20
	IDBL000007212	20		IDBL000007900	20
	IDBL000007257	20		IDBL000007930	20
	IDBL000007272	20		IDBL000007938	20
	IDBL000007280	20		IDBL000007945	20
	IDBL000007296	20		IDBL000007962	20
	IDBL000007300	20		IDBL000007990	20
	IDBL000007326	20		IDBL000008007	20
	IDBL000007341	20		IDBL000008009	20
	IDBL000007346	20		IDBL000008041	20

Table C-2. (continued).

Overpack	Container	IDC	Overpack	Container	IDC
	IDBL000008067	20		IDBL000008800	20
	IDBL000008082	20		IDBL000008898	20
	IDBL000008094	20		IDBL000008909	20
	IDBL000008106	20		IDBL000008979	20
	IDBL000008124	20		IDBL000008982	20
	IDBL000008168	20		IDBL000008999	20
	IDBL000008177	20		IDBL000009013	20
	IDBL000008179	20		IDBL000009015	20
	IDBL000008194	20		IDBL000009019	20
	IDBL000008244	20		IDBL000009027	20
	IDBL000008265	20		IDBL000009054	20
	IDBL000008302	20		IDBL000009107	20
	IDBL000008339	20		IDBL000009109	20
	IDBL000008342	20		IDBL000009151	20
	IDBL000008359	20		IDBL000009183	20
	IDBL000008360	20		IDBL000009188	20
	IDBL000008405	20		IDBL000009258	20
	IDBL000008407	20		IDBL000009309	20
	IDBL000008416	20		IDBL000009319	20
	IDBL000008418	20		IDBL000009335	20
	IDBL000008422	20		IDBL000009391	20
	IDBL000008517	20		IDBL000009529	20
	IDBL000008519	20		IDBL000009551	20
	IDBL000008524	20		IDBL000009566	20
	IDBL000008564	20		IDBL000009576	20
	IDBL000008593	20		IDBL000009588	20
	IDBL000008622	20		IDBL000009597	20
	IDBL000008625	20		IDBL000009671	20
	IDBL000008628	20		IDBL000009717	20
	IDBL000008649	20		IDBL000009733	20
	IDBL000008677	20		IDBL000009748	20
	IDBL000008684	20		IDBL000009752	20
	IDBL000008710	20		IDBL000009755	20
	IDBL000008733	20		IDBL000009759	20
	IDBL000008772	20		IDBL000009760	20
	IDBL000008775	20		IDBL000009765	20
	IDBL000008778	20		IDBL000009766	20
	IDBL000008781	20		IDBL000009767	20
	IDBL000008798	20		IDBL000009783	20

Table C-2. (continued).

Overpack	Container	IDC	Overpack	Container	IDC
	IDBL000009785	20		IDBL000010261	20
	IDBL000009791	20		IDBL000010270	20
	IDBL000009798	20		IDBL000010274	20
	IDBL000009800	20		IDBL000010276	20
	IDBL000009804	20		IDBL000010289	20
	IDBL000009853	20		IDBL000010299	20
	IDBL000009895	20		IDBL000010341	20
	IDBL000009907	20		IDBL000010368	20
	IDBL000009927	20		IDBL000010374	20
	IDBL000009933	20		IDBL000010421	20
	IDBL000009939	20		IDBL000010429	20
	IDBL000009941	20		IDBL000010451	20
	IDBL000009949	20		IDBL000010477	20
	IDBL000009954	20		IDBL00001049M	20
	IDBL000009956	20		IDBL000010500	20
	IDBL000009959	20		IDBL000010513	20
	IDBL000009960	20		IDBL000010540	20
	IDBL000009963	20		IDBL000010552	20
	IDBL000009969	20		IDBL000010609	20
	IDBL000010002	20		IDBL000010611	20
	IDBL000010006	20		IDBL000010621	20
	IDBL000010021	20		IDBL000010641	20
	IDBL000010039	20		IDBL000010648	20
	IDBL000010047	20		IDBL000010659	20
	IDBL000010053	20		IDBL000010660	20
	IDBL000010074	20		IDBL000010663	20
	IDBL000010087	20		IDBL000010674	20
	IDBL000010138	20		IDBL000010680	20
	IDBL000010143	20		IDBL000010682	20
	IDBL000010152	20		IDBL000010686	20
	IDBL000010163	20		IDBL000010694	20
	IDBL000010165	20		IDBL000010705	20
	IDBL000010170	20		IDBL000010718	20
	IDBL000010182	20		IDBL000010743	20
	IDBL000010187	20		IDBL000010759	20
	IDBL000010202	20		IDBL000010767	20
	IDBL000010212	20		IDBL000010773	20
	IDBL000010221	20		IDBL000010775	20
	IDBL000010226	20		IDBL000010780	20

Table C-2. (continued).

Overpack	Container	IDC	Overpack	Container	IDC
	IDBL000010789	20		IDBL000011163	20
	IDBL000010808	20		IDBL000011165	20
	IDBL000010809	20		IDBL000011171	20
	IDBL000010810	20		IDBL000011173	20
	IDBL000010833	20		IDBL000011183	20
	IDBL000010855	20		IDBL000011185	20
	IDBL000010859	20		IDBL000011186	20
	IDBL000010882	20		IDBL000011197	20
	IDBL000010889	20		IDBL000011198	20
	IDBL000010895	20		IDBL000011199	20
	IDBL000010897	20		IDBL000011201	20
	IDBL000010899	20		IDBL000011204	20
	IDBL000010910	20		IDBL000011209	20
	IDBL000010914	20		IDBL000011210	20
	IDBL000010929	20		IDBL000011215	20
	IDBL000010968	20		IDBL000011219	20
	IDBL000010971	20		IDBL000011221	20
	IDBL000010990	20		IDBL000011230	20
	IDBL000011005	20		IDBL000011239	20
	IDBL000011007	20		IDBL000011249	20
	IDBL000011016	20		IDBL000011258	20
	IDBL000011023	20		IDBL000011259	20
	IDBL000011028	20		IDBL000011264	20
	IDBL000011035	20		IDBL000011265	20
	IDBL000011043	20		IDBL000011269	20
	IDBL000011049	20		IDBL000011299	20
	IDBL000011062	20		IDBL000011306	20
	IDBL000011075	20		IDBL000011312	20
	IDBL000011078	20		IDBL000011331	20
	IDBL000011105	20		IDBL000011337	20
	IDBL000011113	20		IDBL000011348	20
	IDBL000011125	20		IDBL000011359	20
	IDBL000011133	20		IDBL000011360	20
	IDBL000011134	20		IDBL000011368	20
	IDBL000011137	20		IDBL000011375	20
	IDBL000011140	20		IDBL000011377	20
	IDBL000011143	20		IDBL000011379	20
	IDBL000011145	20		IDBL000011401	20
	IDBL000011152	20		IDBL000011402	20

Table C-2. (continued).

Overpack	Container	IDC	Overpack	Container	IDC
	IDBL000011407	20		IDBL000012075	20
	IDBL000011410	20		IDBL000012089	20
	IDBL000011417	20		IDBL000012096	20
	IDBL000011419	20		IDBL000012109	20
	IDBL000011424	20		IDBL000012113	20
	IDBL000011438	20		IDBL000012117	20
	IDBL000011448	20		IDBL000012129	20
	IDBL000011453	20		IDBL000012150	20
	IDBL00001145A	20		IDBL000012165	20
	IDBL000011469	20		IDBL000012168	20
	IDBL000011505	20		IDBL000012183	20
	IDBL000011507	20		IDBL000012184	20
	IDBL000011508	20		IDBL000012199	20
	IDBL000011525	20		IDBL000012211	20
	IDBL000011538	20		IDBL000012212	20
	IDBL000011546	20		IDBL000012216	20
	IDBL000011550	20		IDBL000012220	20
	IDBL000011563	20		IDBL000012222	20
	IDBL000011566	20		IDBL000012228	20
	IDBL000011619	20		IDBL000012232	20
	IDBL000011658	20		IDBL000012233	20
	IDBL000011690	20		IDBL000012234	20
	IDBL000011694	20		IDBL000012239	20
	IDBL000011715	20		IDBL000012242	20
	IDBL000011718	20		IDBL000012245	20
	IDBL000011749	20		IDBL000012246	20
	IDBL000011780	20		IDBL000012252	20
	IDBL000011787	20		IDBL000012256	20
	IDBL000011817	20		IDBL000012261	20
	IDBL000011828	20		IDBL000012263	20
	IDBL000011844	20		IDBL000012276	20
	IDBL000011914	20		IDBL000012279	20
	IDBL000011924	20		IDBL000012286	20
	IDBL000012006	20		IDBL000012291	20
	IDBL000012014	20		IDBL000012296	20
	IDBL000012055	20		IDBL000012320	20
	IDBL000012062	20		IDBL000012322	20
	IDBL000012071	20		IDBL000012323	20
	IDBL000012073	20		IDBL000012328	20

Table C-2. (continued).

Overpack	Container	IDC	Overpack	Container	IDC
	IDBL000012335	20		IDBL000012723	20
	IDBL000012341	20		IDBL000012743	20
	IDBL000012344	20		IDBL000012745	20
	IDBL000012353	20		IDBL000012769	20
	IDBL000012355	20		IDBL000012773	20
	IDBL000012377	20		IDBL000012785	20
	IDBL000012397	20		IDBL000012796	20
	IDBL000012411	20		IDBL000012797	20
	IDBL000012437	20		IDBL000012798	20
	IDBL000012446	20		IDBL000012812	20
	IDBL000012447	20		IDBL000012814	20
	IDBL000012472	20		IDBL000012818	20
	IDBL000012485	20		IDBL000012828	20
	IDBL000012491	20		IDBL000012837	20
	IDBL000012517	20		IDBL000012838	20
	IDBL000012528	20		IDBL000012851	20
	IDBL000012537	20		IDBL000012857	20
	IDBL000012538	20		IDBL000012864	20
	IDBL000012539	20		IDBL000012867	20
	IDBL000012551	20		IDBL000012874	20
	IDBL000012563	20		IDBL000012875	20
	IDBL000012566	20		IDBL000012877	20
	IDBL000012571	20		IDBL000012886	20
	IDBL000012576	20		IDBL000012898	20
	IDBL000012612	20		IDBL000012904	20
	IDBL000012615	20		IDBL000012910	20
	IDBL000012619	20		IDBL000012918	20
	IDBL000012623	20		IDBL000012926	20
	IDBL000012628	20		IDBL000012930	20
	IDBL000012634	20		IDBL000012931	20
	IDBL000012637	20		IDBL000012933	20
	IDBL000012639	20		IDBL000012949	20
	IDBL000012643	20		IDBL000012953	20
	IDBL000012662	20		IDBL000012960	20
	IDBL000012668	20		IDBL000012968	20
	IDBL000012671	20		IDBL000012983	20
	IDBL000012711	20		IDBL000012988	20
	IDBL000012713	20		IDBL000012990	20
	IDBL000012719	20		IDBL00007396A	20

Table C-2. (continued).

Overpack	Container	IDC	Overpack	Container	IDC
	IDBL00008300A	20		IDBL00000063M	30
	IDBL00011227A	20		IDBL00000064M	30
	IDBL00011505A	20		IDBL00000067M	30
	IDBL5253	20		IDBL00000068M	30
	IDBL5397	20		IDBL00000074M	30
	IDBL6731	20		IDBL00000077M	30
	IDBLS0046M	20		IDBL00000079M	30
	IDBLS0049M	20		IDBL00000082M	30
	IDBLS0057M	20		IDBL00000085M	30
	IDBLS0078M	20		IDBL00000093M	30
	IDBLS0081M	20		IDBL00000095M	30
	IDBLS0092M	20		IDBL00000098M	30
	IDBLS0099M	20		IDBL00000100M	30
	IDBLS0116M	20		IDBL00000108M	30
	IDBLS0132M	20		IDBL00000111M	30
	IDBLS0134M	20		IDBL00000112M	30
	IDBLS0156M	20		IDBL00000114M	30
	IDBLS0169M	20		IDBL00000120M	30
	IDBLS0194M	20		IDBL00000123M	30
	IDBLS0234M	20		IDBL00000254M	30
	IDBLS0292M	20		IDBL00000297M	30
	IDBLS0305M	20		IDBL00000360M	30
	IDBLS0307M	20		IDBL00000363M	30
	IDBL00000001M	30		IDBL00000384M	30
	IDBL00000011M	30		IDBL00000397M	30
	IDBL00000012M	30		IDBL00000423M	30
	IDBL00000013M	30		IDBLANL-88107	30
	IDBL00000014M	30		IDBLANL-88164	30
	IDBL00000018M	30		IDBLM1487	30
	IDBL00000020M	30		IDBLS0073M	30
	IDBL00000025M	30		IDBLS0177M	30
	IDBL00000027M	30		IDBL00000075M	40
	IDBL00000028M	30		IDBL00000096M	40
	IDBL00000042M	30		IDBL00000104M	40
	IDBL00000054M	30		IDBL00000249M	40
	IDBL00000056M	30		IDBL00000274M	40
	IDBL00000058M	30		IDBL00000289M	40
	IDBL00000061M	30		IDBL00000291M	40
	IDBL00000062M	30		IDBL00000298M	40

Table C-2. (continued).

Overpack	Container	IDC	Overpack	Container	IDC
	IDBL000003156	40		IDBLE122M	40
	IDBL000003169	40		IDBLE201M	40
	IDBL00000332M	40		IDBLE202M	40
	IDBL00000336M	40		IDBLE203M	40
	IDBL00000338M	40		IDBLE204M	40
	IDBL00000348M	40		IDBLE205M	40
	IDBL00000351M	40		IDBLE206M	40
	IDBL00000353M	40		IDBLE207M	40
	IDBL00000358M	40		IDBLE208M	40
	IDBL00000378M	40		IDBLE209M	40
	IDBL00000383M	40		IDBLE210M	40
	IDBL00000389M	40		IDBLE211M	40
	IDBL00000415M	40		IDBLE212M	40
	IDBL00000418M	40		IDBLE213M	40
	IDBL00000420M	40		IDBLE214M	40
	IDBL000006569	40		IDBLE215M	40
	IDBL000006675	40		IDBLE216M	40
	IDBL000012387	40		IDBLE217M	40
	IDBLE101M	40		IDBLE218M	40
	IDBLE102M	40		IDBLE219M	40
	IDBLE103M	40		IDBLE220M	40
	IDBLE104M	40		IDBLE221M	40
	IDBLE105M	40		IDBLE222M	40
	IDBLE106M	40		IDBLE223M	40
	IDBLE107M	40		IDBLE224M	40
	IDBLE108M	40		IDBLE225M	40
	IDBLE109M	40		IDBLE226M	40
	IDBLE110M	40		IDBLE227M	40
	IDBLE111M	40		IDBLE228M	40
	IDBLE112M	40		IDBLE229M	40
	IDBLE113M	40		IDBLE230M	40
	IDBLE114M	40		IDBLE231M	40
	IDBLE115M	40		IDBLE232M	40
	IDBLE116M	40		IDBLE233M	40
	IDBLE117M	40		IDBLE234M	40
	IDBLE118M	40	IDBLOPU233002	IDBLE301M	40
	IDBLE119M	40	IDBLOPU233001	IDBLE302M	40
	IDBLE120M	40	IDBLOPU233001	IDBLE303M	40
	IDBLE121M	40	IDBLOPU233001	IDBLE304M	40

Table C-2. (continued).

Overpack	Container	IDC	Overpack	Container	IDC
IDBLOPU233001	IDBLE306M	40	IDBLOPU233010	IDBLE432M	40
IDBLOPU233002	IDBLE307M	40	IDBLOPU233003	IDBLE433M	40
IDBLOPU233002	IDBLE308M	40	IDBLOPU233009	IDBLE434M	40
IDBLOPU233002	IDBLE308M	40	IDBLOPU233004	IDBLE435M	40
IDBLOPU233001	IDBLE309M	40	IDBLOPU233005	IDBLE436M	40
IDBLOPU233002	IDBLE310M	40	IDBLOPU233004	IDBLE437M	40
IDBLOPU233002	IDBLE311M	40	IDBLOPU233011	IDBLE438M	40
IDBLOPU233002	IDBLE312M	40	IDBLOPU233003	IDBLE439M	40
IDBLOPU233004	IDBLE401M	40	IDBLOPU233010	IDBLE440M	40
	IDBLE402M	40	IDBLOPU233011	IDBLE441M	40
	IDBLE403M	40	IDBLOPU233007	IDBLE442M	40
IDBLOPU233008	IDBLE404M	40	IDBLOPU233005	IDBLE443M	40
	IDBLE405M	40	IDBLOPU233007	IDBLE444M	40
	IDBLE406M	40	IDBLOPU233010	IDBLE445M	40
	IDBLE407M	40	IDBLOPU233005	IDBLE446M	40
	IDBLE408M	40	IDBLOPU233009	IDBLE447M	40
	IDBLE409M	40	IDBLOPU233004	IDBLE448M	40
	IDBLE410M	40	IDBLOPU233010	IDBLE449M	40
	IDBLE411M	40	IDBLOPU233008	IDBLE450M	40
	IDBLE412M	40	IDBLOPU233006	IDBLE451M	40
	IDBLE413M	40	IDBLOPU233008	IDBLE452M	40
	IDBLE414M	40	IDBLOPU233011	IDBLE453M	40
IDBLOPU233004	IDBLE415M	40	IDBLOPU233008	IDBLE454M	40
	IDBLE416M	40	IDBLOPU233009	IDBLE455M	40
	IDBLE417M	40	IDBLOPU233007	IDBLE456M	40
	IDBLE418M	40		IDBLE457M	40
	IDBLE419M	40	IDBLOPU233006	IDBLE458M	40
IDBLOPU233004	IDBLE420M	40	IDBLOPU233011	IDBLE459M	40
	IDBLE421M	40	IDBLOPU233011	IDBLE460M	40
IDBLOPU233005	IDBLE422M	40	IDBLOPU233007	IDBLE461M	40
	IDBLE423M	40	IDBLOPU233003	IDBLE462M	40
	IDBLE424M	40	IDBLOPU233006	IDBLE463M	40
	IDBLE425M	40		IDBLE464M	40
IDBLOPU233008	IDBLE426M	40	IDBLOPU233003	IDBLE465M	40
IDBLOPU233007	IDBLE427M	40	IDBLOPU233010	IDBLE466M	40
	IDBLE428M	40	IDBLOPU233009	IDBLE467M	40
IDBLOPU233008	IDBLE429M	40	IDBLOPU233005	IDBLE468M	40
IDBLOPU233003	IDBLE430M	40	IDBLOPU233009	IDBLE469M	40
IDBLOPU233003	IDBLE431M	40	IDBLOPU233007	IDBLE470M	40

Table C-2. (continued).

Overpack	Container	IDC	Overpack	Container	IDC
IDBLOPU233005	IDBLE471M	40		IDBL1360	81
IDBLOPU233006	IDBLE472M	40		IDBL1361	81
IDBLOPU233006	IDBLE473M	40		IDBL1362	81
IDBLOPU233010	IDBLE474M	40		IDBL1368	81
IDBLOPU233006	IDBLE475M	40		IDBL1429	81
	IDBLE476M	40		IDBL1742	81
IDBLOPU233009	IDBLE477M	40		IDBL1743	81
	IDBLS0034M	40		IDBL1753	81
	IDBL12500	50		IDBL1754	81
	IDBL1351	81		IDBL1755	81
	IDBL1357	81		IDBL1756	81
	IDBL1358	81		IDBL1759	81
	IDBL1359	81		IDBL1766	81

This page is intentionally left blank.

Appendix D

Naval Reactor Facility

This page is intentionally left blank.

Appendix D

Naval Reactor Facility

Table D-1. Naval Reactor Facility remote handled transuranic waste.

Drum	TRIPS Database	RWMIS Database	Container Type	IDC	Form 135	Form 137	Disposition Date	Shipment	ILTSF Location[a]	Contact Dose Rate[b] mR/hr	Comments
ECO100001	Y	Y	30-gal	153	Y	N	10/27/77	77-150-E	B14-4	1800	Name from vault record. Transferred to C12 &B14 9-26-81.
ECO100002	Y	Y	30-gal	153	Y	N	10/28/77	77-151-E	B14-3	2000	Name from vault record. Transferred to C12 & B14 9-26-81.
ECO100003	Y	Y	30-gal	153	Y	N	10/31/77	77-152-E	B14-2	7000	Name from vault record. Transferred to C12 & B14 9-26-81.
ECO300001	Y	Y	30-gal	153	Y	N	11/02/77	77-155-E	B14-1	5000	Name from vault record. Transferred to C12 & B14 9-26-81.
ECO300002	Y	Y	30-gal	153	Y	N	11/03/77	77-156-E	C12-5	10000	Name from vault record. Transferred to C12 & B14 9-26-81.
ECO300004	Y	Y	30-gal	153	Y	N	11/04/77	77-157-E	A14-1	40000	
ECO100004	Y	Y	30-gal	153	N	N	02/01/78	78-005-E	A14-2	10000	
ECO200001	Y	Y	30-gal	153	N	N	02/03/78	78-007-E	A14-3	50000	Vault record only.
ECO300003	Y	Y	30-gal	153	N	N	02/03/78	78-008-E	A14-4	25000	Vault record only.
ECO300005	Y	Y	30-gal	153	Y	N	01/03/79	79-001-E	B10-1	15000	Name from vault record.
ECO300006	Y	Y	30-gal	153	Y	N	01/04/79	79-002-E	B10-2	20000	Name from vault record.
ECO100005	Y	Y	30-gal	153	Y	N	01/23/79	79-007-E	B10-3	30000	Name from vault record.
ECO100006	Y	Y	30-gal	153	Y	N	03/05/79	79-019-E	B1-1	4000	
ECO100007	Y	Y	30-gal	153	Y	N	03/05/79	79-020-E	B1-2	18000	
ECO100008	Y	Y	30-gal	153	Y	N	03/06/79	79-021-E	B1-3	37000	
ECO200004	Y	Y	30-gal	153	Y	N	03/07/79	79-023-E	B1-5	3000	
ECO200005	Y	Y	30-gal	153	Y	N	03/07/79	79-022-E	B1-4	16000	
ECO100009	Y	Y	30-gal	153	N	Y	03/08/79	79-024-E	C1-1	7000	
ECO100010	Y	Y	30-gal	153	Y	Y	03/09/79	79-025-E	C1-2	1300	
ECO200007	Y	Y	30-gal	153	Y	Y	03/09/79	79-026-E	C1-3	3000	
ECO100011	Y	Y	30-gal	153	Y	Y	03/12/79	79-028-E	C1-4	2000	
ECO200006	Y	Y	30-gal	153	Y	Y	03/12/79	79-027-E	C1-5	28000	
ECO100012	Y	Y	30-gal	153	Y	N	03/13/79	79-030-E	B10-4	2000	
ECO200009	Y	Y	30-gal	153	Y	Y	03/13/79	79-029-E	B10-5	8500	
ECO200008	Y	Y	30-gal	153	Y	Y	03/14/79	79-031-E	B13-1	3000	
ECO100013	N	Y	30-gal	153[a]	N	N	04/13/81	81-021-E	A15-1	0	Vault record only.

Table D-1. (continued).

Drum	TRIPS Database	RWMIS Database	Container Type	IDC	Form 135	Form 137	Disposition Date	Shipment	ILTSF Location[a]	Contact Dose Rate[b] mR/hr	Comments
ECO300007	N	Y	30-gal	153[a]	N	N	04/13/81	81-021-E	A15-2	0	Vault record only.

a) Actual storage location maybe different.
b) Contact dose rate at the time of packaging.

Appendix E

Test Reactor Area

This page is intentionally left blank.

Appendix E

Test Reactor Area

Table E-1. Test Reactor Area remote handled transuranic waste.

DRUM_ID	TRIPS	RWMIS	Container Type	IDC	Other	Disposition Date	Shipment	Storage Location[a]	Contact Dose Rate[b] mR/hr	Comments
TRA-88-11	Y	Y	55-gal	150	Y	01/11/1990	90001	WMF-628	3000	WCR approval.
TRA-88-12	Y	Y	55-gal	150	Y	01/11/1990	90001	WMF-628	2400	WCR approval.
TRA-88-13	Y	Y	55-gal	150	Y	01/11/1990	90001	WMF-628	1500	WCR approval.
TRA-88-21	Y	Y	55-gal	150	Y	01/11/1990	90001	WMF-628	5000	WCR approval.
TRA-88-22	Y	Y	55-gal	150	Y	01/11/1990	90001	WMF-628	3700	WCR approval.
TRA-88-31	Y	Y	55-gal	150	Y	01/11/1990	90001	WMF-628	900	WCR approval.
TRA-88-32	Y	Y	55-gal	150	Y	01/11/1990	90001	WMF-628	800	WCR approval.
TRA-88-41	Y	Y	55-gal	150	Y	01/11/1990	90001	WMF-628	4800	WCR approval.
TRA-88-42	Y	Y	55-gal	150	Y	01/11/1990	90001	WMF-628	4300	WCR approval.
TRA-88-43	Y	Y	55-gal	150	Y	01/11/1990	90001	WMF-628	4000	WCR approval.
TRA/TRU-1	N	Y	55-gal	157	Y	08/31/1994	94013	A47-3	320	WCR approval.
TRA/TRU-10	N	Y	55-gal	157	Y	08/31/1994	94013	C46-2	400	WCR approval.
TRA/TRU-11	N	Y	55-gal	157	Y	08/31/1994	94013	C46-1	380	WCR approval.
TRA/TRU-12	N	Y	55-gal	157	Y	08/31/1994	94013	B46-2	350	WCR approval.
TRA/TRU-13	N	Y	55-gal	157	Y	08/31/1994	94013	B46-3	380	WCR approval.
TRA/TRU-14	N	Y	55-gal	157	Y	08/31/1994	94013	B46-4	200	WCR approval.
TRA/TRU-2	N	Y	55-gal	157	Y	08/31/1994	94013	A46-2	420	WCR approval.
TRA/TRU-3	N	Y	55-gal	157	Y	08/31/1994	94013	A46-3	380	WCR approval.
TRA/TRU-4	N	Y	55-gal	157	Y	08/31/1994	94013	C46-3	420	WCR approval.
TRA/TRU-5	N	Y	55-gal	157	Y	08/31/1994	94013	C46-4	300	WCR approval.
TRA/TRU-6	N	Y	55-gal	157	Y	08/31/1994	94013	A46-4	400	WCR approval.
TRA/TRU-7	N	Y	55-gal	157	Y	08/31/1994	94013	A47-4	380	WCR approval.
TRA/TRU-8	N	Y	55-gal	157	Y	08/31/1994	94013	A46-1	400	WCR approval.
TRA/TRU-9	N	Y	55-gal	157	Y	08/31/1994	94013	B46-1	400	WCR approval.
ARMF0001	Y	N	55-gal	157	N	08/01/1996	SD000975	C44-3	500	Vault record only.

a) Actual storage location maybe different.
b) Contact dose rate at the time of disposal.

This page is intentionally left blank.

Appendix F

Idaho Nuclear Technology and Engineering Center

This page is intentionally left blank.

Appendix F

Idaho Nuclear Technology and Engineering Center

Table F-1. Idaho Nuclear Technology and Engineering Center remote handled transuranic waste.

Drum	TRIPS	RWMIS	Container Type	IDC	Form 135	Disposition Date	Shipment	ILTSF Location[a]	Contact Dose Rate[b] mR/hr	Comments
427	Y	Y	30-gal	151	Y	10/13/1978	2271-01	A17-11	30000	
460	Y	Y	30-gal	151	Y	10/13/1978	2271-01	B15-11	30000	

a) Actual storage location maybe different.
b) Contact dose rate at the time of disposal.

This page is intentionally left blank.

Appendix G

"Suspect" Remote Handled Transuranic Waste

This page is intentionally left blank.

Appendix G

"Suspect" Remote Handled Transuranic Waste

Table G-1. Rocky Flats Environmental Technology Site "suspect" remote handled transuranic lead shielded containers except for the projected inventory.

Container	IDC	Container	IDC	Container	IDC	Container	IDC
IDRF002500485	1	IDRF741203471	1	IDRF000100585	241	IDRF000100715	241
IDRF002500486	1	IDRF741203472	1	IDRF000100586	241	IDRF000100716	241
IDRF074112859	1	IDRF741203507	1	IDRF000100587	241	IDRF000100718	241
IDRF741201725	1	IDRF741203508	1	IDRF000100588	241	IDRF000100719	241
IDRF741201726	1	IDRF741204010	1	IDRF000100589	241	IDRF000100721	241
IDRF741201727	1	IDRF741204090	1	IDRF000100602	241	IDRF000100722	241
IDRF741201728	1	IDRF741204091	1	IDRF000100647	241	IDRF000100723	241
IDRF741201729	1	IDRF741204111	1	IDRF000100649	241	IDRF000100724	241
IDRF741201730	1	IDRF741204117	1	IDRF000100650	241	IDRF000100727	241
IDRF741201731	1	IDRF741204118	1	IDRF000100651	241	IDRF000100728	241
IDRF741201732	1	IDRF741204305	1	IDRF000100652	241	IDRF000100729	241
IDRF741201733	1	IDRF741204380	1	IDRF000100653	241	IDRF000100730	241
IDRF741201734	1	IDRF741204656	1	IDRF000100660	241	IDRF000100731	241
IDRF741201735	1	IDRF741204670	1	IDRF000100661	241	IDRF000100732	241
IDRF741201736	1	IDRF741204673	1	IDRF000100662	241	IDRF000100733	241
IDRF741201737	1	IDRF741204806	1	IDRF000100663	241	IDRF000100734	241
IDRF741201738	1	IDRF741204862	1	IDRF000100664	241	IDRF000100735	241
IDRF741201739	1	IDRF741205075	1	IDRF000100670	241	IDRF000100736	241
IDRF741201970	1	IDRF741205100	1	IDRF000100671	241	IDRF000100737	241
IDRF741201971	1	IDRF741205162	1	IDRF000100672	241	IDRF000100743	241
IDRF741201972	1	IDRF741205381	1	IDRF000100677	241	IDRF000100744	241
IDRF741201973	1	IDRF741205432	1	IDRF000100690	241	IDRF000100745	241
IDRF741201974	1	IDRF001903204	3	IDRF000100691	241	IDRF000100746	241
IDRF741201975	1	IDRF074316124	3	IDRF000100692	241	IDRF000100747	241
IDRF741201976	1	IDRF074317122	3	IDRF000100696	241	IDRF000100748	241
IDRF741201977	1	IDRF074403774	4	IDRF000100697	241	IDRF000100749	241
IDRF741201978	1	IDRF074403868	4	IDRF000100698	241	IDRF000100750	241
IDRF741201979	1	IDRF000000090	241	IDRF000100699	241	IDRF000100751	241
IDRF741201980	1	IDRF000000091	241	IDRF000100700	241	IDRF000100752	241
IDRF741201981	1	IDRF000000145	241	IDRF000100701	241	IDRF000100753	241
IDRF741201982	1	IDRF000000201	241	IDRF000100702	241	IDRF000100754	241
IDRF741201983	1	IDRF000100467	241	IDRF000100703	241	IDRF000100755	241
IDRF741201984	1	IDRF000100569	241	IDRF000100704	241	IDRF000100756	241
IDRF741201985	1	IDRF000100579	241	IDRF000100705	241	IDRF000100757	241
IDRF741202142	1	IDRF000100580	241	IDRF000100710	241	IDRF000100758	241
IDRF741202804	1	IDRF000100581	241	IDRF000100711	241	IDRF000100759	241
IDRF741203400	1	IDRF000100582	241	IDRF000100712	241	IDRF000100760	241
IDRF741203425	1	IDRF000100583	241	IDRF000100713	241	IDRF000100770	241
IDRF741203470	1	IDRF000100584	241	IDRF000100714	241	IDRF000100784	241

Table G-1. (continued).

Container	IDC	Container	IDC	Container	IDC	Container	IDC
IDRF000101004	241	IDRF000302762	320	IDRF003200549	330	IDRF009000067	330
IDRF000101011	241	IDRF000302862	320	IDRF003200552	330	IDRF000302496	335
IDRF000101045	241	IDRF000600133	320	IDRF003200553	330	IDRF000302760	335
IDRF000101046	241	IDRF001600027	320	IDRF003200555	330	IDRF000302881	335
IDRF000101047	241	IDRF001903756	320	IDRF003200558	330	IDRF000302886	335
IDRF000108069	241	IDRF002202825	320	IDRF003200560	330	IDRF000302942	335
IDRF000207546	241	IDRF003102301	320	IDRF003200562	330	IDRF000302950	335
IDRF070701004	241	IDRF003702184	320	IDRF003200578	330	IDRF000600039	335
IDRF077107345	241	IDRF005500080	320	IDRF003200621	330	IDRF000108287	336
IDRF077107360	241	IDRF005500317	320	IDRF003200623	330	IDRF000108413	336
IDRF077107411	241	IDRF005500347	320	IDRF003200624	330	IDRF000108432	336
IDRF077107542	241	IDRF005700002	320	IDRF003200634	330	IDRF000108492	336
IDRF077107626	241	IDRF000000192	330	IDRF003600705	330	IDRF000108577	336
IDRF077107642	241	IDRF000000193	330	IDRF003600713	330	IDRF000108946	336
IDRF077107643	241	IDRF000108402	330	IDRF003600733	330	IDRF000108961	336
IDRF077107648	241	IDRF000108405	330	IDRF003600806	330	IDRF000210017	336
IDRF077107872	241	IDRF000108636	330	IDRF003800024	330	IDRF000210185	336
IDRF077107931	241	IDRF000108988	330	IDRF004100315	330	IDRF000210187	336
IDRF077107936	241	IDRF000210213	330	IDRF004200428	330	IDRF000210188	336
IDRF077107971	241	IDRF000210214	330	IDRF004200470	330	IDRF000210233	336
IDRF077108021	241	IDRF000210219	330	IDRF004600090	330	IDRF000210257	336
IDRF077108047	241	IDRF000210274	330	IDRF005400254	330	IDRF000210262	336
IDRF077108189	241	IDRF000210451	330	IDRF005400311	330	IDRF000210275	336
IDRF077108225	241	IDRF000210517	330	IDRF005400388	330	IDRF000210329	336
IDRF077199901	241	IDRF000210644	330	IDRF005400699	330	IDRF000210371	336
IDRF077199902	241	IDRF000210742	330	IDRF006500132	330	IDRF000210419	336
IDRF077199903	241	IDRF000212296	330	IDRF006500138	330	IDRF000210428	336
IDRF077199904	241	IDRF000212375	330	IDRF007300163	330	IDRF000210440	336
IDRF077199905	241	IDRF000212572	330	IDRF007500105	330	IDRF000210473	336
IDRFOP0108069	241	IDRF000237019	330	IDRF007500141	330	IDRF000210539	336
IDRF000028829	300	IDRF000300313	330	IDRF007601086	330	IDRF000210572	336
IDRF001208778	300	IDRF000303171	330	IDRF008700073	330	IDRF000210603	336
IDRF001210964	300	IDRF001701286	330	IDRF008700074	330	IDRF000210606	336
IDRF771208428	300	IDRF001701394	330	IDRF008700078	330	IDRF000210607	336
IDRF003201274	312	IDRF001902231	330	IDRF008700081	330	IDRF000210619	336
IDRF000237675	320	IDRF001902279	330	IDRF008700082	330	IDRF000210650	336
IDRF000241714	320	IDRF001902531	330	IDRF008903643	330	IDRF000210678	336
IDRF000248270	320	IDRF003100953	330	IDRF008903719	330	IDRF000212013	336
IDRF000302391	320	IDRF003200548	330	IDRF008903765	330	IDRF000212014	336

Table G-1. (continued).

Container	IDC	Container	IDC	Container	IDC	Container	IDC
IDRF000212105	336	IDRF000600310	336	IDRF009000020	336	IDRF000600358	337
IDRF000212360	336	IDRF000600311	336	IDRF009000036	336	IDRF000600360	337
IDRF000212363	336	IDRF000600315	336	IDRF009000052	336	IDRF000600361	337
IDRF000212432	336	IDRF000600316	336	IDRF000108409	337	IDRF000600364	337
IDRF000212458	336	IDRF000600319	336	IDRF000108839	337	IDRF000600365	337
IDRF000212480	336	IDRF000600321	336	IDRF000108841	337	IDRF000600366	337
IDRF000212510	336	IDRF000600322	336	IDRF000210009	337	IDRF000600371	337
IDRF000212533	336	IDRF000600377	336	IDRF000210029	337	IDRF000600372	337
IDRF000213126	336	IDRF000600380	336	IDRF000210088	337	IDRF000600373	337
IDRF000226395	336	IDRF000600381	336	IDRF000210105	337	IDRF000600374	337
IDRF000228040	336	IDRF000600382	336	IDRF000210108	337	IDRF000600375	337
IDRF000229278	336	IDRF000600383	336	IDRF000210168	337	IDRF000600399	337
IDRF000231881	336	IDRF000600392	336	IDRF000210171	337	IDRF000600401	337
IDRF000246901	336	IDRF000600395	336	IDRF000210172	337	IDRF000600407	337
IDRF000500002	336	IDRF000600397	336	IDRF000210246	337	IDRF000600429	337
IDRF000600036	336	IDRF000600400	336	IDRF000210279	337	IDRF001701501	337
IDRF000600067	336	IDRF000600402	336	IDRF000210297	337	IDRF002600029	337
IDRF000600072	336	IDRF000600403	336	IDRF000210312	337	IDRF003100310	337
IDRF000600074	336	IDRF000600404	336	IDRF000210354	337	IDRF003100358	337
IDRF000600076	336	IDRF000600405	336	IDRF000210355	337	IDRF003100360	337
IDRF000600128	336	IDRF000600408	336	IDRF000210458	337	IDRF003100906	337
IDRF000600132	336	IDRF000600415	336	IDRF000213221	337	IDRF003100933	337
IDRF000600161	336	IDRF000600420	336	IDRF000600275	337	IDRF004200095	337
IDRF000600179	336	IDRF000600425	336	IDRF000600326	337	IDRF004200100	337
IDRF000600196	336	IDRF002500098	336	IDRF000600329	337	IDRF004200101	337
IDRF000600205	336	IDRF002500099	336	IDRF000600331	337	IDRF004200193	337
IDRF000600206	336	IDRF002500100	336	IDRF000600332	337	IDRF004200266	337
IDRF000600220	336	IDRF003700697	336	IDRF000600333	337	IDRF004200355	337
IDRF000600226	336	IDRF008903384	336	IDRF000600336	337	IDRF004200457	337
IDRF000600279	336	IDRF008903388	336	IDRF000600341	337	IDRF004300010	337
IDRF000600288	336	IDRF008903391	336	IDRF000600342	337	IDRF004300011	337
IDRF000600290	336	IDRF008903392	336	IDRF000600343	337	IDRF004300012	337
IDRF000600297	336	IDRF008903559	336	IDRF000600344	337	IDRF004300014	337
IDRF000600298	336	IDRF008903571	336	IDRF000600346	337	IDRF006500109	337
IDRF000600301	336	IDRF008903610	336	IDRF000600347	337	IDRF008903886	338
IDRF000600302	336	IDRF008903614	336	IDRF000600348	337	IDRF001900730	339
IDRF000600305	336	IDRF008903710	336	IDRF000600353	337	IDRF001901286	339
IDRF000600306	336	IDRF008903741	336	IDRF000600355	337	IDRF001901287	339
IDRF000600309	336	IDRF008903758	336	IDRF000600357	337	IDRF001901851	339

Table G-1. (continued).

Container	IDC	Container	IDC	Container	IDC	Container	IDC
IDRF001904190	339	IDRF004100636	376	IDRF004102151	376	IDRF000302751	409
IDRF002300617	339	IDRF004100637	376	IDRF004200102	377	IDRF000302774	409
IDRF003900011	339	IDRF004100638	376	IDRF004200176	377	IDRF000302776	409
IDRF005300036	339	IDRF004100639	376	IDRF004200201	377	IDRF000302788	409
IDRF008600055	339	IDRF004100640	376	IDRF004200205	377	IDRF000302800	409
IDRF008600063	339	IDRF004100641	376	IDRF004200208	377	IDRF000302863	409
IDRF008600087	339	IDRF004100642	376	IDRF004200265	377	IDRF000302871	409
IDRF007100427	374	IDRF004100643	376	IDRF004600097	377	IDRF000302908	409
IDRF000248547	376	IDRF004100644	376	IDRF005200076	377	IDRF000302958	409
IDRF000302685	376	IDRF004100645	376	IDRF005300103	377	IDRF000302999	409
IDRF004002093	376	IDRF004100646	376	IDRF008700071	377	IDRF000303017	409
IDRF004002094	376	IDRF004101142	376	IDRF008700072	377	IDRF000303165	409
IDRF004002186	376	IDRF004101143	376	IDRF008700076	377	IDRF000303166	409
IDRF004002187	376	IDRF004101159	376	IDRF008700079	377	IDRF002500458	409
IDRF004002224	376	IDRF004101179	376	IDRF008700080	377	IDRF004600056	410
IDRF004002307	376	IDRF004101180	376	IDRF000400248	391	IDRF004600061	410
IDRF004002308	376	IDRF004101198	376	IDRF004600003	391	IDRF004600062	410
IDRF004002394	376	IDRF004101201	376	IDRF004600052	391	IDRF005200068	410
IDRF004002565	376	IDRF004101202	376	IDRF004600070	391	IDRF000105223	411
IDRF004002569	376	IDRF004101203	376	IDRF004600071	391	IDRF000105316	414
IDRF004002579	376	IDRF004101204	376	IDRF004600072	391	IDRF000302967	414
IDRF004100321	376	IDRF004101290	376	IDRF004600073	391	IDRF005400298	416
IDRF004100322	376	IDRF004101291	376	IDRF004600074	391	IDRF007500120	425
IDRF004100367	376	IDRF004101351	376	IDRF004600086	391	IDRF000221117	432
IDRF004100368	376	IDRF004101354	376	IDRF004600098	391	IDRF000227674	432
IDRF004100369	376	IDRF004101363	376	IDRF004600104	391	IDRF000228693	432
IDRF004100370	376	IDRF004101408	376	IDRF005200067	391	IDRF000228694	432
IDRF004100371	376	IDRF004101514	376	IDRF005400288	391	IDRF000230228	432
IDRF004100372	376	IDRF004101526	376	IDRF005400296	391	IDRF000231040	432
IDRF004100373	376	IDRF004101527	376	IDRF000302719	409	IDRF000236837	432
IDRF004100374	376	IDRF004101528	376	IDRF000302720	409	IDRF000600049	432
IDRF004100532	376	IDRF004101557	376	IDRF000302721	409	IDRF000600077	432
IDRF004100533	376	IDRF004101740	376	IDRF000302722	409	IDRF000600079	432
IDRF004100534	376	IDRF004101850	376	IDRF000302723	409	IDRF000600080	432
IDRF004100631	376	IDRF004101851	376	IDRF000302725	409	IDRF000600081	432
IDRF004100632	376	IDRF004101852	376	IDRF000302728	409	IDRF000600111	432
IDRF004100633	376	IDRF004101858	376	IDRF000302729	409	IDRF000600119	432
IDRF004100634	376	IDRF004101952	376	IDRF000302735	409	IDRF000600122	432
IDRF004100635	376	IDRF004102134	376	IDRF000302736	409	IDRF000600124	432

Table G-1. (continued).

Container	IDC	Container	IDC	Container	IDC	Container	IDC
IDRF000600129	432	IDRF008700064	432	IDRF000600284	440	IDRF000238185	442
IDRF000600135	432	IDRF008700065	432	IDRF000600317	440	IDRF000501889	442
IDRF000600137	432	IDRF008700066	432	IDRF000600422	440	IDRF000501890	442
IDRF000600162	432	IDRF008700067	432	IDRF002800437	440	IDRF000501891	442
IDRF000600163	432	IDRF008700068	432	IDRF002800459	440	IDRF000501892	442
IDRF000600165	432	IDRF008700069	432	IDRF002800500	440	IDRF000501893	442
IDRF000600167	432	IDRF008700070	432	IDRF002800614	440	IDRF000501894	442
IDRF000600169	432	IDRF000212714	440	IDRF002800671	440	IDRF000501895	442
IDRF000600170	432	IDRF000225454	440	IDRF002900221	440	IDRF000501896	442
IDRF000600171	432	IDRF000237291	440	IDRF002900363	440	IDRF000501897	442
IDRF000600173	432	IDRF000238710	440	IDRF002900412	440	IDRF000501898	442
IDRF000600177	432	IDRF000302382	440	IDRF002900738	440	IDRF000501899	442
IDRF000600178	432	IDRF000302383	440	IDRF002901240	440	IDRF000501900	442
IDRF000600180	432	IDRF000302384	440	IDRF003702093	440	IDRF000501901	442
IDRF000600181	432	IDRF000302385	440	IDRF003702096	440	IDRF000501902	442
IDRF000600183	432	IDRF000302401	440	IDRF003702123	440	IDRF000501904	442
IDRF000600184	432	IDRF000302402	440	IDRF003702195	440	IDRF000501905	442
IDRF000600185	432	IDRF000302416	440	IDRF003702208	440	IDRF000501906	442
IDRF000600186	432	IDRF000302417	440	IDRF003702210	440	IDRF000501909	442
IDRF000600187	432	IDRF000302418	440	IDRF003702288	440	IDRF000600268	442
IDRF000600188	432	IDRF000302419	440	IDRF003702313	440	IDRF000108960	480
IDRF000600189	432	IDRF000302420	440	IDRF003702441	440	IDRF000210223	480
IDRF000600190	432	IDRF000302421	440	IDRF003702616	440	IDRF000210307	480
IDRF000600191	432	IDRF000302422	440	IDRF004200264	440	IDRF000210367	480
IDRF000600192	432	IDRF000302433	440	IDRF007100201	440	IDRF000210385	480
IDRF000600193	432	IDRF000302443	440	IDRF009200462	440	IDRF000212827	480
IDRF000600194	432	IDRF000302537	440	IDRF000600250	441	IDRF000213185	480
IDRF000600195	432	IDRF000302701	440	IDRF000600251	441	IDRF000231292	480
IDRF000600203	432	IDRF000302883	440	IDRF000600252	441	IDRF000231352	480
IDRF000600204	432	IDRF000302962	440	IDRF000600253	441	IDRF000232365	480
IDRF000600328	432	IDRF000302973	440	IDRF000600254	441	IDRF000232379	480
IDRF000620035	432	IDRF000600090	440	IDRF000600255	441	IDRF000232671	480
IDRF000620038	432	IDRF000600095	440	IDRF000600256	441	IDRF000233792	480
IDRF000620041	432	IDRF000600100	440	IDRF000600257	441	IDRF000234050	480
IDRF000620045	432	IDRF000600105	440	IDRF007601038	441	IDRF000234414	480
IDRF004100318	432	IDRF000600108	440	IDRF007601039	441	IDRF000234480	480
IDRF008700058	432	IDRF000600146	440	IDRF007601040	441	IDRF000234770	480
IDRF008700061	432	IDRF000600208	440	IDRF007601041	441	IDRF000234994	480
IDRF008700062	432	IDRF000600262	440	IDRF007601042	441	IDRF000235293	480

Table G-1. (continued).

Container	IDC	Container	IDC	Container	IDC	Container	IDC
IDRF000600107	480	IDRF002400341	480	IDRF004200268	480	IDRF001901376	481
IDRF000600109	480	IDRF002400391	480	IDRF004500389	480	IDRF001901401	481
IDRF000600110	480	IDRF002401782	480	IDRF004500421	480	IDRF001901404	481
IDRF000600114	480	IDRF002401783	480	IDRF004800016	480	IDRF001901410	481
IDRF000600117	480	IDRF002401784	480	IDRF005400455	480	IDRF001901414	481
IDRF000600152	480	IDRF002500119	480	IDRF006600167	480	IDRF001901416	481
IDRF000600160	480	IDRF002800623	480	IDRF007601045	480	IDRF001901421	481
IDRF001600015	480	IDRF002800719	480	IDRF007800160	480	IDRF001901430	481
IDRF001704829	480	IDRF002900341	480	IDRF008904026	480	IDRF001901431	481
IDRF001905169	480	IDRF003100617	480	IDRF03100768A	480	IDRF001901450	481
IDRF001907337	480	IDRF003100775	480	IDRF038988932	480	IDRF001901521	481
IDRF002100043	480	IDRF003100812	480	IDRF038988940	480	IDRF001901565	481
IDRF002201038	480	IDRF003100947	480	IDRF038988946	480	IDRF001901607	481
IDRF002201424	480	IDRF003100985	480	IDRF038988956	480	IDRF001901823	481
IDRF002301631	480	IDRF003101072	480	IDRF038988962	480	IDRF001902039	481
IDRF002301658	480	IDRF003101220	480	IDRF038988966	480	IDRF007603739	481
IDRF002301691	480	IDRF003101338	480	IDRF038989270	480	IDRF008022687	488
IDRF002400185	480	IDRF003101413	480	IDRF000228677	481	IDRF741206096	800
IDRF002400260	480	IDRF004200110	480	IDRF000600064	481	IDRF741207004	800
IDRF002400290	480	IDRF004200240	480	IDRF001901371	481	IDRF074602913	900
IDRF002400329	480	IDRF004200257	480	IDRF001901372	481	IDRF074602916	900